SONY

VIDEOCASSETTE RECORDER

UVW-1400
UVW-1400P

VIDEOCASSETTE PLAYER

UVW-1200
UVW-1200P

SERVICE MANUAL

Volume 2 1st Edition (Revised 2)

BETACAM SP

For customers in the USA

WARNING

This equipment has been tested and found to comply with the limits for a Class A digital device, pursuant to Part 15 of the FCC Rules. These limits are designed to provide reasonable protection against harmful interference when the equipment is operated in a commercial environment. This equipment generates, uses, and can radiate radio frequency energy and, if not installed and used in accordance with the instruction manual, may cause harmful interference to radio communications. Operation of this equipment in a residential area is likely to cause harmful interference in which case the user will be required to correct the interference at his own expense.

You are cautioned that any changes or modifications not expressly approved in this manual could void your authority to operate this equipment.

The shielded interface cable recommended in this manual must be used with this equipment in order to comply with the limits for a digital device pursuant to Subpart B of Part 15 of FCC Rules.

This symbol is intended to alert the user to the presence of important operating and maintenance (servicing) instructions in the literature accompanying the appliance.

WARNING: Using this unit at a voltage other than 120 V may require the use of a different line cord or attachment plug, or both.
To reduce the risk of fire or electric shock, refer servicing to qualified service personnel.

For customers in Canada
This apparatus complies with the Class A limits for radio noise emissions set out in Radio Interference Regulations.

Pour les utilisateurs au Canada
Cet appareil est conforme aux normes Classe A pour bruits radioélectriques, spécifiées dans le Règlement sur le brouillage radioélectrique.

このマニュアルに記載されている事柄の著作権は当社にあり，説明内容は機器購入者の使用を目的としています。
従って，当社の許可なしに無断で複写したり，説明内容(操作，保守等）と異なる目的で本マニュアルを使用することを禁止します。

The material contained in this manual consists of information that is the property of Sony Corporation and is intended solely for use by the purchasers of the equipment described in this manual.
Sony Corporation expressly prohibits the duplication of any portion of this manual or the use thereof for any purpose other than the operation or maintenance of the equipment described in this manual without the express written permission of Sony Corporation.

Le matériel contenu dans ce manuel consiste en informations qui sont la propriété de Sony Corporation et sont destinées exclusivement a l'usage des acquéreurs de l'équipement décrit dans ce manuel.
Sony Corporation interdit formellement la copie de quelque partie que ce soit de ce manuel ou son emploi pour tout autre but que des opérations ou entretiens de l'équipement à moins d'une permission écrite de Sony Corporation.

Das in dieser Anleitung enthaltene Material besteht aus Informationen, die Eigentum der Sony Corporation sind, und ausschließlich zum Gebrauch durch den Käufer der in dieser Anleitung beschriebenen Ausrüstung bestimmt sind.
Die Sony Corporation untersagt ausdrücklich die Vervielfältigung jeglicher Teile dieser Anleitung oder den Gebrauch derselben für irgendeinen anderen Zweck als die Bedienung oder Wartung der in dieser Anleitung beschriebenen Ausrüstung ohne ausdrückliche schriftliche Erlaubnis der Sony Corporation.

このマニュアルについて

本書は、カセットレコーダ UVW-1400 およびカセットプレーヤ UVW-1200 のサービスマニュアル VOL. 2 です。
本書では、ブロックダイヤグラム、マウント図、回路図、パーツリストを記載しています。

構　成

本書の構成を把握していただくために、全章の概略を以下に説明します。

第14章　BLOCK DIAGRAMS

第15章　BOARD LAYOUTS

第16章　SCHEMATIC DIAGRAMS

第17章　SEMICONDUCTOR PIN ASSIGNMENTS

第18章　SPARE PARTS AND OPTIONAL FIXTURES

Introducing this manual

This manual is the Service Manual Vol. 2 of the video cassette recorder model UVW-1400/1400P and the video cassette player model UVW-1200/1200P.
This manual contains block diagrams, board layouts, schematic diagrams, parts lists.

Contains

The sections covered in the manual are summarized below to give you a general understanding of the manual.

Section 14　BLOCK DIAGRAMS

Section 15　BOARD LAYOUTS

Section 16　SCHEMATIC DIAGRAMS

Section 17　SEMICONDUCTOR PIN ASSIGNMENTS

Section 18　SPARE PARTS AND OPTIONAL FIXTURES

関連マニュアル

本機には、この「サービスマニュアル VOL. 2」の他に、下記のマニュアルが用意されています。

• オペレーションマニュアル（本機に付属しています）
本機を実際に運用および操作するのに必要な情報を記載しています。

• インストレーションマニュアル（本機に付属していません）
本機の設置時に必要なラックマウント、周辺機器との接続の際のコネクター情報等を記載しています。

• サービスマニュアル vol.1（本機に付属していません）
本機の保守に関する情報と、部品交換および調整などのサービスに関する情報を記載しています。

• プロトコルマニュアル（本機に付属しています）
RS-232C方式に準拠した25ピンプロトコルの情報を記載しています。

Related manuals

In addition to this Service Manual Vol. 2, the following manuals are provided.

• Operation Manual (Supplied with equipment)
Explains how to operate this equipment.

• Installation Manual (Not supplied with equipment)
Contains rack mount information necessary for installation of the equipment, the connector information necessary for connecting the unit with peripherals and others.

• Service Manual Vol. 1 (Not supplied with equipment)
Contains the maintenance information and servicing information necessary for parts replacement and adjustment.

• Protocol Manual (Supplied with equipment)
Contains the 25-pin protocol information with based on RS-232C specification.

Table of Contents

Volume 1

1. **Operating Instruction**
2. **Installation**
3. **Service Overview**
4. **Maintenance Menu**
5. **Periodic Maintenance and Inspection**
6. **Replacement of Mechanical Parts**
7. **Tape Path Alignment**
8. **Electrical Alignment Overview**
9. **Power Supply and System Control Alignment**
10. **Servo Alignment**
11. **Audio Alignment**
12. **Video Alignment**
13. **Electrical Alignment After Replacement Boards**

Volume 2

14. Block Diagrams

Overall 14-2
CTDM, DEC 14-5
RF 14-8
Demod., PB, PE, EQ 14-9
Encode Output 14-12
TBC, CTDM 14-13
Audio 14-20
System Control 14-23
Servo 14-26
Power Supply 14-30

15. Board Layouts

Index 15-1
AP-31B/31BP 15-4
AP-34/34P 15-6
AR-14A/14AP 15-8
CP-225B 15-10
CP-225C 15-11
CP-226A/226AJ, CP-226/226J 15-12
CP-239 15-13
DR-214 15-14
KY-290 15-16
KY-290A 15-18
MS-39/39A 15-20
RP-70B/70BP 15-22
SS-53A 15-24
TBC-28/28P 15-28
VP-44/44A/44P/44AP 15-32
VRA-5A/5AP 15-36
Frame (1) CL, HP, PC, PD 15-40
Frame (2) PTC, RM, SE, TR, VR 15-41
SOPS-1045AC/1045M/1046M 15-43
MB-520/520P 15-44
MB-520A/520AP 15-46
MB-471B 15-47

16. Schematic Diagrams

Index 16-1
AP-31B/31BP 16-5
AP-34/34P 16-15
AR-14A/14AP 16-22
CP-225B/225C 16-30
CP-226/226A/226J/226AJ 16-31
DR-214 16-32
KY-290 16-36
KY-290A 16-38
MS-39/39A 16-40
RP-70B/70BP 16-42
SS-53A 16-46
TBC-28/28P 16-57
VP-44/44A/44P/44AP 16-72
VRA-5A/5AP 16-91
SOPS-1045 16-104
SOPS-1046 16-105
MB-471B 16-106
MB-520/520A/520P/520AP 16-110
FRAME 16-118

17. Semiconductor Pin Assignments

18. Replaceable Parts and Optional Fixtures

18-1. Note on Repair Parts 18-1
18-2. Exploded Views 18-2
Reel Chassis (1) 18-4
Loarding Ring 18-6
Reel Chassis (2) 18-8
Drum &Tension Regulator Assembly 18-10
DR-214 Board Assembly 18-12
Press Assy, Pinch 18-14
Cassette Compartment Assembly 18-16
Chassis & Ornamental Panel Block 18-18
Card Rack Block (1) 18-20
Card Rack Block (2) 18-22
Chassis Block 18-24
Connector Panel Block 18-26
18-3. Electrical Parts List 18-29
18-4. Packing Materials & Supplied Accessories 18-162
18-5. Optional Fixtures 18-163

Section 14
Block Diagrams

OVERALL(1/2)

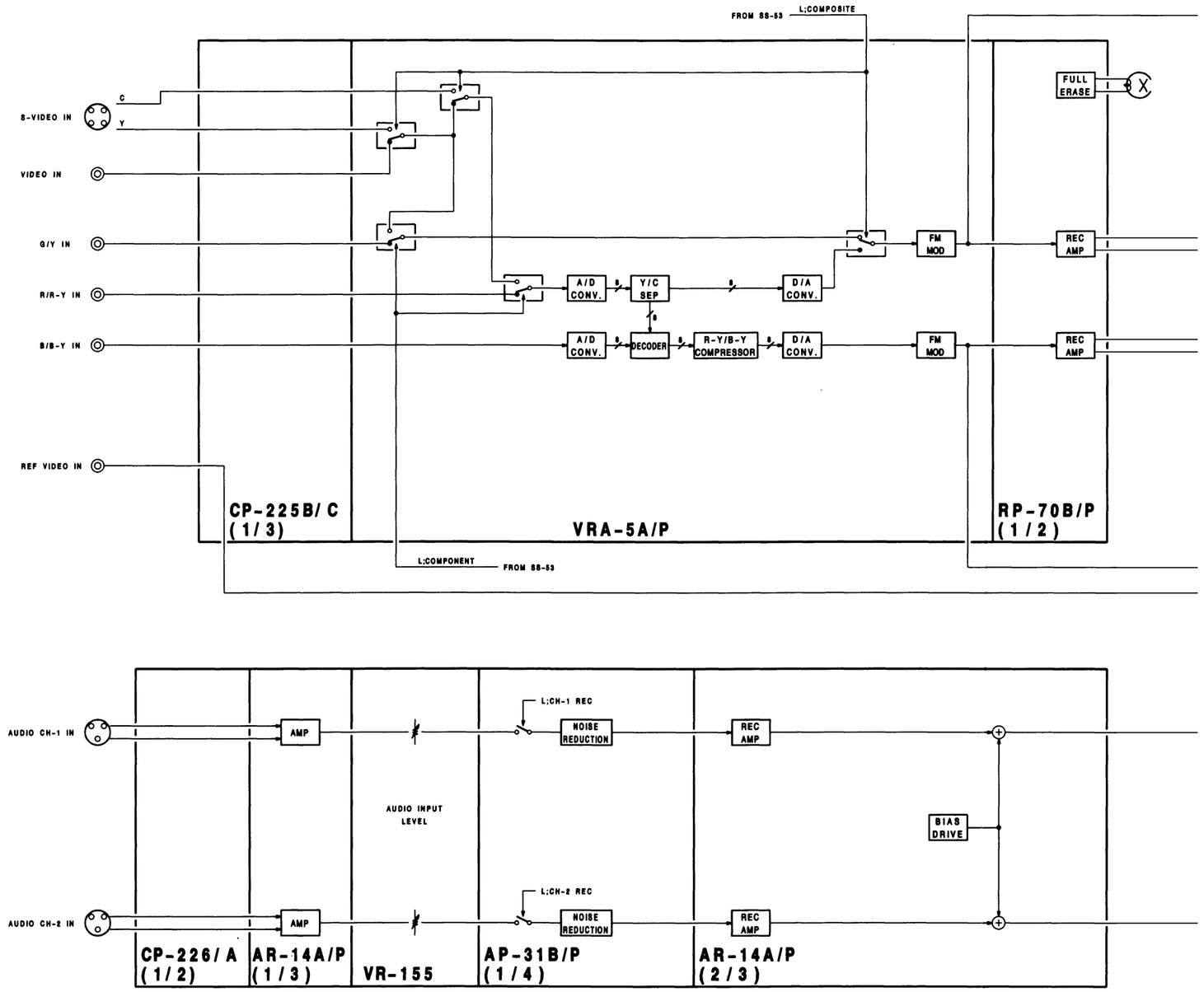
FROM SS-53
L;COMPOSITE
FULL ERASE
S-VIDEO IN
C
Y
VIDEO IN
G/Y IN
R/R-Y IN
B/B-Y IN
A/D CONV.
Y/C SEP
D/A CONV.
FM MOD
REC AMP
A/D CONV.
DECODER
R-Y/B-Y COMPRESSOR
D/A CONV.
FM MOD
REC AMP
REF VIDEO IN
CP-225B/C (1/3)
VRA-5A/P
RP-70B/P (1/2)
L;COMPONENT
FROM SS-53
AUDIO CH-1 IN
AMP
L;CH-1 REC
NOISE REDUCTION
REC AMP
AUDIO INPUT LEVEL
BIAS DRIVE
AUDIO CH-2 IN
AMP
L;CH-2 REC
NOISE REDUCTION
REC AMP
CP-226/A (1/2)
AR-14A/P (1/3)
VR-155
AP-31B/P (1/4)
AR-14A/P (2/3)

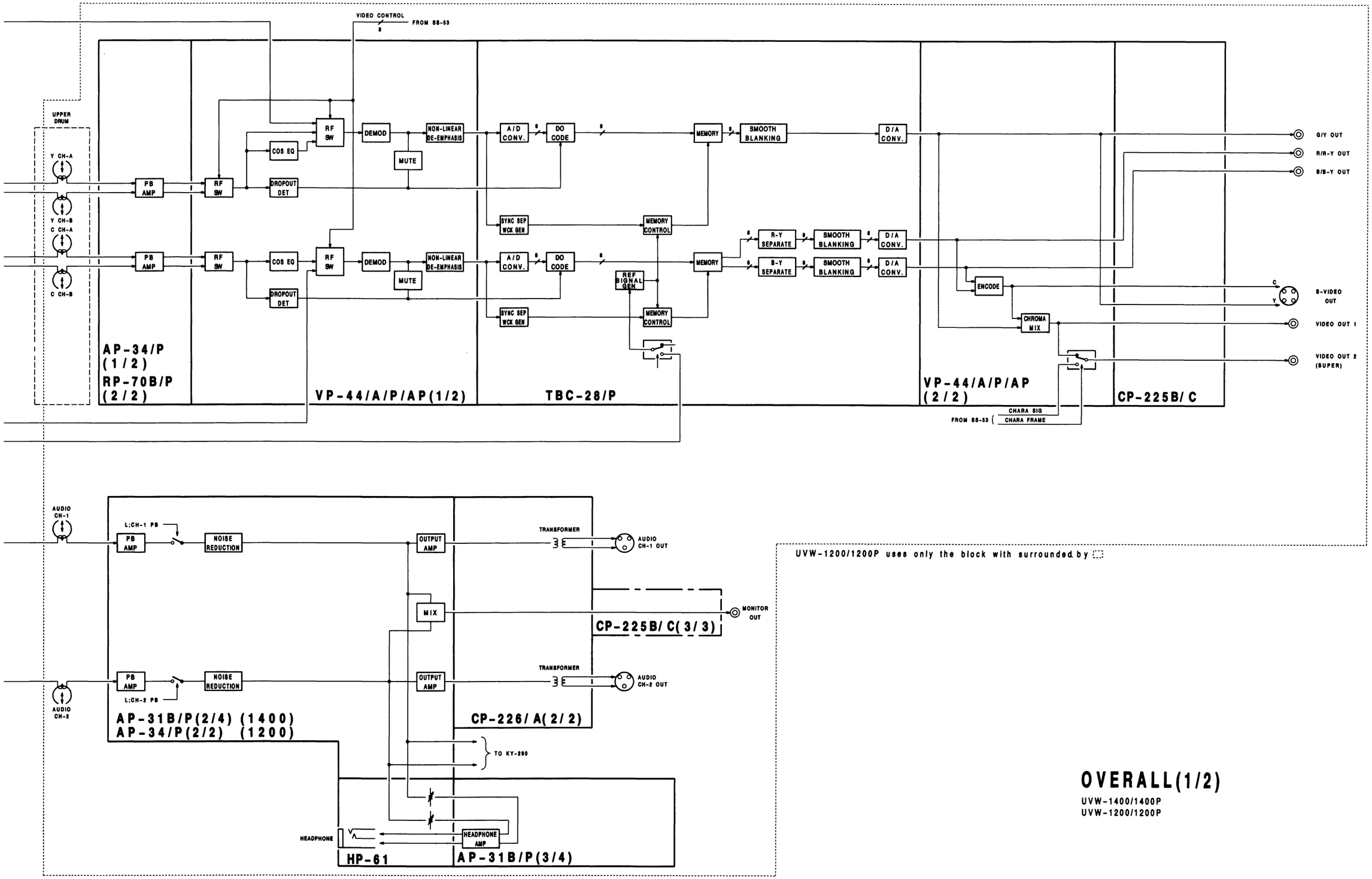

UVW-1200/1200P uses only the block with surrounded by ⬚

OVERALL(1/2)

UVW-1400/1400P
UVW-1200/1200P

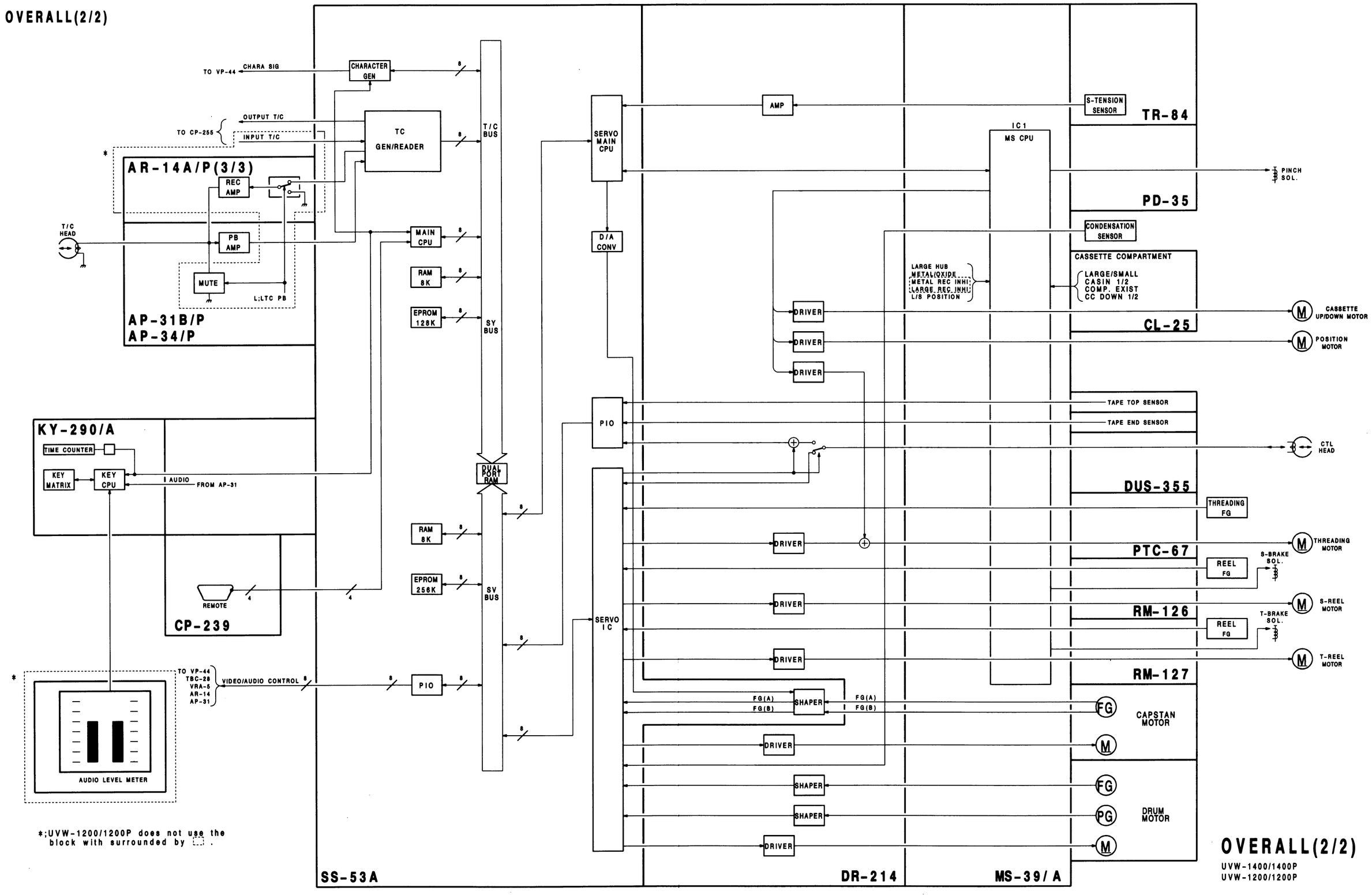
OVERALL(2/2)
TO VP-44
CHARA SIG
CHARACTER GEN
8
T/C BUS
OUTPUT T/C
TO CP-255
INPUT T/C
TC GEN/READER
*
AR-14A/P(3/3)
REC AMP
T/C HEAD
PB AMP
MUTE
L;LTC PB
AP-31B/P
AP-34/P
MAIN CPU
RAM 8K
EPROM 128K
SY BUS
SERVO MAIN CPU
AMP
S-TENSION SENSOR
TR-84
IC1
MS CPU
PINCH SOL.
PD-35
D/A CONV
CONDENSATION SENSOR
CASSETTE COMPARTMENT
LARGE HUB
METAL(OXIDE
METAL REC INHI
LARGE REC INHI
L/S POSITION
LARGE/SMALL
CASIN 1/2
COMP. EXIST
CC DOWN 1/2
DRIVER
DRIVER
DRIVER
CASSETTE UP/DOWN MOTOR
POSITION MOTOR
CL-25
TAPE TOP SENSOR
TAPE END SENSOR
PIO
CTL HEAD
DUS-355
THREADING FG
KY-290/A
TIME COUNTER
KEY MATRIX
KEY CPU
AUDIO
FROM AP-31
DUAL PORT RAM
RAM 8K
EPROM 256K
SV BUS
DRIVER
THREADING MOTOR
PTC-67
REEL FG
S-BRAKE SOL.
S-REEL MOTOR
RM-126
T-BRAKE SOL.
T-REEL MOTOR
REMOTE
4
CP-239
SERVO I C
RM-127
TO VP-44
TBC-28
VRA-5
AR-14
AP-31
VIDEO/AUDIO CONTROL
PIO
FG(A)
FG(B)
SHAPER
FG(A)
FG(B)
CAPSTAN MOTOR
DRIVER
SHAPER
SHAPER
DRUM MOTOR
DRIVER
AUDIO LEVEL METER
*;UVW-1200/1200P does not use the block with surrounded by ⬚ .
SS-53A
DR-214
MS-39/A
OVERALL(2/2)
UVW-1400/1400P
UVW-1200/1200P

For J,UC

① TP101 REC/EE (COMPOSITE)

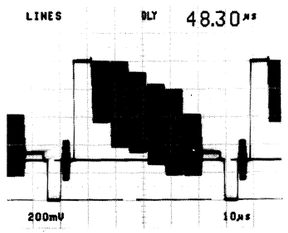

① TP101 REC/EE (COMPONENT)

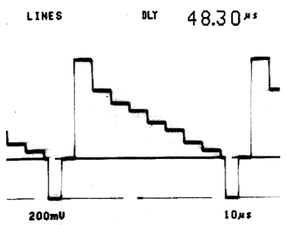

② TP201 REC/EE (COMPOSITE)

② TP201 REC/EE (COMPONENT)

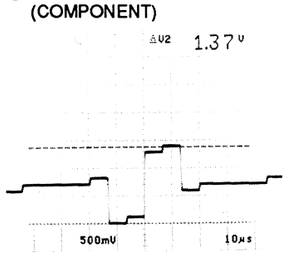

③ TP202 REC/EE (COMPONENT)

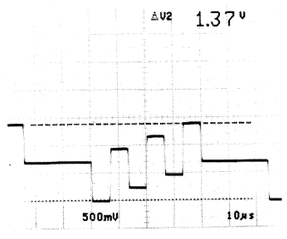

④ TP305 REC/EE

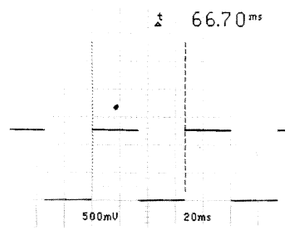

⑤ TP502 REC/EE

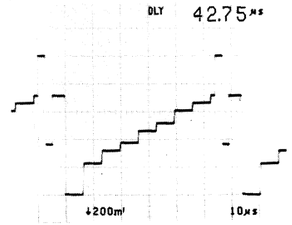

⑥ TP602 REC/EE

⑦ TP503 REC/EE
TP603 REC/EE

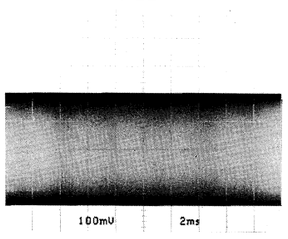

For EK

① TP101 REC/EE (COMPOSITE)

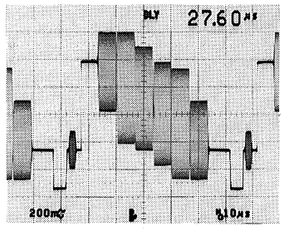

① TP101 REC/EE (COMPONENT)

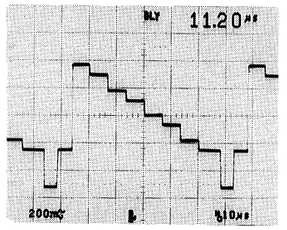

② TP201 REC/EE (COMPOSITE)

② TP201 REC/EE (COMPONENT)

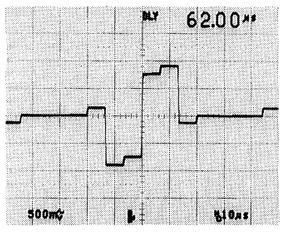

③ TP202 REC/EE (COMPONENT)

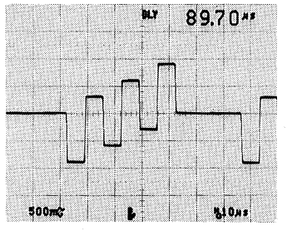

④ TP305 REC/EE

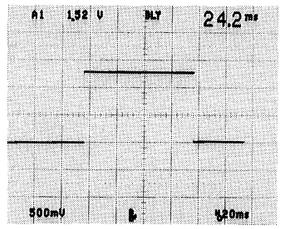

⑤ TP502 REC/EE

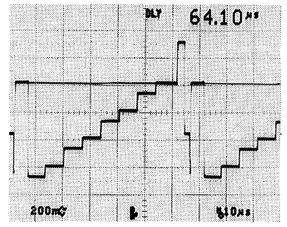

⑥ TP602 REC/EE

⑦ TP503 REC/EE
TP603 REC/EE

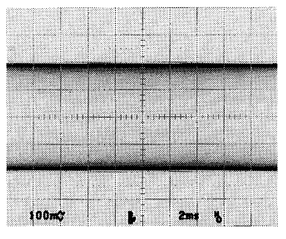

Y/C REC PROCESS(DECODE,MOD.),CTDM

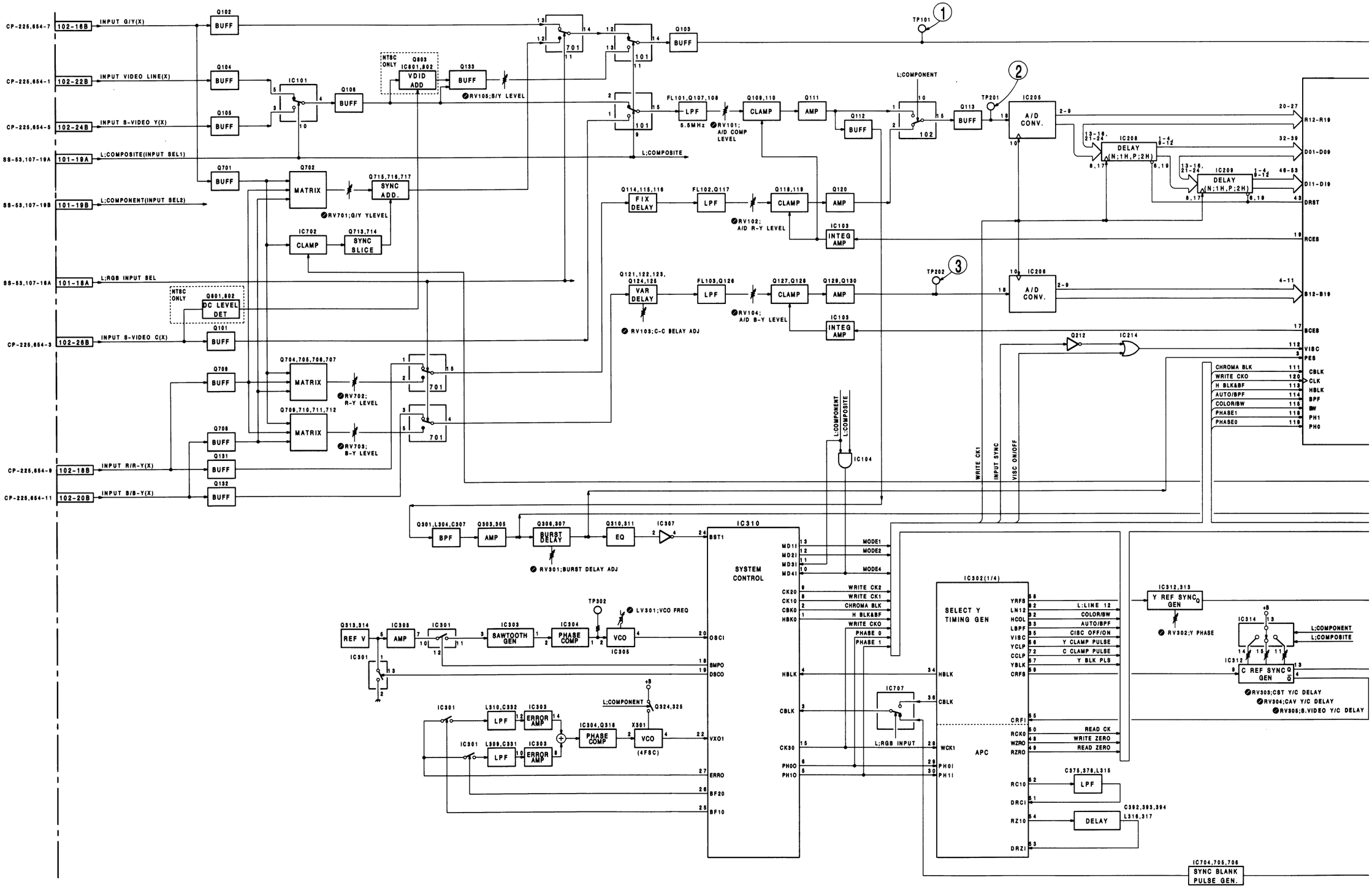

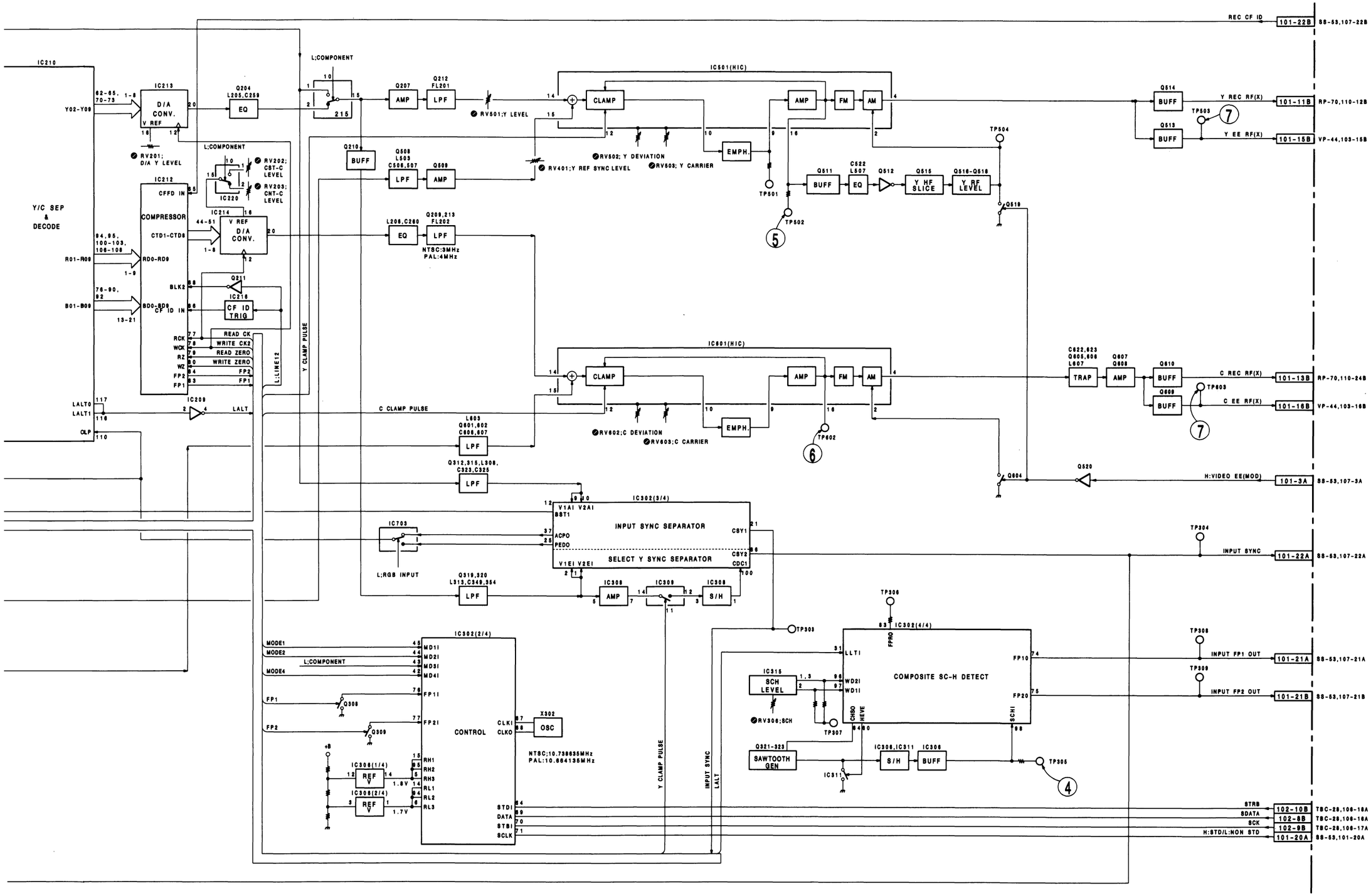

VRA-5A/P
UVW-1400/1400P

RF REC/PB AMPLIFIER

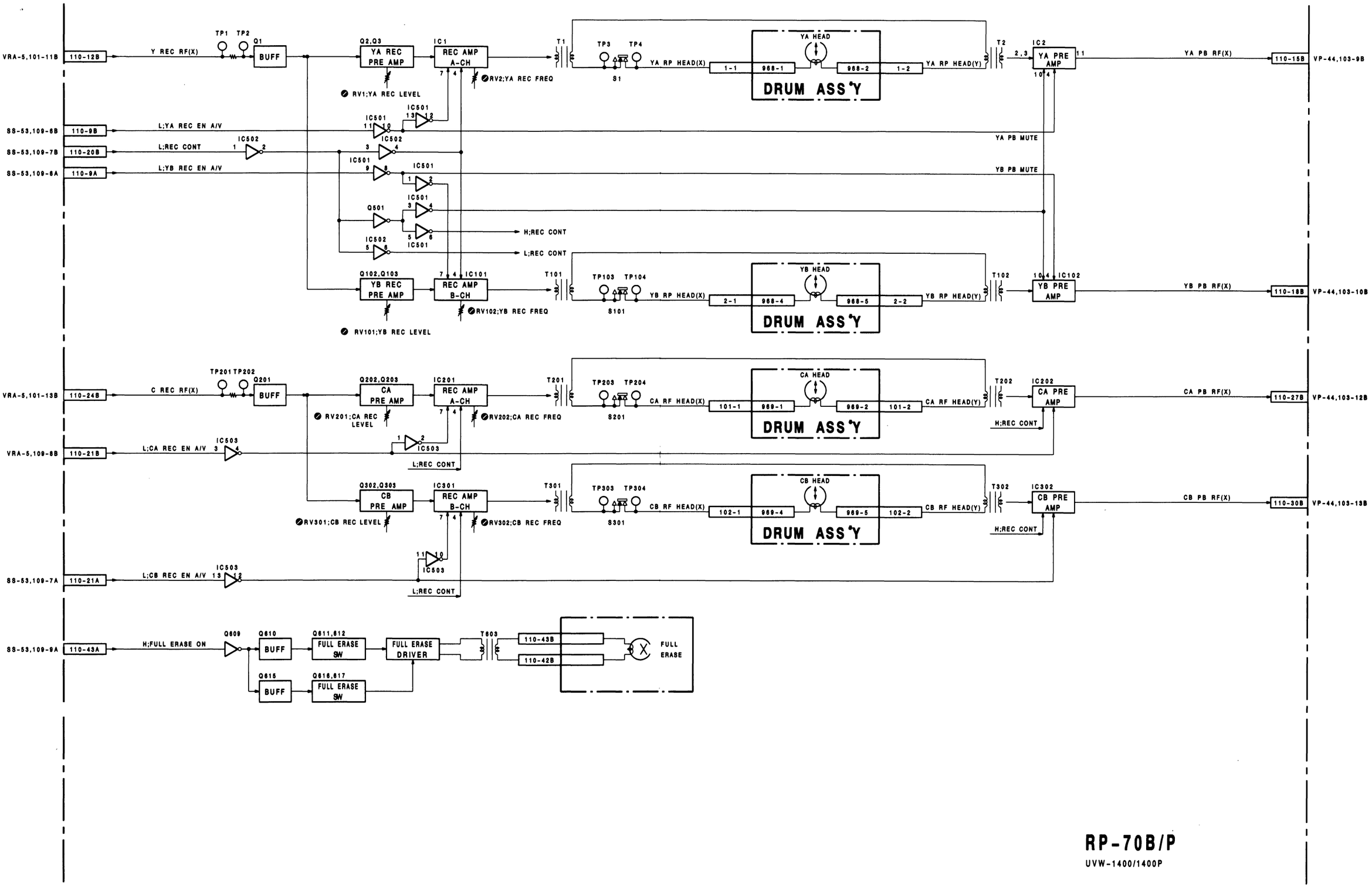

RP-70B/P

UVW-1400/1400P

For J,UC

① TP201 PB

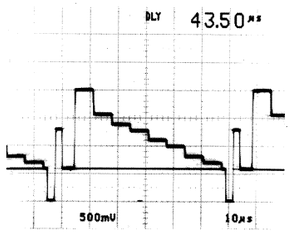

② TP401 PB

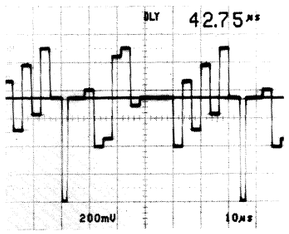

For EK

① TP201 PB

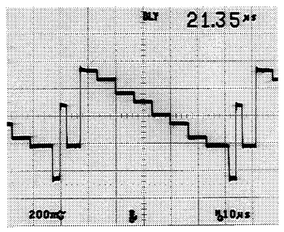

② TP401 PB

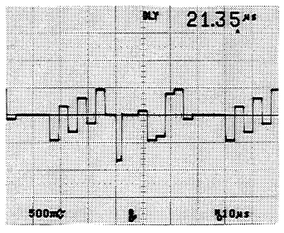

PB RF EQ,DEMODULATOR

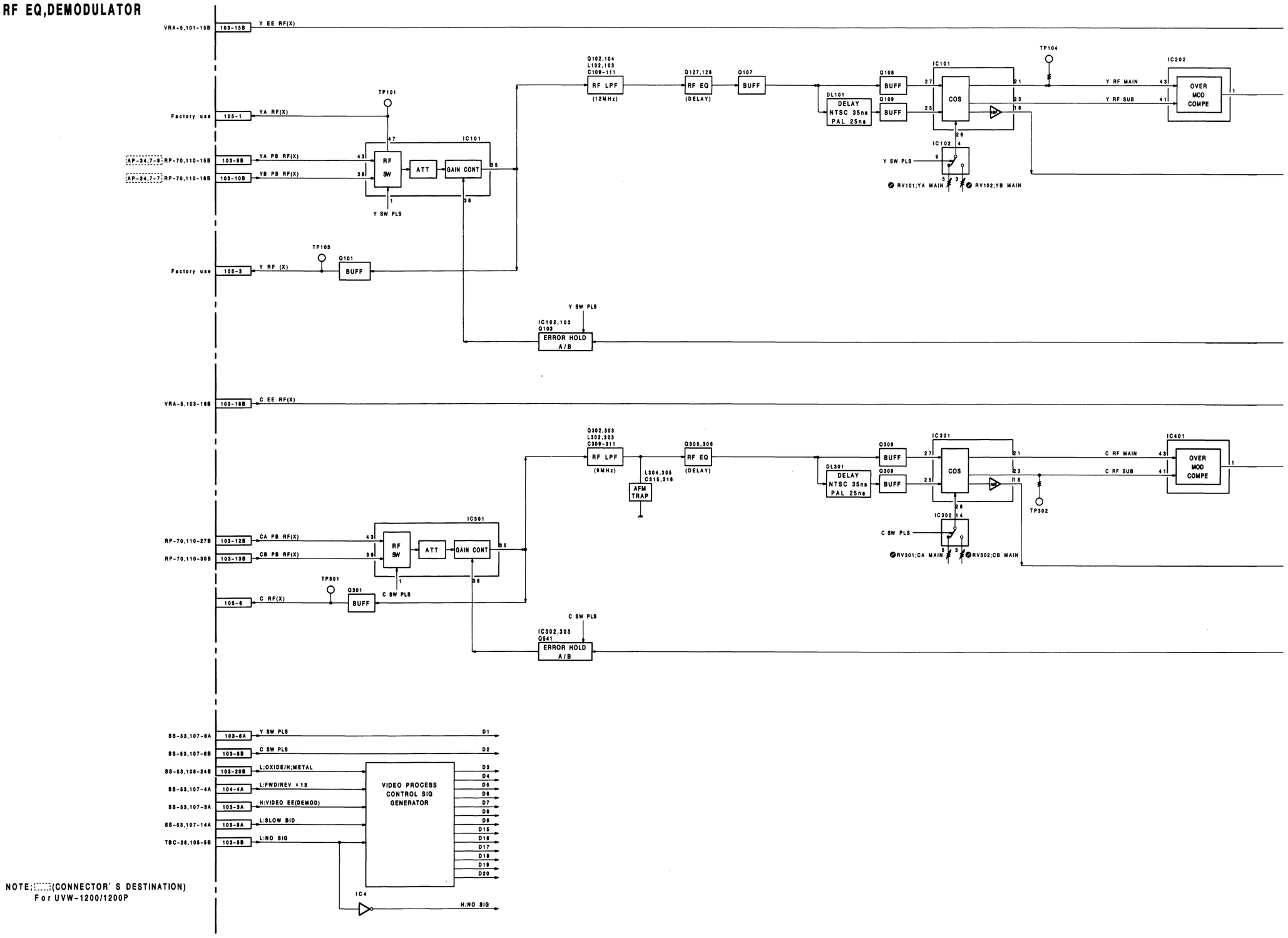

NOTE: (CONNECTOR' S DESTINATION)
For UVW-1200/1200P

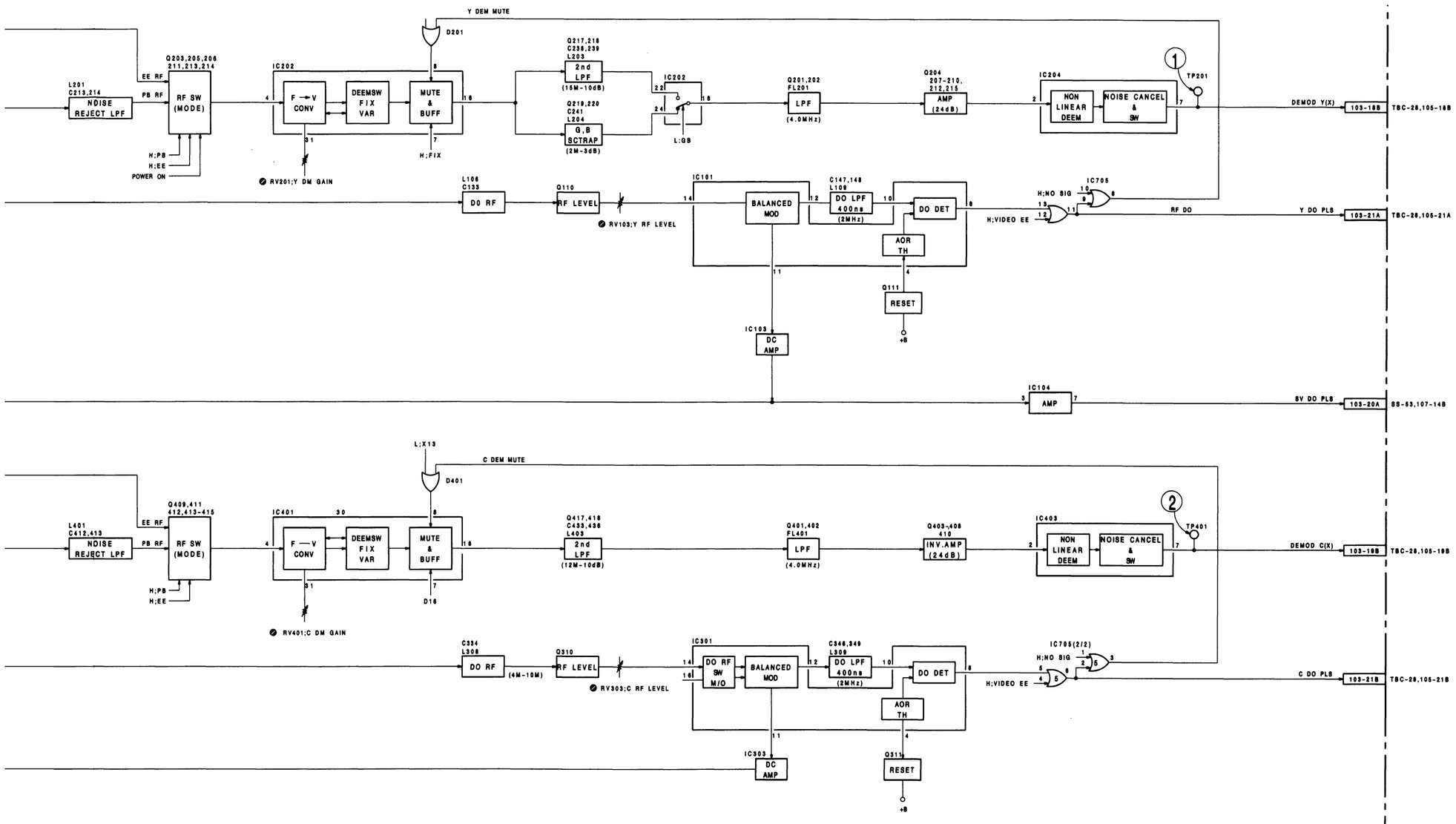

VP-44/A/P/AP(1/2)

UVW-1400/1400P
UVW-1200/1200P

ENCODE, OUTPUT DRIVER

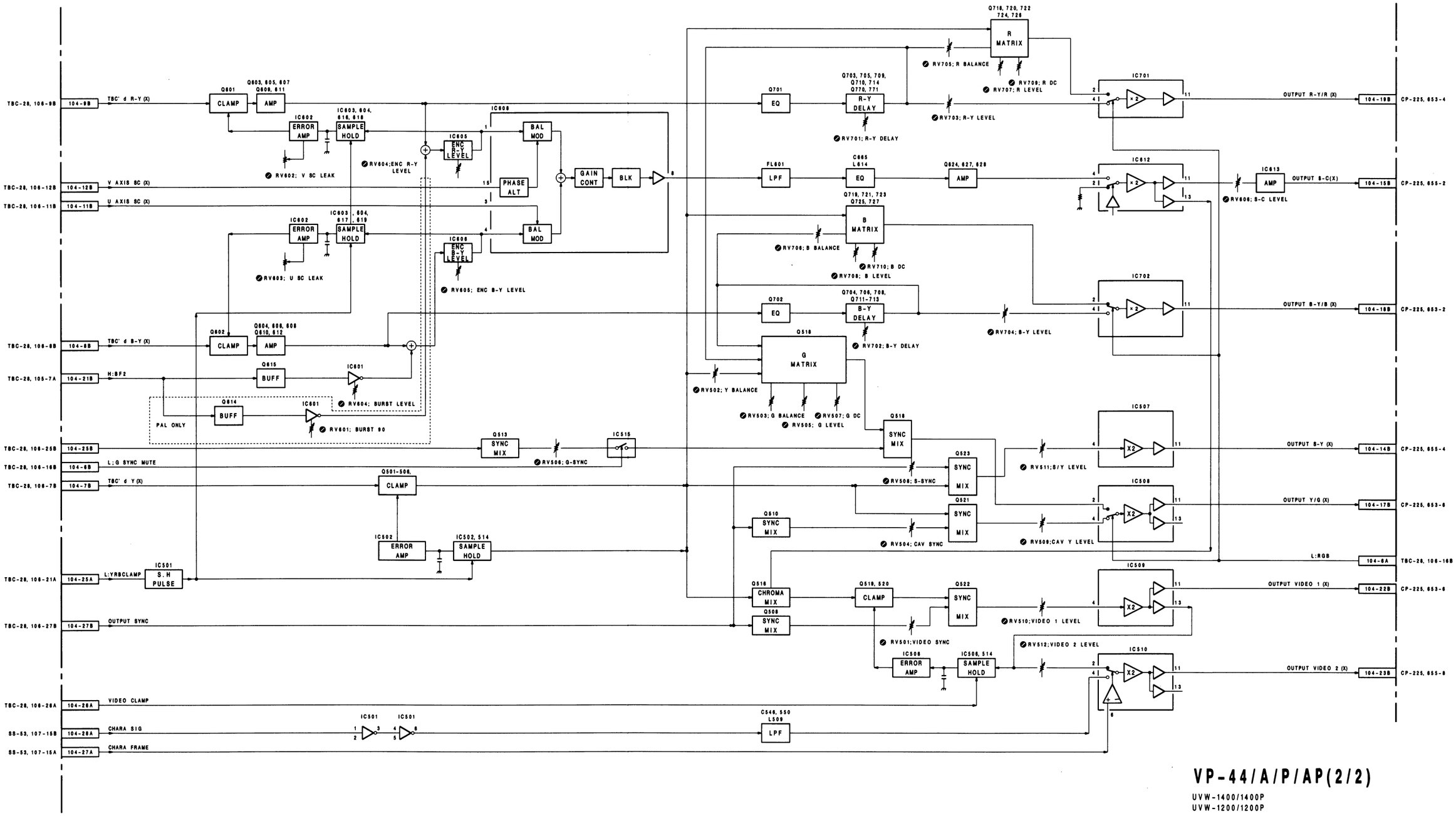

VP-44/A/P/AP(2/2)

UVW-1400/1400P
UVW-1200/1200P

TBC, CTDM (1)

For J,UC

① TP101 PB

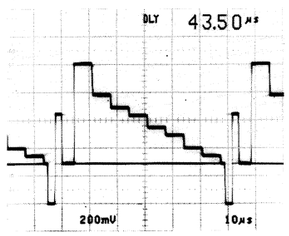

② TP201 PB

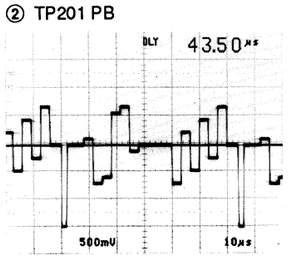

③ TP500 PB

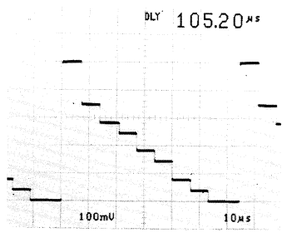

④ TP501 PB

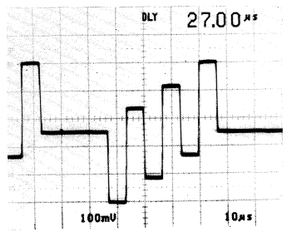

⑤ TP502 PB

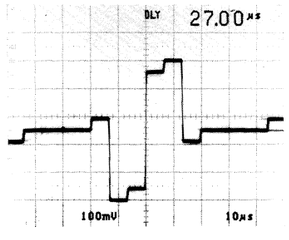

⑥ TP303 PB

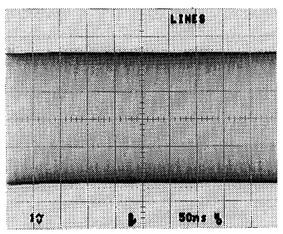

⑦ TP402 PB

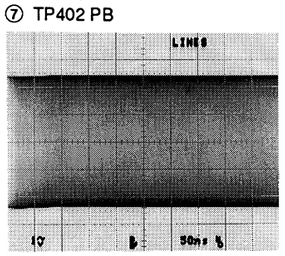

For EK

① TP101 PB

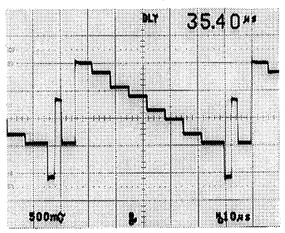

② TP201 PB

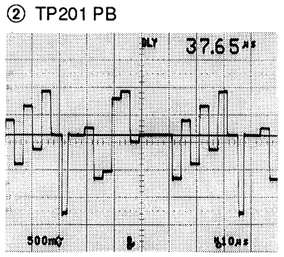

③ TP500 PB

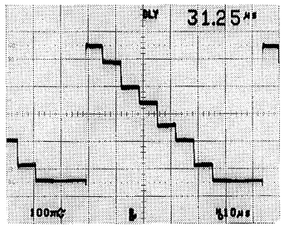

④ TP501 PB

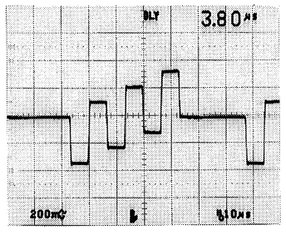

⑤ TP502 PB

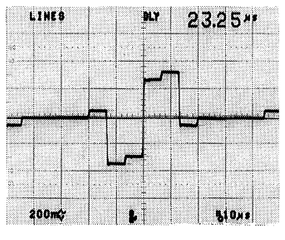

⑥ TP303 PB

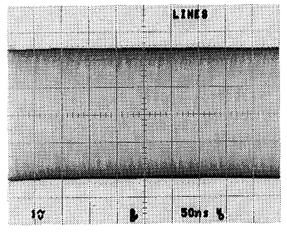

⑦ TP402 PB

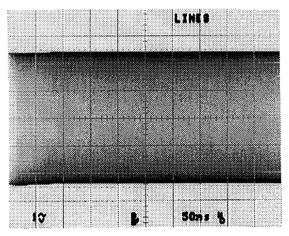

14-13

TIME BASE CORRECTOR,CTDM(EXPAND)

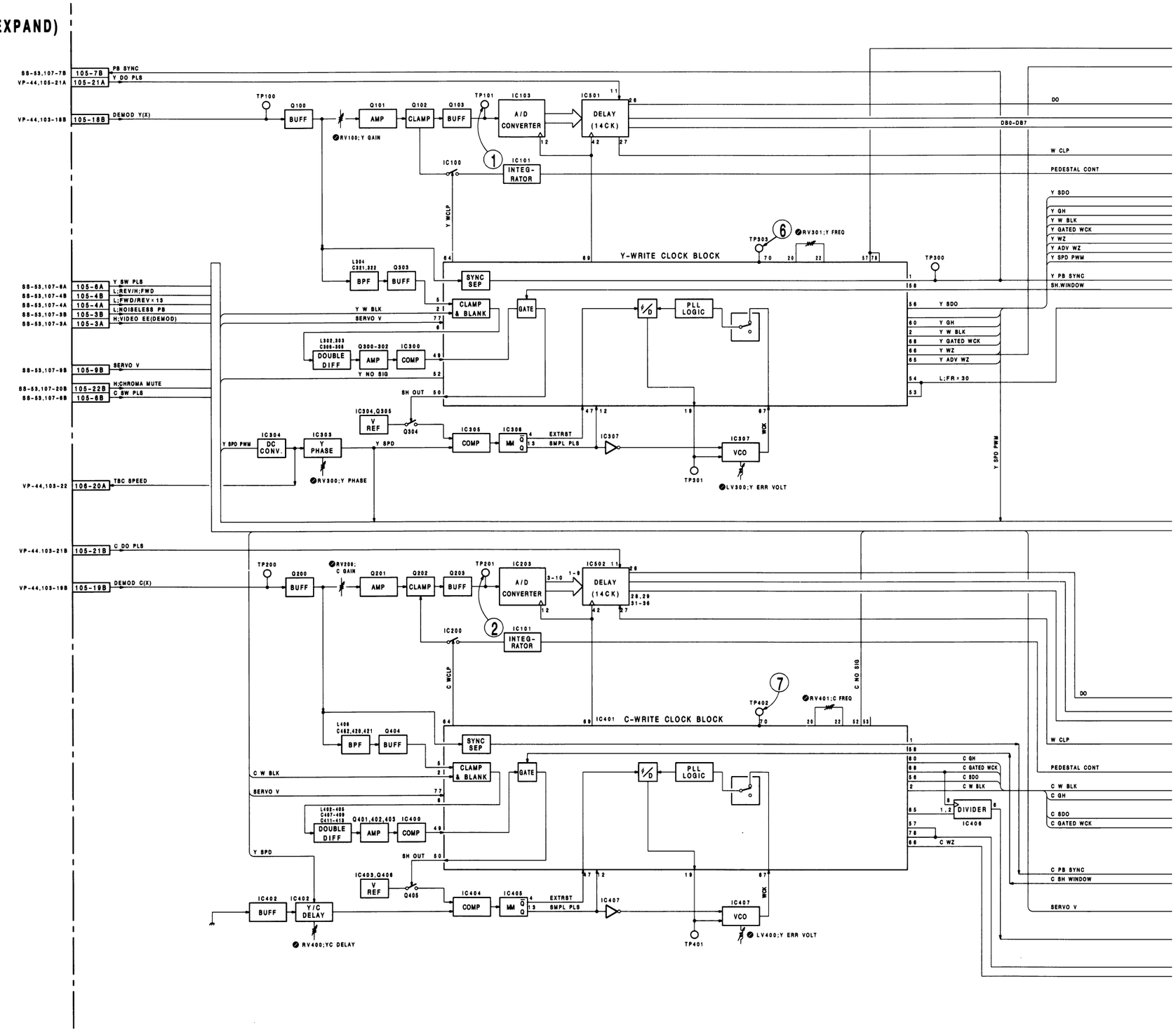

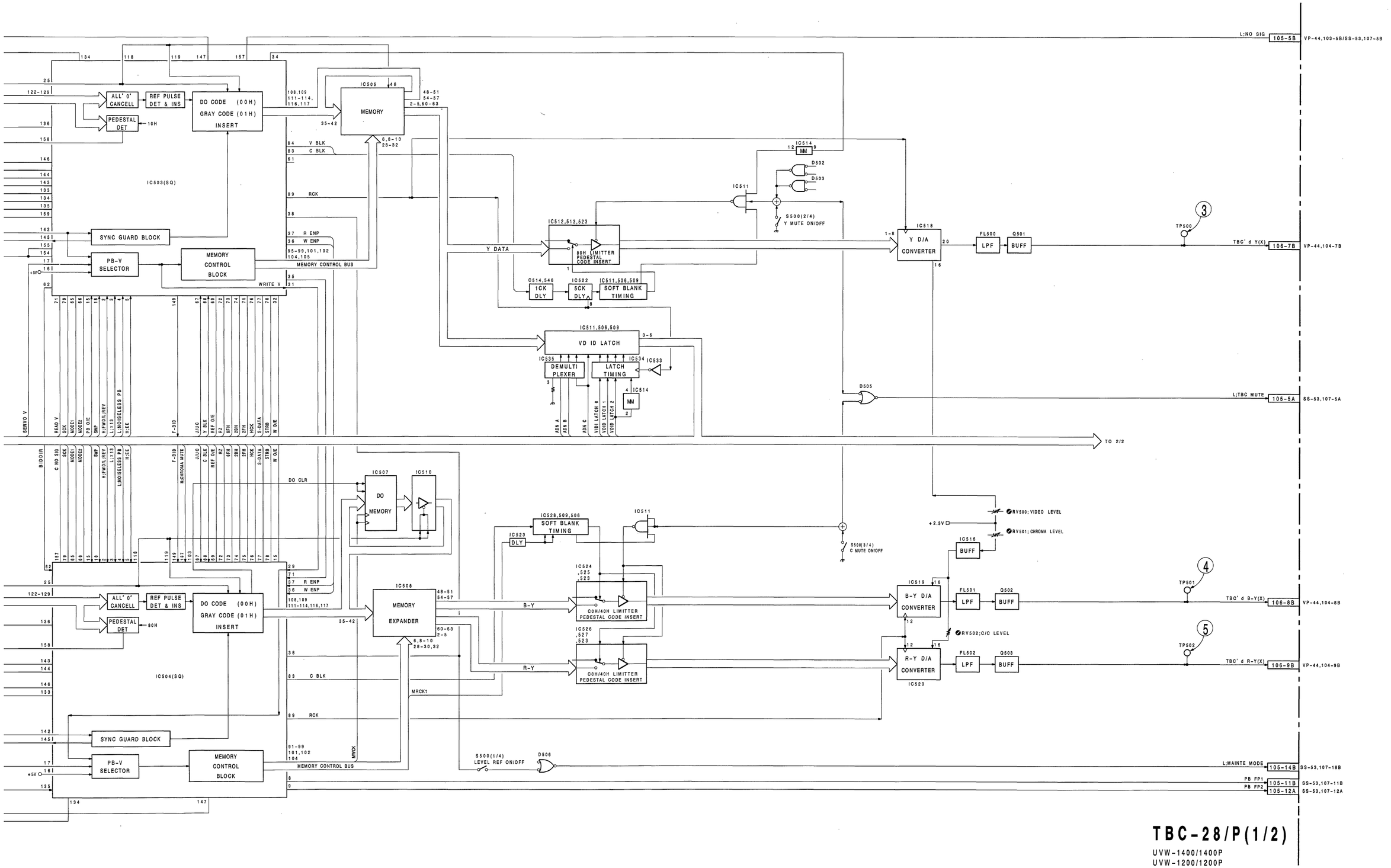

TBC-28/P(1/2)

UVW-1400/1400P
UVW-1200/1200P

TBC, CTDM (2)

TIME BASE CORRECTOR

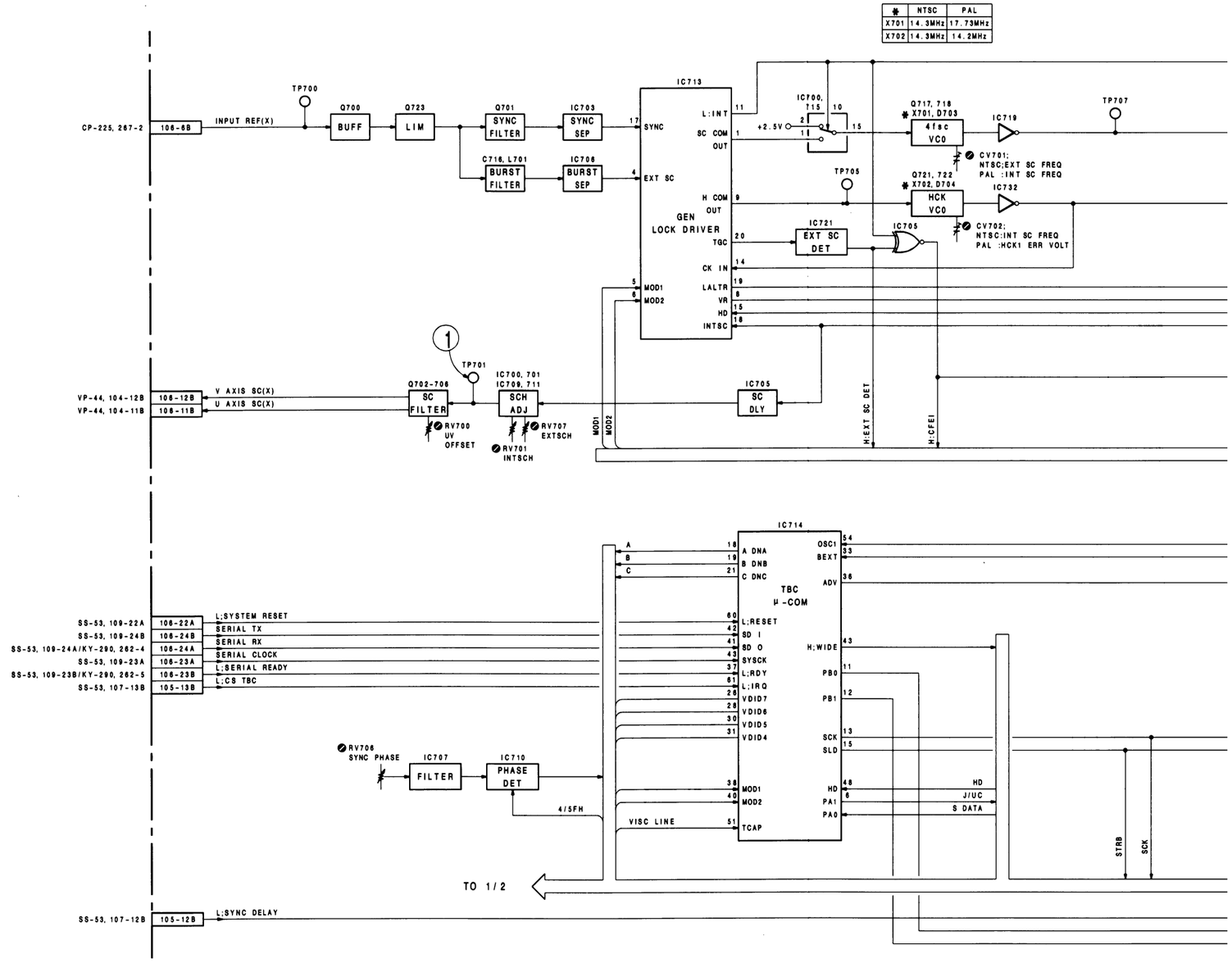

14-16

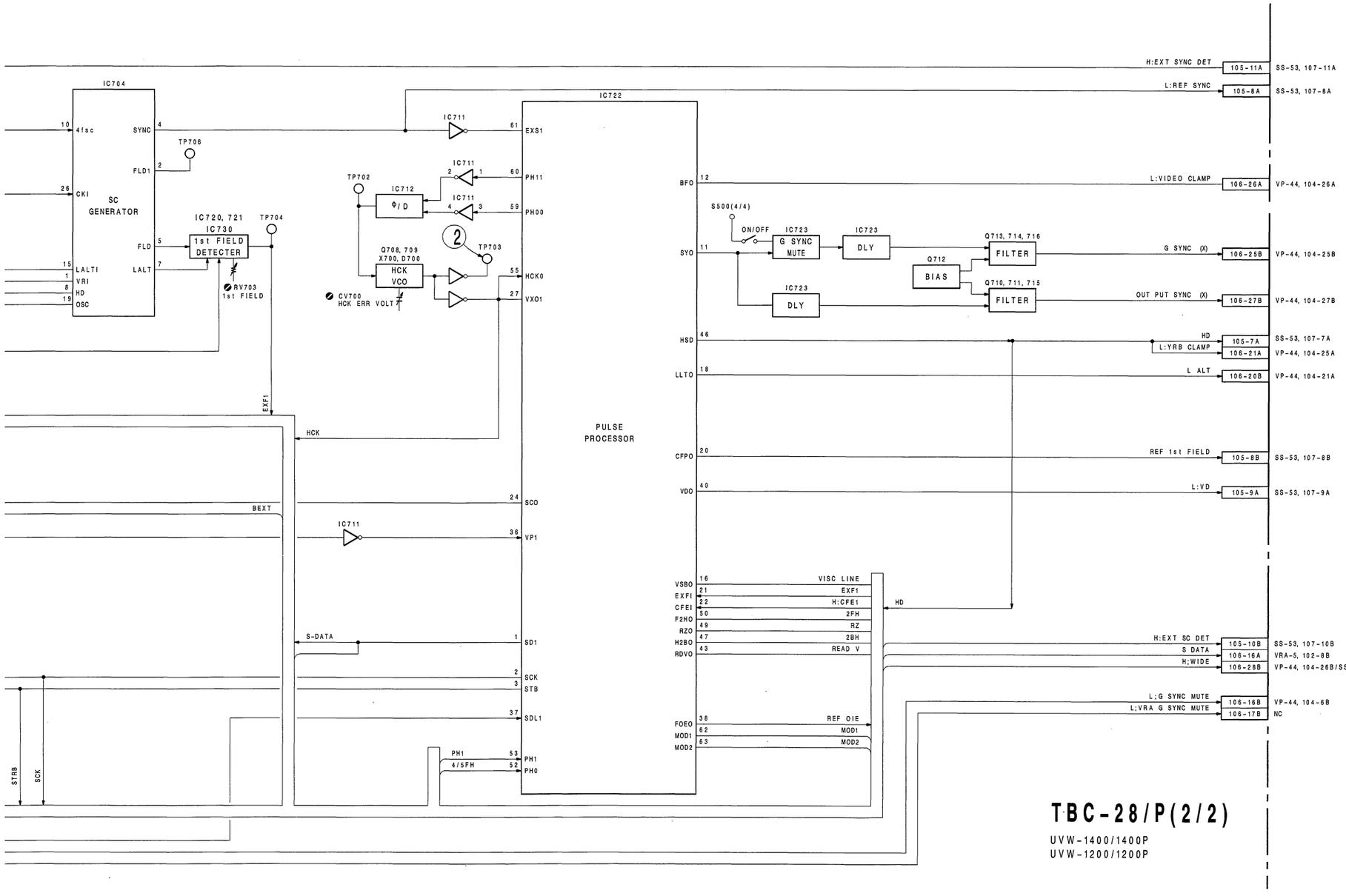

TBC-28/P(2/2)

UVW-1400/1400P
UVW-1200/1200P

TBC, CTDM (2)

For J,UC

① TP701 PB

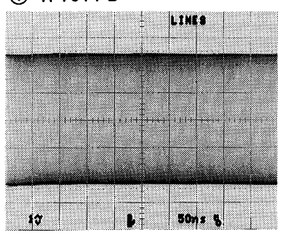

② TP703 PB

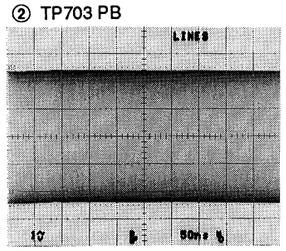

For EK

① TP701 PB

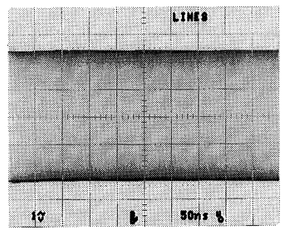

② TP703 PB

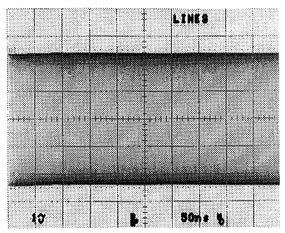

14-19

AUDIO PB,IN/OUT,LTC PB

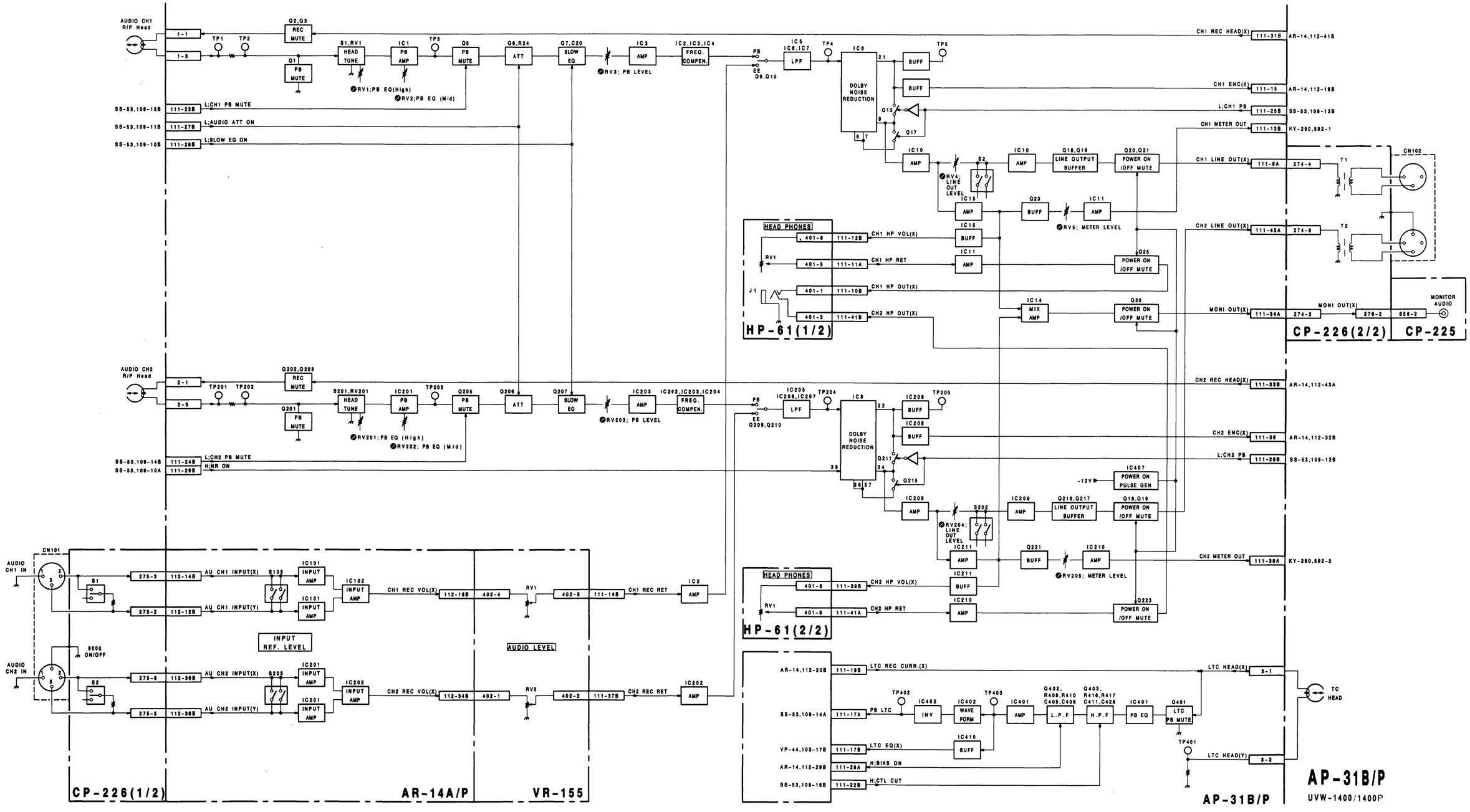

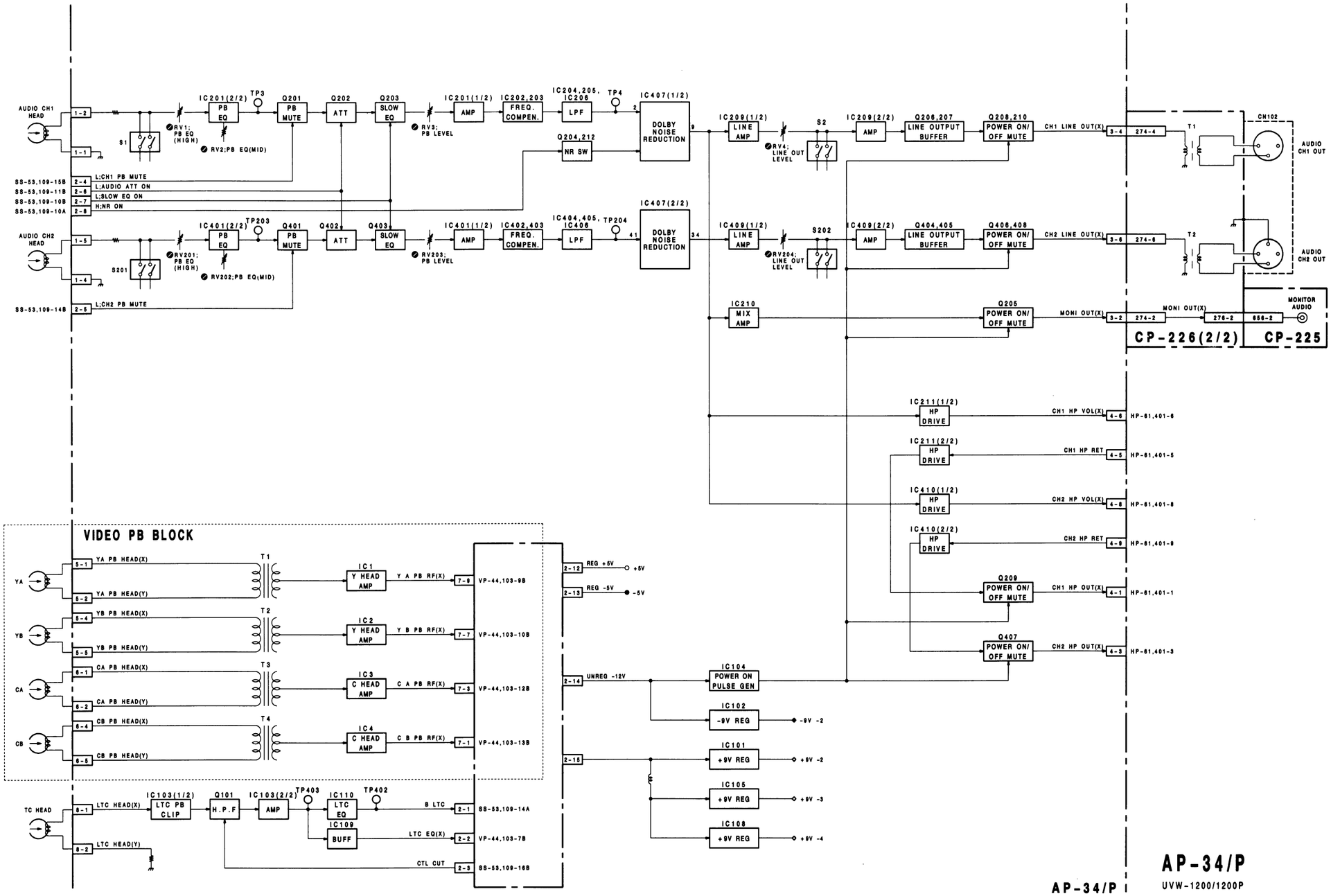
AUDIO CH1 HEAD
AUDIO CH2 HEAD
S1
S201
RV1; PB EQ (HIGH)
RV2;PB EQ(MID)
RV201; PB EQ (HIGH)
RV202;PB EQ(MID)
IC201(2/2) PB EQ
IC401(2/2) PB EQ
TP3
TP203
Q201 PB MUTE
Q401 PB MUTE
Q202 ATT
Q402 ATT
Q203 SLOW EQ
Q403 SLOW EQ
RV3; PB LEVEL
RV203; PB LEVEL
IC201(1/2) AMP
IC401(1/2) AMP
IC202,203 FREQ. COMPEN.
IC402,403 FREQ. COMPEN.
IC204,205, IC206 LPF
IC404,405, IC406 LPF
TP4
TP204
Q204,212 NR SW
IC407(1/2) DOLBY NOISE REDUCTION
IC407(2/2) DOLBY NOISE REDUCTION
SS-53,109-15B L;CH1 PB MUTE
SS-53,109-11B L;AUDIO ATT ON
SS-53,109-10B L;SLOW EQ ON
SS-53,109-10A H;NR ON
SS-53,109-14B L;CH2 PB MUTE
IC209(1/2) LINE AMP
IC409(1/2) LINE AMP
S2
S202
RV4; LINE OUT LEVEL
RV204; LINE OUT LEVEL
IC209(2/2) AMP
IC409(2/2) AMP
Q206,207 LINE OUTPUT BUFFER
Q404,405 LINE OUTPUT BUFFER
Q208,210 POWER ON/ OFF MUTE
Q406,408 POWER ON/ OFF MUTE
CH1 LINE OUT(X)
CH2 LINE OUT(X)
CN102
T1
T2
AUDIO CH1 OUT
AUDIO CH2 OUT
IC210 MIX AMP
Q205 POWER ON/ OFF MUTE
MONI OUT(X)
MONITOR AUDIO
CP-226(2/2)
CP-225
IC211(1/2) HP DRIVE
IC211(2/2) HP DRIVE
IC410(1/2) HP DRIVE
IC410(2/2) HP DRIVE
CH1 HP VOL(X)
CH1 HP RET
CH2 HP VOL(X)
CH2 HP RET
HP-61,401-6
HP-61,401-5
HP-61,401-8
HP-61,401-9
Q209 POWER ON/ OFF MUTE
Q407 POWER ON/ OFF MUTE
CH1 HP OUT(X)
CH2 HP OUT(X)
HP-61,401-1
HP-61,401-3
IC104 POWER ON PULSE GEN
IC102 -9V REG
IC101 +9V REG
IC105 +9V REG
IC108 +9V REG
UNREG -12V
REG +5V
REG -5V
VIDEO PB BLOCK
YA PB HEAD(X)
YA PB HEAD(Y)
YB PB HEAD(X)
YB PB HEAD(Y)
CA PB HEAD(X)
CA PB HEAD(Y)
CB PB HEAD(X)
CB PB HEAD(Y)
IC1 Y HEAD AMP
IC2 Y HEAD AMP
IC3 C HEAD AMP
IC4 C HEAD AMP
Y A PB RF(X)
Y B PB RF(X)
C A PB RF(X)
C B PB RF(X)
VP-44,103-9B
VP-44,103-10B
VP-44,103-12B
VP-44,103-13B
TC HEAD
LTC HEAD(X)
LTC HEAD(Y)
IC103(1/2) LTC PB CLIP
IC103(2/2) AMP
Q101 H.P.F
IC110 LTC EQ
IC109 BUFF
TP403
TP402
B LTC
LTC EQ(X)
CTL OUT
SS-53,109-14A
VP-44,103-7B
SS-53,109-16B
AP-34/P
AP-34/P
UVW-1200/1200P

AUDIO REC/BIAS OSC,LTC REC

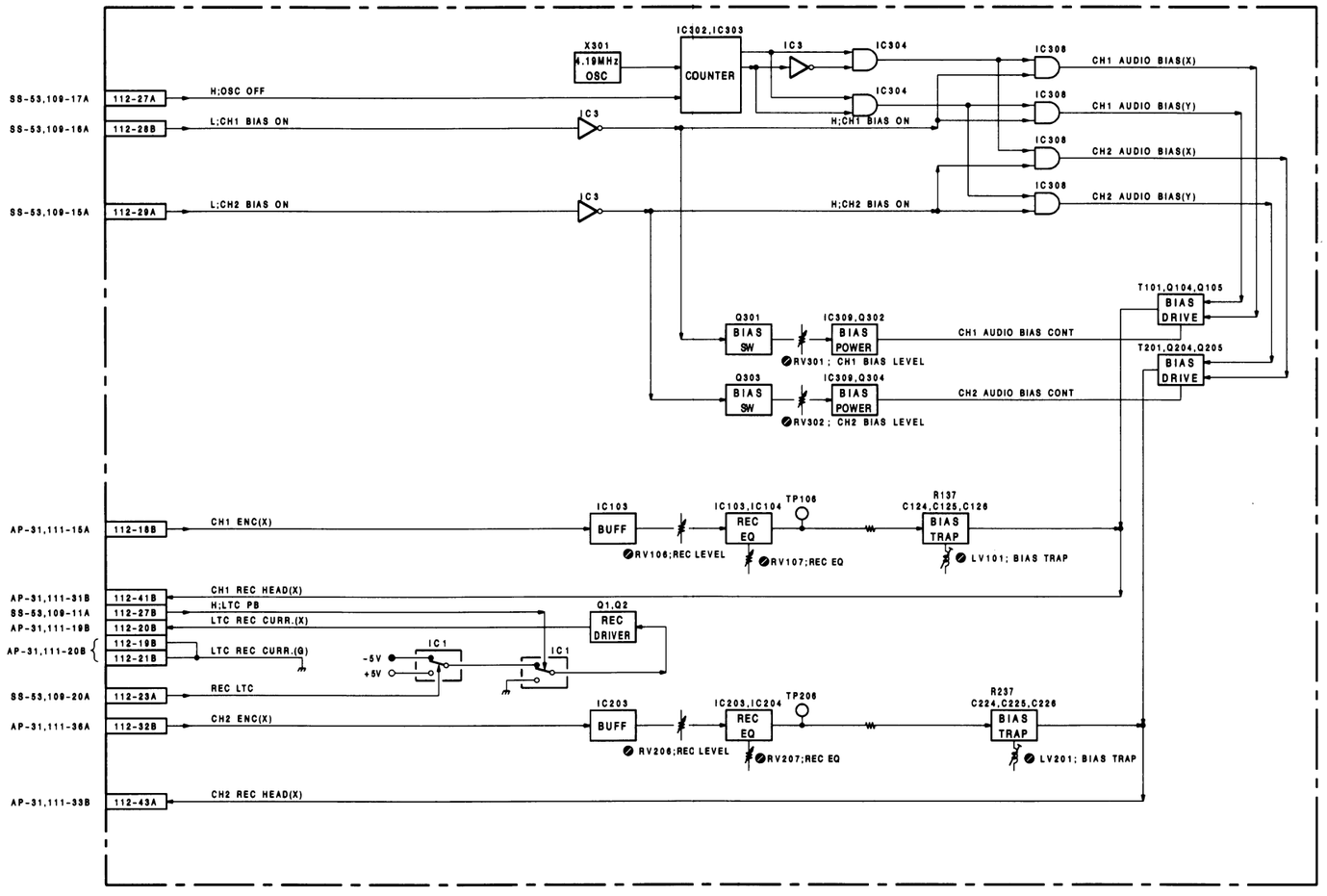

AR-14A/P

UVW-1400/1400P

For J,UC

① TP219 EE/REC/PB

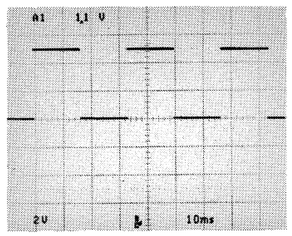

② TP225 PB

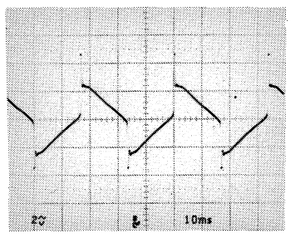

For EK

① TP219 EE/REC/PB

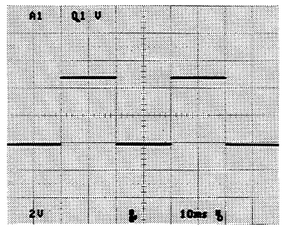

② TP225 PB

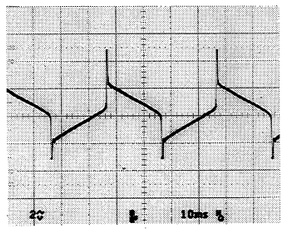

SYSTEM CONTROL BLOCK

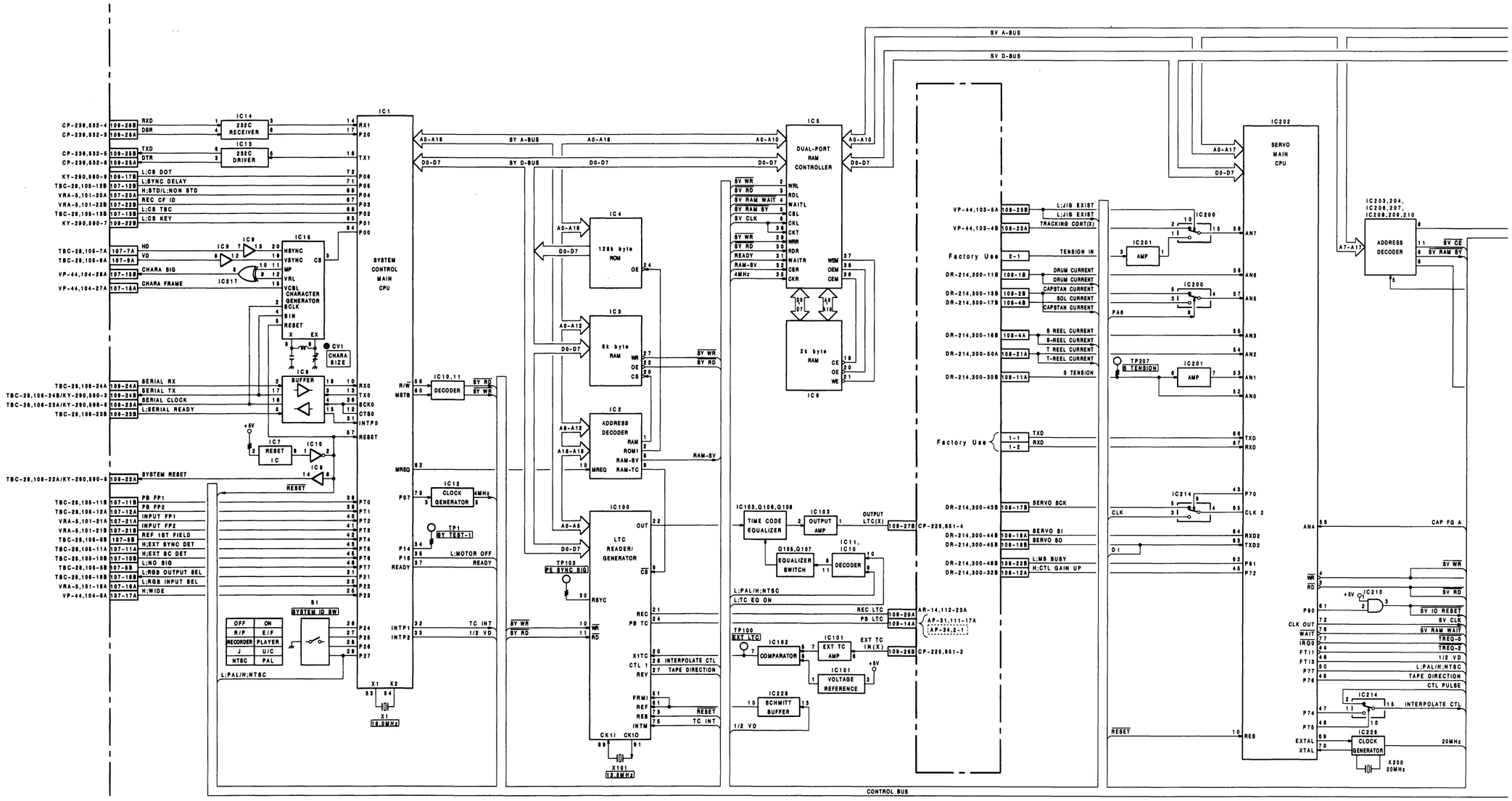

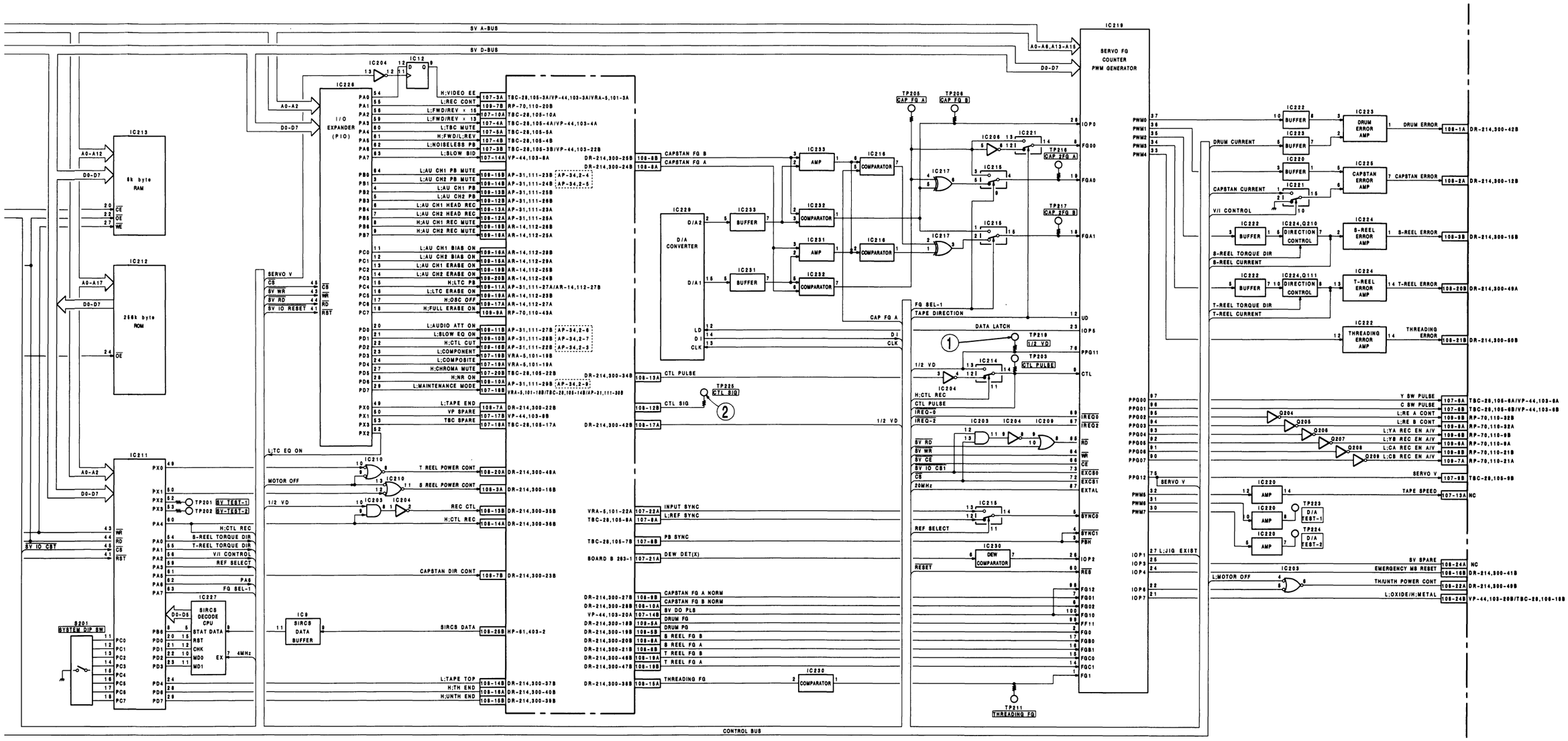

NOTE; (CONNECTOR' S DESTINATION)
For UVW-1200/1200P

SS-53A
UVW-1400/1400P
UVW-1200/1200P

SERVO(1)

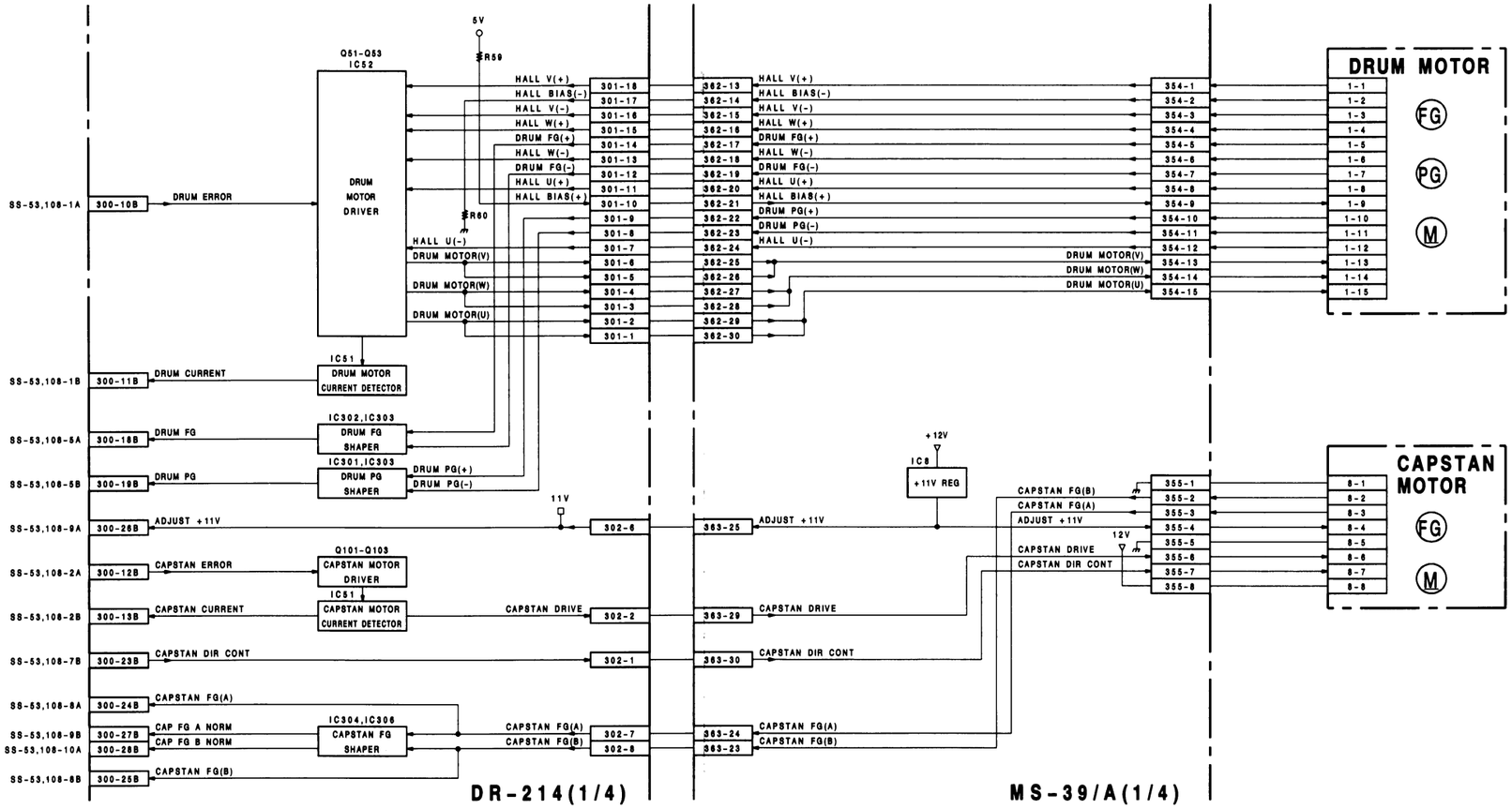

DR-214
MS-39/A(1/4)

UVW-1400/1400P
UVW-1200/1200P

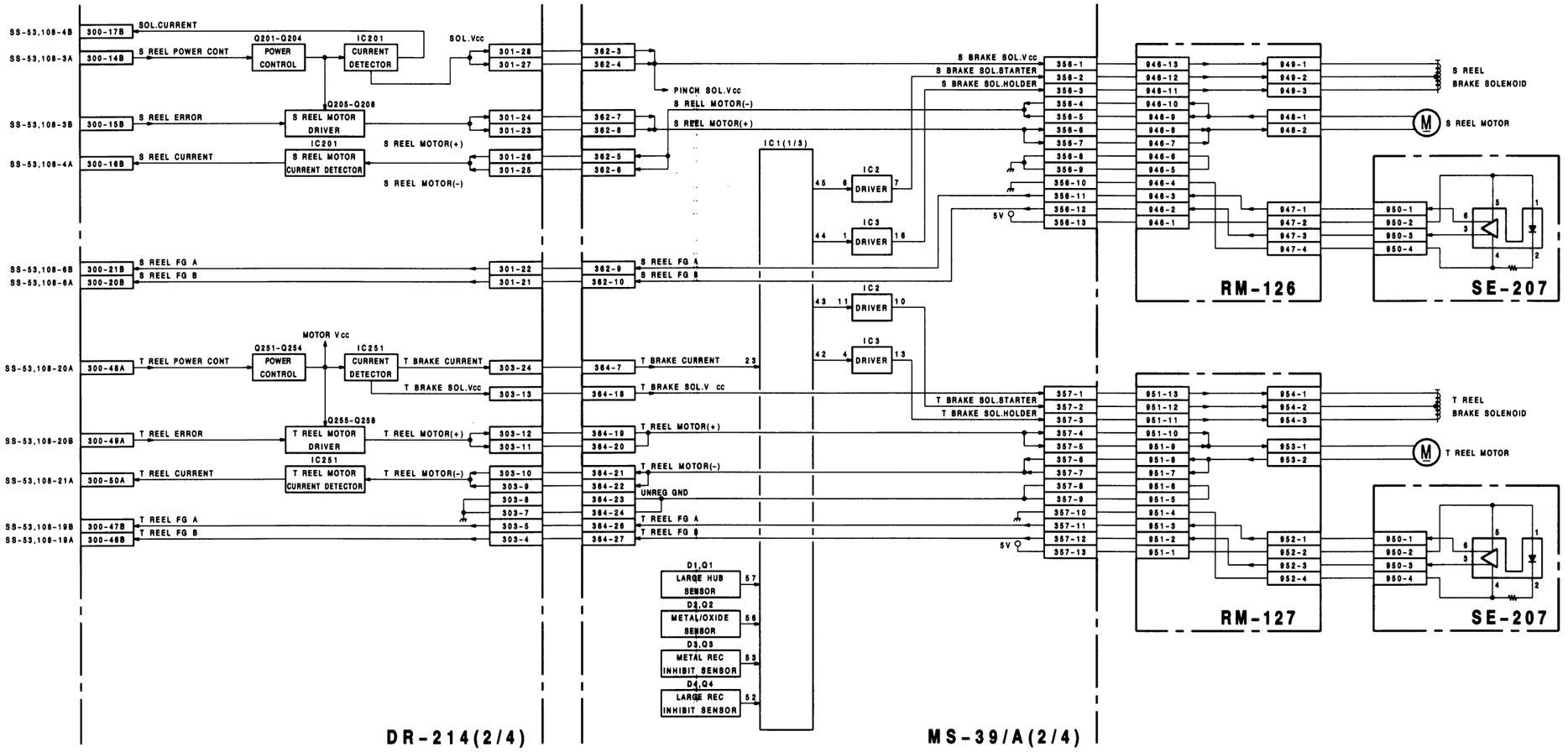

DR-214
MS-39/A(2/4)

UVW-1400/1400P
UVW-1200/1200P

SERVO(2)

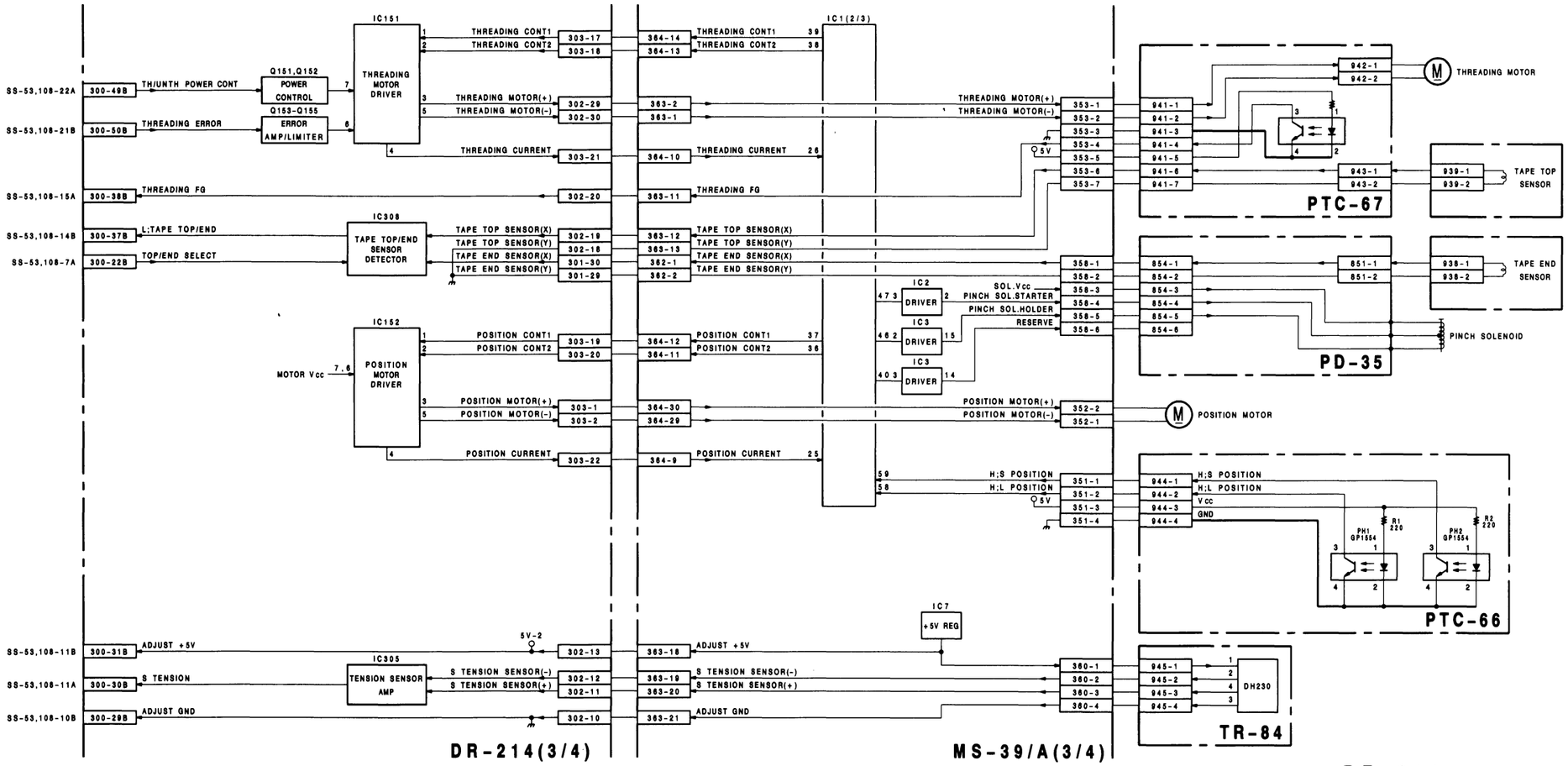

DR-214
MS-39/A(3/4)

UVW-1400/1400P
UVW-1200/1200P

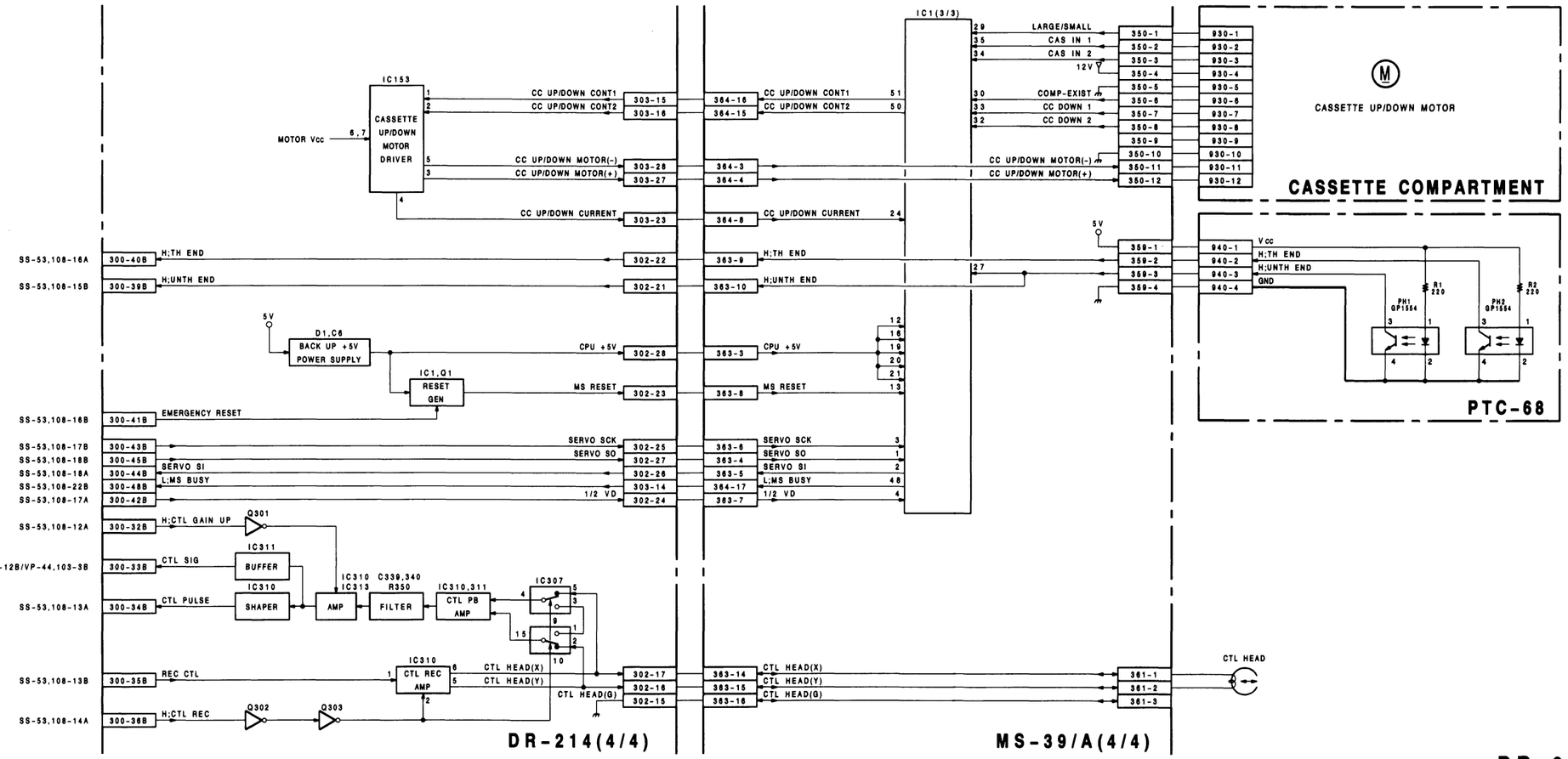

DR-214
MS-39/A(4/4)

UVW-1400/1400P
UVW-1200/1200P

POWER SUPPLY

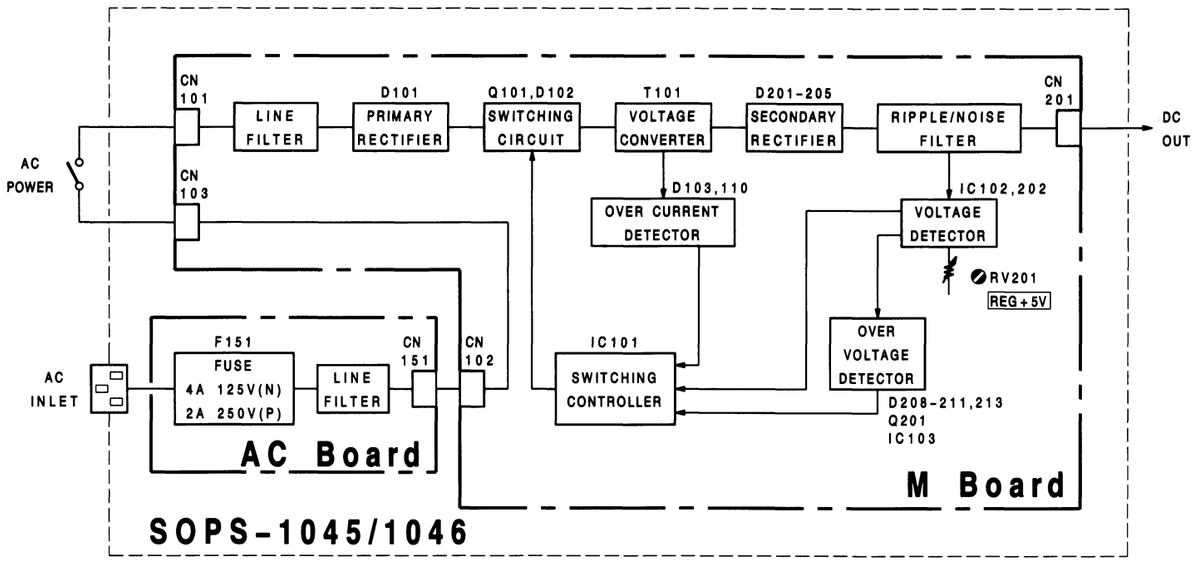

SOPS-1045(1400/1200)
SOPS-1046(1400P/1200P)

UVW-1400/1400P
UVW-1200/1200P

Section 15
Board Layouts

BOARD LAYOUT INDEX

	Board	Page
A	AP-31B/31BP	15-4
	AP-34/34P	15-6
	AR-14A/14AP	15-8
C	CL-29	15-40
	CP-225B	15-10
	CP-225C	15-11
	CP-226/226J	15-12
	CP-226A/226AJ	15-12
	CP-239	15-13
D	DR-214	15-14
H	HP-61	15-40
K	KY-290	15-16
	KY-290A	15-18
M	MB-520/520P	15-44
	MB-520A/520AP	15-46
	MB-471B	15-47
	MS-39/39A	15-20
P	PC-70	15-40
	PD-35	15-40
	PTC-66	15-41
	PTC-67	15-41
	PTC-68	15-41
R	RM-126	15-41
	RM-127	15-41
	RP-70B/70BP	15-42
S	SE-207	15-41
	SOPS-1045AC/1045M/1046M	15-43
	SS-53A	15-24
T	TBC-28/28P	15-28
	TR-84	15-41
V	VP-44/44A/44P/44AP	15-32
	VR-155	15-41
	VRA-5A/5AP	15-36

CIRCUIT FUNCTION

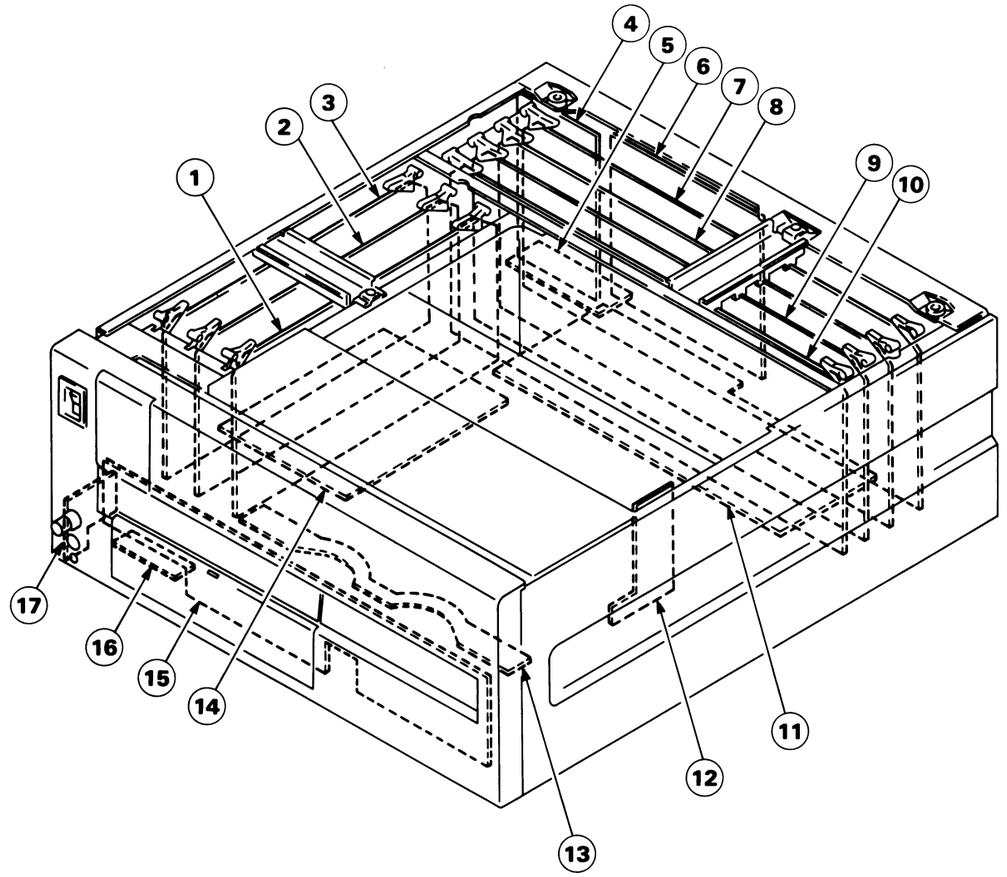

①	RP-70B/BP BOARD(UVW-1400/P)	; RF REC/PB AMP.,FULL ERASE OSC.
②	AP-31B/BP BOARD(UVW-1400/P)	; AUDIO/TC PB AMP.,METER DRIVER
	AP-34/P BOARD(UVW-1200/P)	; AUDIO/TC PB AMP.,RF HEAD AMP.
③	AR-14A/AP BOARD(UVW-1400/P)	; AUDIO/TC REC AMP.,AUDIO BIAS DRIVER
④	CP-226 BOARD(UVW-1400/P : FOR UC, EK)	; AUDIO INPUT/OUTPUT CONNECTOR, OUTPUT TRANSFORMER
	CP-226J BOARD(UVW-1400 : FOR J)	; AUDIO INPUT/OUTPUT CONNECTOR, OUTPUT TRANSFORMER
	CP-226A BOARD(UVW-1200/P : FOR UC, EK)	; AUDIO OUTPUT CONNECTOR,OUTPUT TRANSFORMER
	CP-226AJ BOARD(UVW-1200 : FOR J)	; AUDIO OUTPUT CONNECTOR,OUTPUT TRANSFORMER
⑤	CP-239 BOARD	; 25P REMOTE CONNECTOR
⑥	CP-225B BOARD(UVW-1400/P)	; VIDEO INPUT/OUTPUT CONNECTOR
	CP-225C BOARD(UVW-1200/P)	; VIDEO OUTPUT CONNECTOR
⑦	VRA-5A/AP BOARD(UVW-1400/P)	; Y/C REC PROCESS(DECODE,MOD),CTDM(COMPRESS)

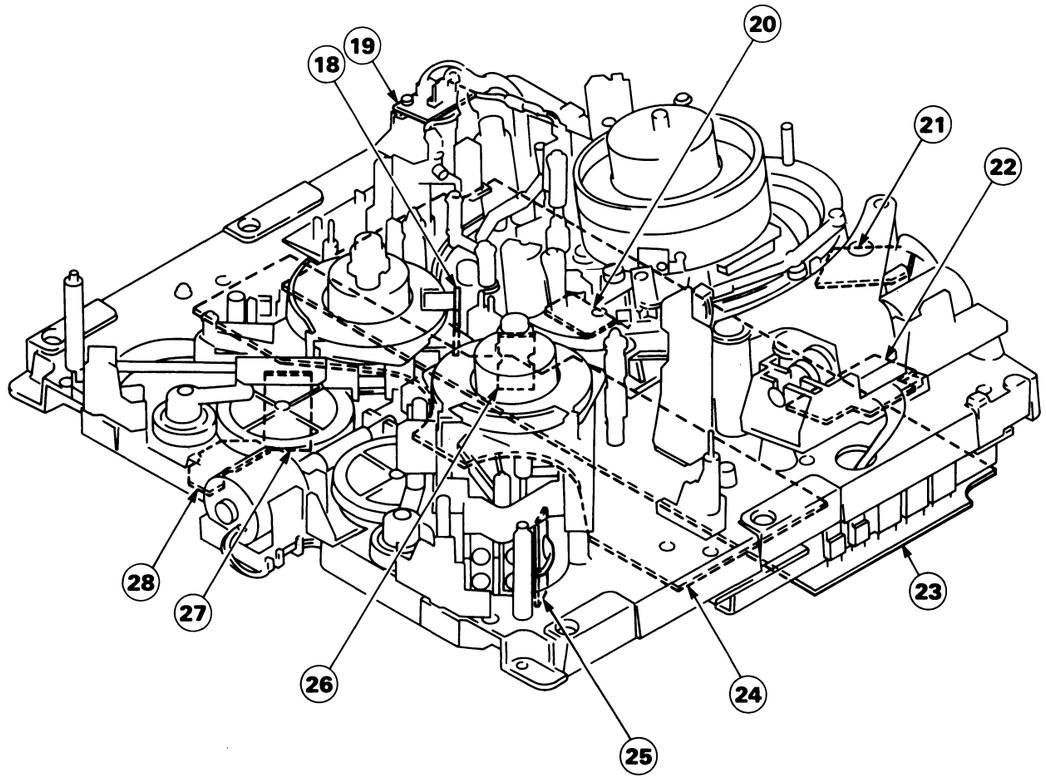

⑧ VP-44/P BOARD(UVW-1400/P) ; Y/C PB PROCESS(PB RF EQ,DEMOD.,Y-RF ENVELOPE DET),VIDEO OUTPUT DRIVER, ENCODE, SYNC/CHARA MIX

VP-44A/AP BOARD(UVW-1200/P) ; Y/C PB PROCESS(PB RF EQ,DEMOD.,Y-RF ENVELOPE DET),VIDEO OUTPUT DRIVER, ENCODE, SYNC/CHARA MIX

⑨ TBC-28/P BOARD ; TIME BASE CORRECTOR,CTDM(EXPAND)

⑩ SS-53A BOARD ; SYSTEM CONTROL,SERVO SYSTEM MAIN,TIME CODE GENERATOR/READER, CHARACTER GENERATOR

⑪ MB-520/P BOARD(UVW-1400/P) ; MOTHER BOARD

MB-520A/AP BOARD(UVW-1200/P) ; MOTHER BOARD

⑫ CL-29 BOARD (CASSETTE COMPARTMENT) ; CASSETTE LOADING BEGIN/NEAR-END SENSOR

⑬ PC-70 BOARD (CASSETTE COMPARTMENT) ; CASSETTE IN/LARGE CASSETTE SENSOR

⑭ MB-471B BOARD(UVW-1400/P) ; MOTHER BOARD

⑮ KY-290 BOARD(UVW-1400/P) ; FUNCTION KEY, FL DISPLAY

KY-290A BOARD(UVW-1200/P) ; FUNCTION KEY, FL DISPLAY

⑯ VR-155 BOARD (UVW-1400/P) ; AUDIO REC LEVEL

⑰ HP-61 BOARD ; HEADPHONES JACK/VOLUME CONTROL

⑱ SE-207 BOARD(S SIDE) ; REEL FG

⑲ PD-35 BOARD ; PINCH SOLENOID

⑳ TR-84 BOARD ; S-TENSION SENSOR

㉑ PTC-68 BOARD ; THREAD END/UNTHREAD END SENSOR

㉒ PTC-67 BOARD ; THREADING FG/MOTOR

㉓ DR-214 BOARD ; MOTOR DRIVER,TENSION SENS. AMP., DRUM FG/PG AMP., CAPSTAN FG AMP., CTL, REC/PB AMP.

㉔ MS-39 BOARD(UVW-1400/P) ; CASSETTE INFORMATION,SOLENOID DRIVER,MECHA. CONTROL MPU, DATA STORAGE

MS-39A BOARD(UVW-1200/P) ; CASSETTE INFORMATION,SOLENOID DRIVER,MECHA. CONTROL MPU, DATA STORAGE

㉕ RM-127 BOARD ; T-REEL MOTOR

㉖ SE-207 BOARD(T SIDE) ; REEL FG

㉗ RM-126 BOARD ; S-REEL MOTOR

㉘ PTC-66 BOARD ; REEL POSITION SENSOR

AP-31B/31BP ; AUDIO/TC PB AMP., METER DRIVER

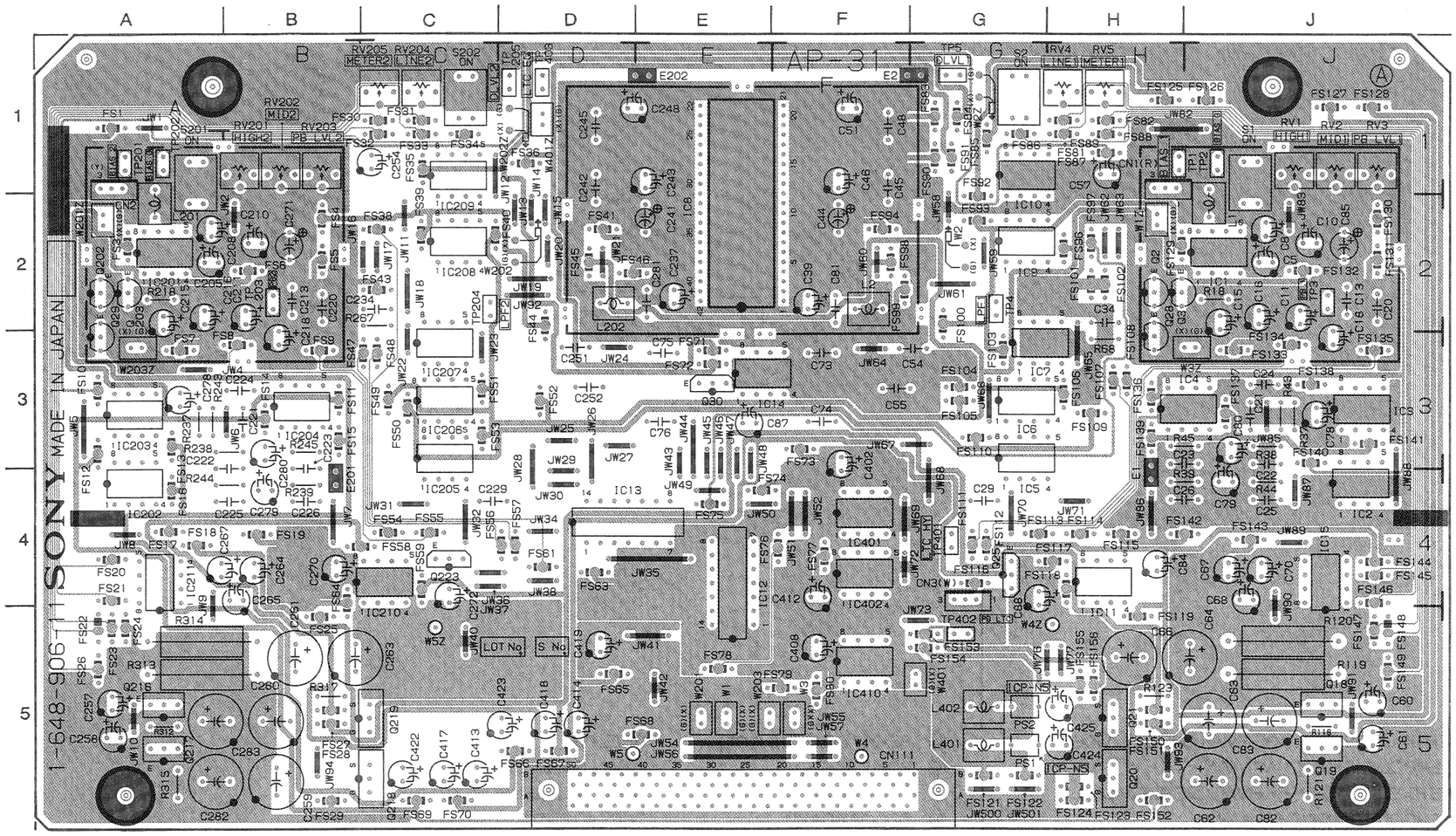

AP-31B 1-648-906-11 A SIDE

UVW-1400 (J) ; Serial No. 10001 through 10420
UVW-1400 (UC) ; Serial No. 10001 through 11050
UVW-1400P(EK) ; Serial No. 10001 through 11490

AP-31B/31BP(1-648-906-11)

CN1	H-1	FS40	C-2
CN2	A-1	FS41	D-2
CN3	G-4	FS43	C-2
CN111	E-5	FS44	D-2
		FS45	D-2
✱D1	J-2	FS46	D-2
✱D2	H-3	FS47	C-3
✱D3	H-4	FS48	C-3
✱D5	G-3	FS49	C-3
✱D6	G-3	FS50	C-3
✱D7	J-5	FS51	C-3
✱D8	H-5	FS52	D-3
✱D10	G-5	FS53	C-3
✱D11	E-3	FS54	C-4
✱D12	F-3	FS55	C-4
✱D13	F-3	FS56	D-4
✱D15	E-3	FS57	D-4
✱D16	E-3	FS58	C-4
✱D17	J-2	FS59	C-4
✱D18	H-2	FS61	D-4
✱D201	A-2	FS63	D-4
✱D202	C-3	FS64	B-4
✱D203	C-4	FS65	D-5
✱D204	D-3	FS66	D-5
✱D205	D-3	FS67	D-5
✱D206	A-5	FS68	E-5
✱D207	B-5	FS69	C-5
✱D209	C-4	FS70	C-5
✱D210	B-2	FS71	E-3
✱D211	A-3	FS72	E-3
✱D401	F-3	FS73	F-3
✱D403	F-5	FS74	E-4
✱D500	D-5	FS75	E-4
		FS76	F-4
E1	H-4	FS77	F-4
E2	G-1	FS78	E-5
E201	B-4	FS79	F-5
E202	E-1	FS80	F-5
		FS81	H-1
FS1	A-1	FS82	H-1
FS3	A-2	FS83	G-1
FS4	B-2	FS84	G-1
FS5	B-2	FS85	G-1
FS6	B-2	FS86	G-1
FS7	A-3	FS87	H-1
FS8	B-3	FS88	H-1
FS9	B-3	FS89	H-1
FS10	A-3	FS90	G-1
FS11	B-3	FS91	G-1
FS12	A-3	FS92	G-2
FS13	A-3	FS93	G-2
FS14	B-3	FS94	F-2
FS15	B-3	FS96	H-2
FS16	A-4	FS97	H-2
FS17	A-4	FS98	F-2
FS18	A-4	FS99	F-2
FS19	B-4	FS100	G-2
FS20	A-4	FS101	H-2
FS21	A-4	FS102	H-2
FS22	A-5	FS103	G-3
FS23	A-5	FS104	G-3
FS24	A-5	FS105	G-3
FS25	B-5	FS106	H-3
FS26	A-5	FS107	H-3
FS27	B-5	FS108	H-3
FS28	B-5	FS109	H-3
FS29	B-5	FS110	G-3
FS30	C-1	FS111	G-4
FS31	C-1	FS112	G-4
FS32	C-1	FS113	G-4
FS33	C-1	FS114	H-4
FS34	C-1	FS115	H-4
FS35	C-1	FS116	G-4
FS36	D-1	FS117	H-4
FS38	C-2	FS118	H-4
FS39	C-2	FS119	H-5

✱ : B SIDE

FS121	G-5	Q2	H-2	✱TH1	J-2
FS122	G-5	Q3	H-2	✱TH2	B-2
FS123	H-5	✱Q4	J-2		
FS124	H-5	✱Q5	J-2	TP1	H-1
FS125	H-1	✱Q6	J-2	TP2	J-1
FS126	J-1	✱Q7	J-2	TP3	J-2
FS127	J-1	✱Q8	H-3	TP4	G-2
FS128	J-1	✱Q9	H-4	TP5	G-1
FS129	H-2	✱Q10	H-4	TP201	A-1
FS130	J-2	✱Q11	C-2	TP202	A-1
FS131	J-2	✱Q12	E-2	TP203	B-2
FS132	J-2	✱Q13	E-1	TP204	C-2
FS133	J-3	✱Q14	G-3	TP205	D-1
FS134	J-3	✱Q15	F-3	TP401	G-4
FS135	J-3	✱Q16	F-3	TP402	G-5
FS136	H-3	✱Q17	F-2	TP403	D-1
FS137	J-3	Q18	J-5		
FS138	J-3	Q19	J-5		
FS139	H-3	Q20	H-5		
FS140	J-3	Q21	H-5		
FS141	J-3	✱Q22	J-4		
FS142	J-4	✱Q23	H-4		
FS143	J-4	Q25	G-4		
FS144	J-4	✱Q26	E-3		
FS145	J-4	✱Q27	D-4		
FS146	J-4	Q28	H-3		
FS147	J-5	Q29	A-3		
FS148	J-5	Q30	E-3		
FS149	J-5	✱Q34	J-2		
FS150	H-5	✱Q35	J-2		
FS151	H-5	✱Q36	J-2		
FS152	H-5	✱Q201	A-1		
FS153	G-5	Q202	A-2		
FS154	G-5	Q203	A-2		
FS155	H-5	✱Q204	B-2		
FS156	H-5	✱Q205	A-2		
		✱Q206	A-2		
IC1	J-2	✱Q207	B-2		
IC2	J-4	✱Q208	C-3		
IC3	J-3	✱Q209	B-4		
IC4	H-3	✱Q210	B-4		
IC5	G-4	✱Q211	E-1		
IC6	G-3	✱Q212	D-3		
IC7	G-3	✱Q213	D-3		
IC8	F-2	✱Q214	D-3		
IC9	G-2	✱Q215	E-2		
IC10	G-2	Q216	A-5		
IC11	H-4	Q217	A-5		
IC12	E-5	Q218	C-5		
IC13	D-4	Q219	C-5		
IC14	E-3	✱Q220	B-4		
IC15	J-4	✱Q221	B-4		
IC201	A-2	Q223	C-4		
IC202	A-4	✱Q224	B-2		
IC203	A-3	✱Q225	B-2		
IC204	B-3	✱Q226	B-2		
IC205	C-4	✱Q401	G-4		
IC206	C-3	✱Q402	F-5		
IC207	C-3	✱Q403	F-3		
IC208	C-2				
IC209	C-2	RV1	J-1		
IC210	C-4	RV2	J-1		
IC211	A-4	RV3	J-1		
IC401	F-4	RV4	H-1		
IC402	F-4	RV5	H-1		
✱IC405	C-5	RV201	B-1		
✱IC406	D-5	RV202	B-1		
✱IC407	D-5	RV203	B-1		
✱IC408	C-5	RV204	C-1		
✱IC409	D-5	RV205	C-1		
IC410	F-5				
		S1	J-1		
PS1	G-5	S2	G-1		
PS2	G-5	S201	A-1		
		S202	C-1		
✱Q1	H-1				

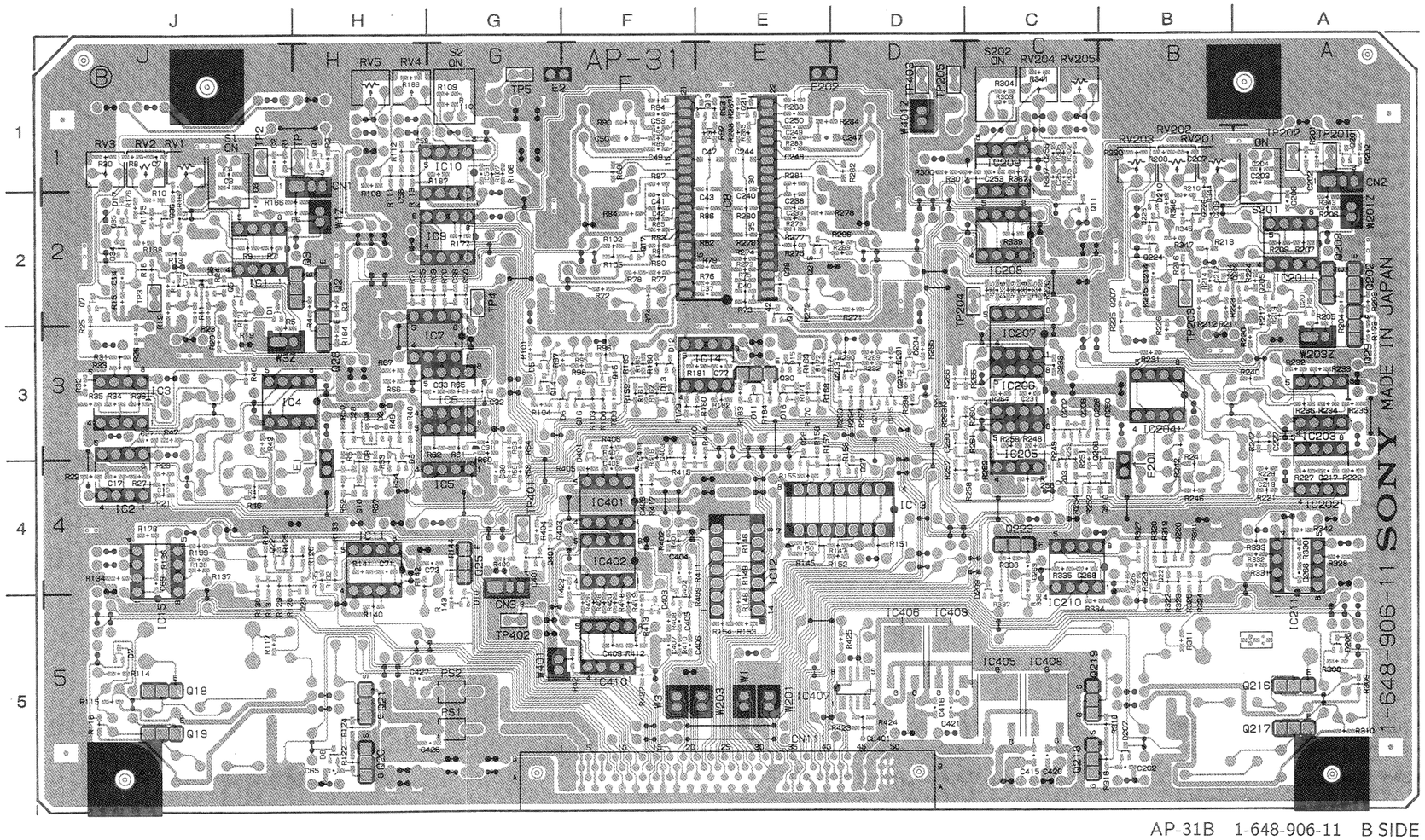

AP-31B 1-648-906-11 B SIDE

AP-31B/31BP ; AUDIO/TC PB AMP., METER DRIVER

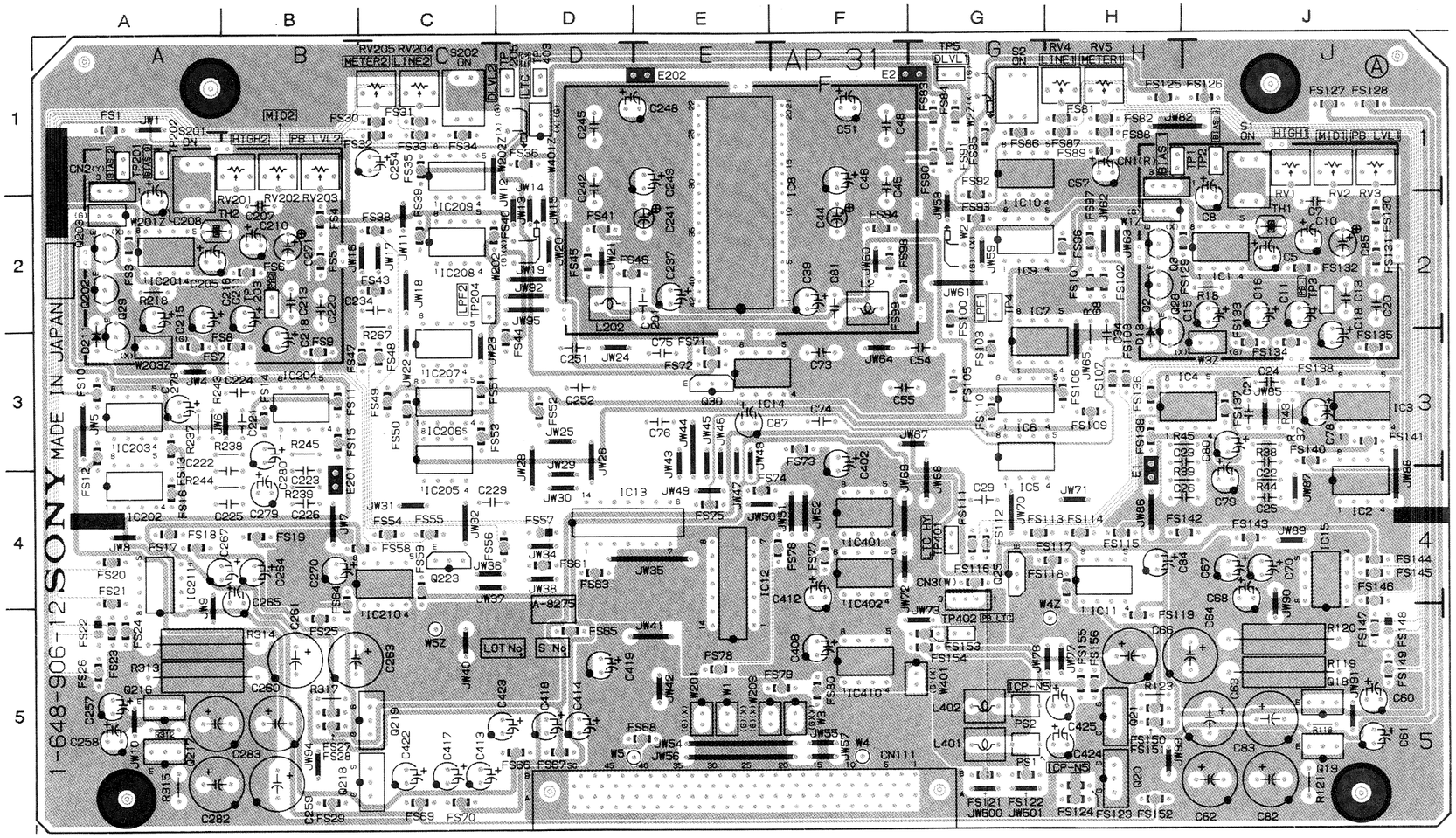

FS121		G-5	✱Q1		H-1	S202	C-1
FS122		G-5	Q2		H-2		
FS123		H-5	Q3		H-2	TH1	J-2
FS124		H-5	✱Q4		J-2	TH2	A-2
FS125		H-1	✱Q5		J-2		
FS126		J-1	✱Q6		J-2	TP1	H-1
FS127		J-1	✱Q7		J-2	TP2	J-1
FS128		J-1	✱Q8		H-3	TP3	J-2
FS129	P	H-2	✱Q9		H-4	TP4	G-2
FS129	N	J-2	✱Q10		H-4	TP5	G-1
FS130		J-2	✱Q11		C-2	TP201	A-1
FS131		J-2	✱Q12		E-2	TP202	A-1
FS132		J-2	✱Q13		E-1	TP203	B-2
FS133		J-3	✱Q14		G-3	TP204	C-2
FS134		J-3	✱Q15		F-3	TP205	D-1
FS135		J-3	✱Q16		F-3	TP401	G-4
FS136		H-3	✱Q17		F-2	TP402	G-5
FS137		J-3	Q18		J-5	TP403	D-1
FS138		J-3	Q19		J-5		
FS139		H-3	Q20		H-5		
FS140		J-3	Q21		H-5		
FS141		J-3	✱Q22		J-4		
FS142		J-4	✱Q23		H-4		
FS143		J-4	Q25		G-4		
FS144		J-4	✱Q26	P	E-3		
FS145		J-4	✱Q26	N	E-4		
FS146		J-4	✱Q27		D-4		
FS147		J-5	Q28		H-3		
FS148		J-5	Q29		A-3		
FS149		J-5	Q30		E-3		
FS150		H-5	✱Q34		J-2		
FS151		H-5	✱Q35		J-2		
FS152		H-5	✱Q36		J-2		
FS153		G-5	✱Q201		A-1		
FS154		G-5	Q202		A-2		
FS155		H-5	Q203		A-2		
FS156		H-5	✱Q204		B-2		
			✱Q205		A-2		
IC1		J-2	✱Q206		A-2		
IC2		J-4	✱Q207		B-2		
IC3		J-3	✱Q208		C-3		
IC4		H-3	✱Q209		B-4		
IC5		G-4	✱Q210		B-4		
IC6		G-3	✱Q211		E-1		
IC7		G-3	✱Q212		D-3		
IC8		F-2	✱Q213		D-3		
IC9		G-2	✱Q214		D-3		
IC10		G-2	✱Q215		E-2		
IC11		H-4	Q216		A-5		
IC12		E-5	Q217		A-5		
IC13		D-4	Q218		C-5		
IC14		E-3	Q219		C-5		
IC15		J-4	✱Q220		B-4		
IC201		A-2	✱Q221		B-4		
IC202		A-4	Q223		C-4		
IC203		A-3	✱Q224		B-2		
IC204		B-3	✱Q225		B-2		
IC205		C-4	✱Q226		B-2		
IC206		C-3	✱Q401		G-4		
IC207		C-3	✱Q402		F-5		
IC208		C-2	✱Q403		F-3		
IC209		C-2					
IC210		C-4	RV1		J-1		
IC211		A-4	RV2		J-1		
IC401		F-4	RV3		J-1		
IC402		F-4	RV4		H-1		
✱IC405		C-5	RV5		H-1		
✱IC406		D-5	RV201		B-1		
✱IC407		D-5	RV202		B-1		
✱IC408		C-5	RV203		B-1		
✱IC409		D-5	RV204		C-1		
IC410		F-5	RV205		C-1		
PS1		G-5	S1		J-1		
PS2		G-5	S2		G-1		
			S201		A-1		

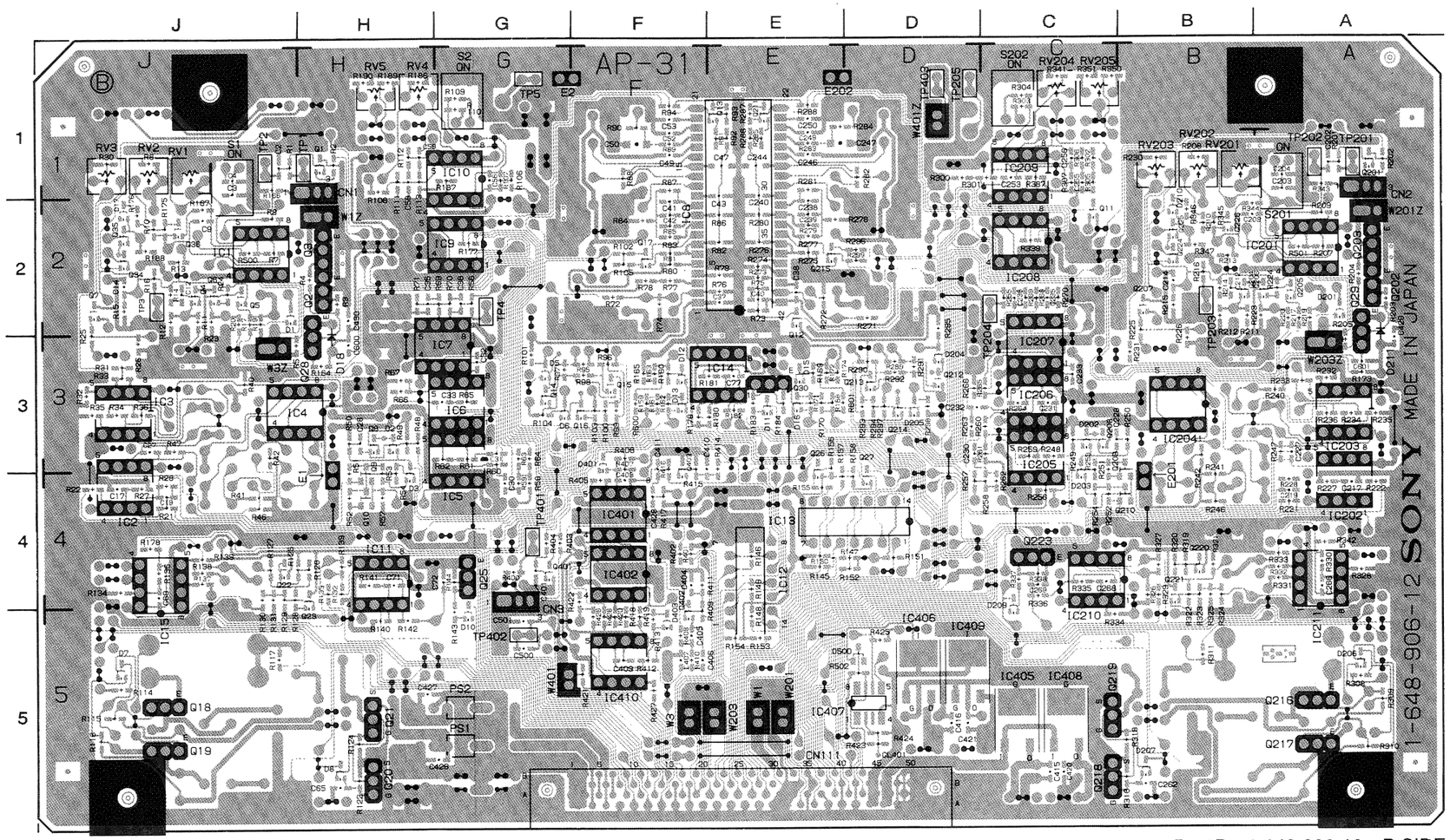

AP-31B 1-648-906-12 B SIDE

AP-34/34P ; AUDIO/TC PB AMP., RF HEAD AMP.

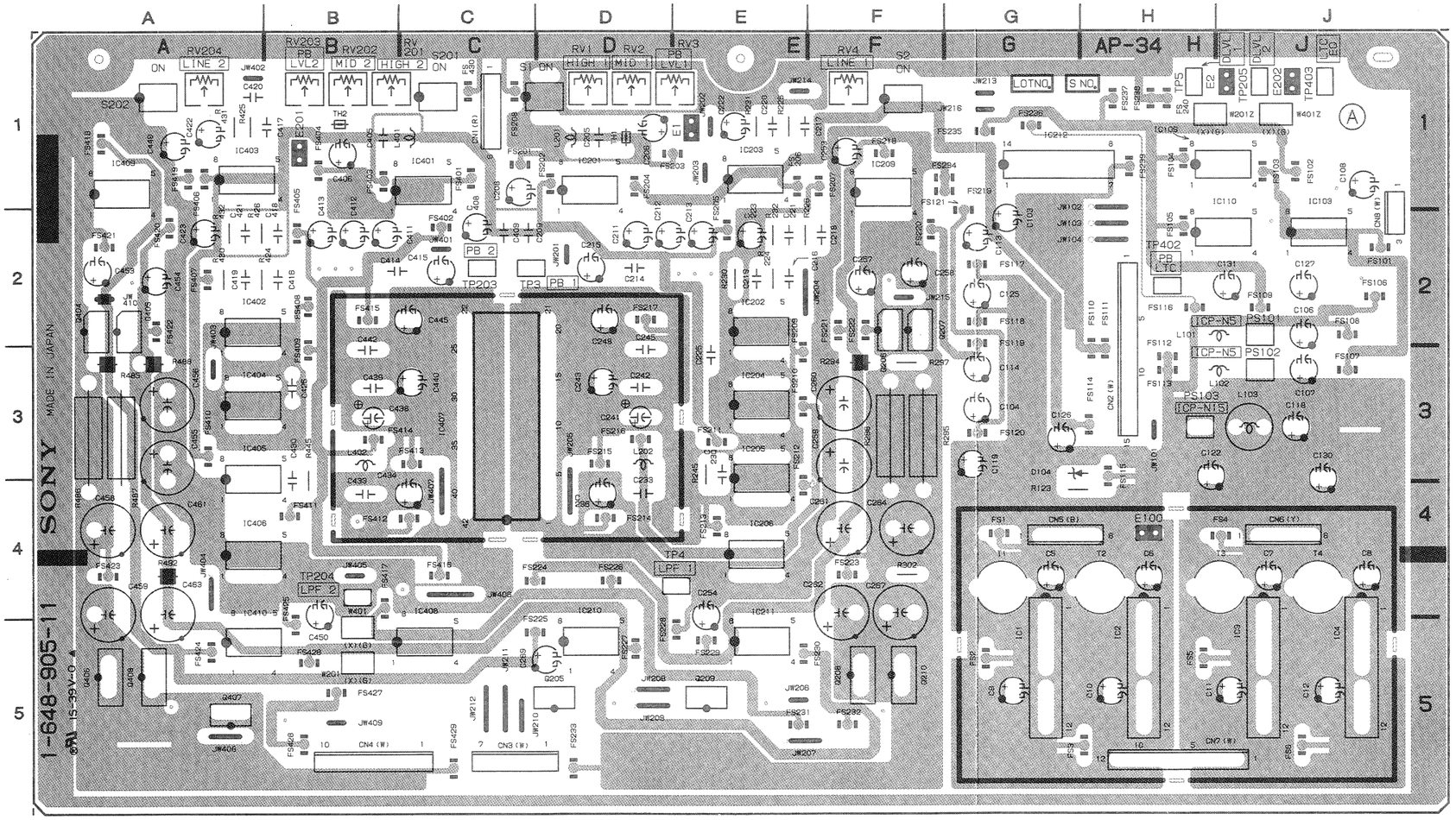

AP-34 1-648-905-11 A SIDE

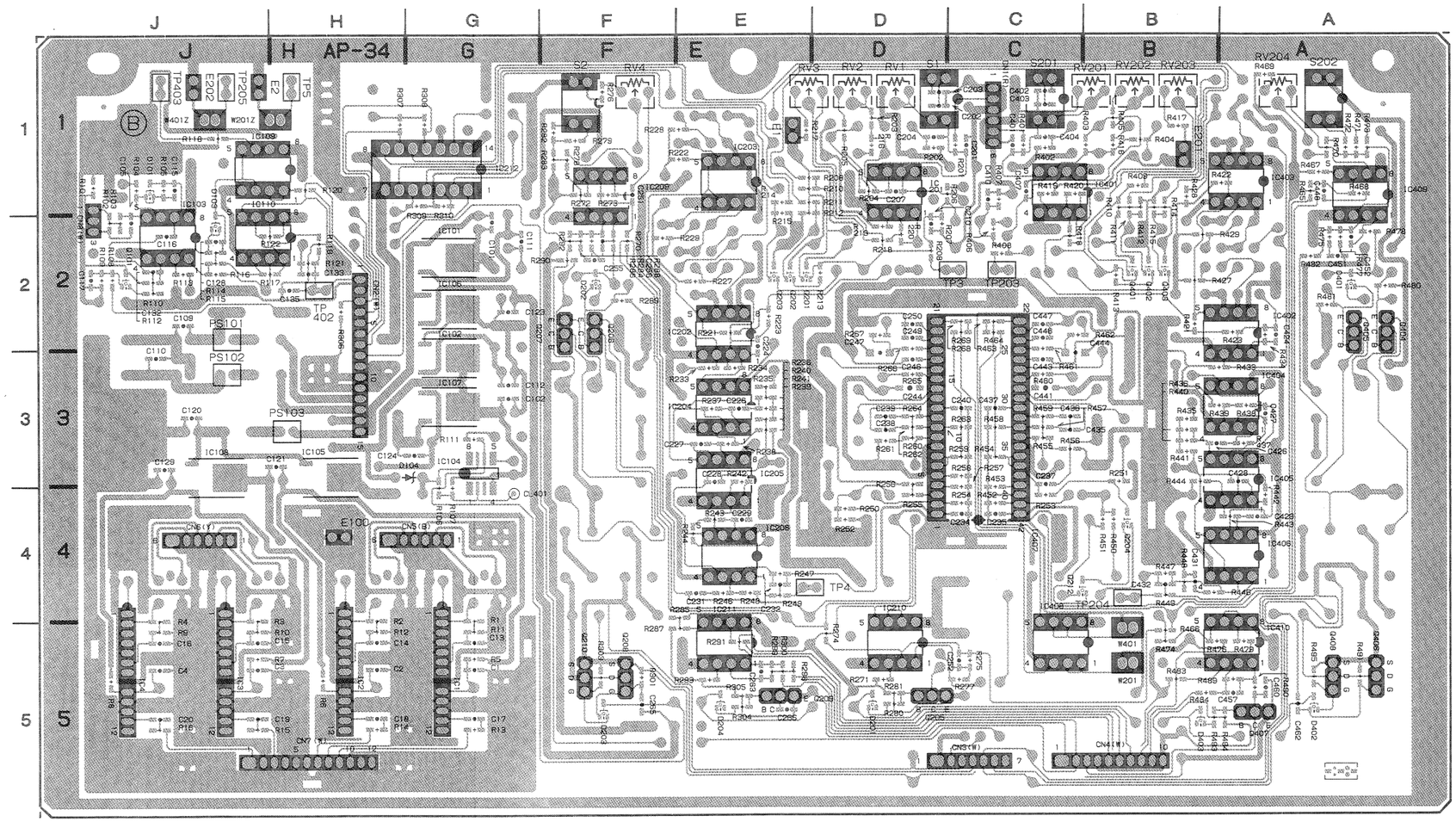

AP-34 1-648-905-11 B SIDE

AP-34/34P(1-648-905-11)

CN1	C-1	FS224	C-4	IC405	A-4
CN2	H-3	FS225	C-5	IC406	A-4
CN3	C-5	FS226	D-4	IC407	D-4
CN4	B-5	FS227	D-5	IC408	C-5
CN5	G-4	FS228	E-5	IC409	A-2
CN6	J-4	FS229	E-5	IC410	A-5
CN7	H-5	FS230	E-5		
CN8	J-2	FS231	E-5	PS101	J-2
		FS232	F-5	PS102	J-3
✱D101	J-1	FS233	D-5	PS103	H-3
✱D103	J-2	FS234	G-1		
D104	G-3	FS235	G-1	✱Q101	J-2
✱D201	D-5	FS236	G-1	✱Q201	E-2
✱D202	F-2	FS237	H-1	✱Q202	E-2
✱D203	F-5	FS238	H-1	✱Q203	E-2
✱D204	E-5	FS239	H-1	✱Q204	B-4
✱D401	A-2	FS240	H-1	Q205	D-5
✱D402	A-5	FS401	C-1	Q206	F-2
✱D403	B-5	FS402	C-2	Q207	F-2
		FS403	B-1	Q208	F-5
E1	E-1	FS404	B-1	Q209	E-5
E2	J-1	FS405	B-2	Q210	F-5
E100	H-4	FS406	A-1	✱Q212	C-4
E201	B-1	FS407	A-2	✱Q401	B-2
E202	J-1	FS408	B-2	✱Q402	B-2
		FS409	B-3	✱Q403	B-2
FS1	G-4	FS410	A-3	Q404	A-2
FS2	G-5	FS411	B-4	Q405	A-2
FS3	H-5	FS412	C-4	Q406	A-5
FS4	J-4	FS413	C-3	Q407	A-5
FS5	H-5	FS414	B-3	Q408	A-5
FS6	J-5	FS415	B-2		
FS101	J-2	FS416	C-4	RV1	D-1
FS102	J-1	FS417	B-4	RV2	D-1
FS103	J-1	FS418	A-1	RV3	E-1
FS104	H-1	FS419	A-1	RV4	F-1
FS105	H-2	FS420	A-2	RV201	B-1
FS106	J-2	FS421	A-2	RV202	B-1
FS107	J-3	FS422	A-2	RV203	B-1
FS108	J-2	FS423	A-4	RV204	A-1
FS109	J-2	FS424	A-5		
FS110	H-3	FS425	B-5	S1	D-1
FS111	H-3	FS426	B-5	S2	F-1
FS112	H-3	FS427	B-5	S201	C-1
FS113	H-3	FS428	B-5	S202	A-1
FS114	H-3	FS429	C-5		
FS115	H-3	FS430	C-1	TH1	D-1
FS116	H-2			TH2	B-1
FS117	G-2	IC1	G-4		
FS118	G-2	IC2	H-4	TP3	C-2
FS119	G-2	IC3	J-4	TP4	E-4
FS120	G-3	IC4	J-4	TP5	H-1
FS121	G-1	✱IC101	G-2	TP203	C-2
FS201	C-1	✱IC102	G-3	TP204	B-4
FS202	D-1	IC103	J-2	TP205	J-1
FS203	E-1	✱IC104	G-4	TP402	H-2
FS204	D-1	✱IC105	H-3	TP403	J-1
FS205	E-2	✱IC106	G-2		
FS206	E-1	✱IC107	G-3		
FS207	F-1	✱IC108	J-3		
FS208	C-1	IC109	H-1		
FS209	E-3	IC110	H-2		
FS210	E-3	IC201	D-1		
FS211	E-3	IC202	E-3		
FS212	E-4	IC203	E-1		
FS213	E-4	IC204	E-3		
FS214	D-4	IC205	E-4		
FS215	D-3	IC206	E-4		
FS216	D-3	IC209	F-2		
FS217	D-2	IC210	D-5		
FS218	F-1	IC211	E-5		
FS219	G-1	IC212	G-1		
FS220	F-2	IC401	C-1		
FS221	F-2	IC402	A-3		
FS222	F-2	IC403	A-1		
FS223	F-4	IC404	A-3		

✱ : B SIDE

AR-14A/14AP ; AUDIO/TC REC AMP., AUDIO BIAS DRIVER

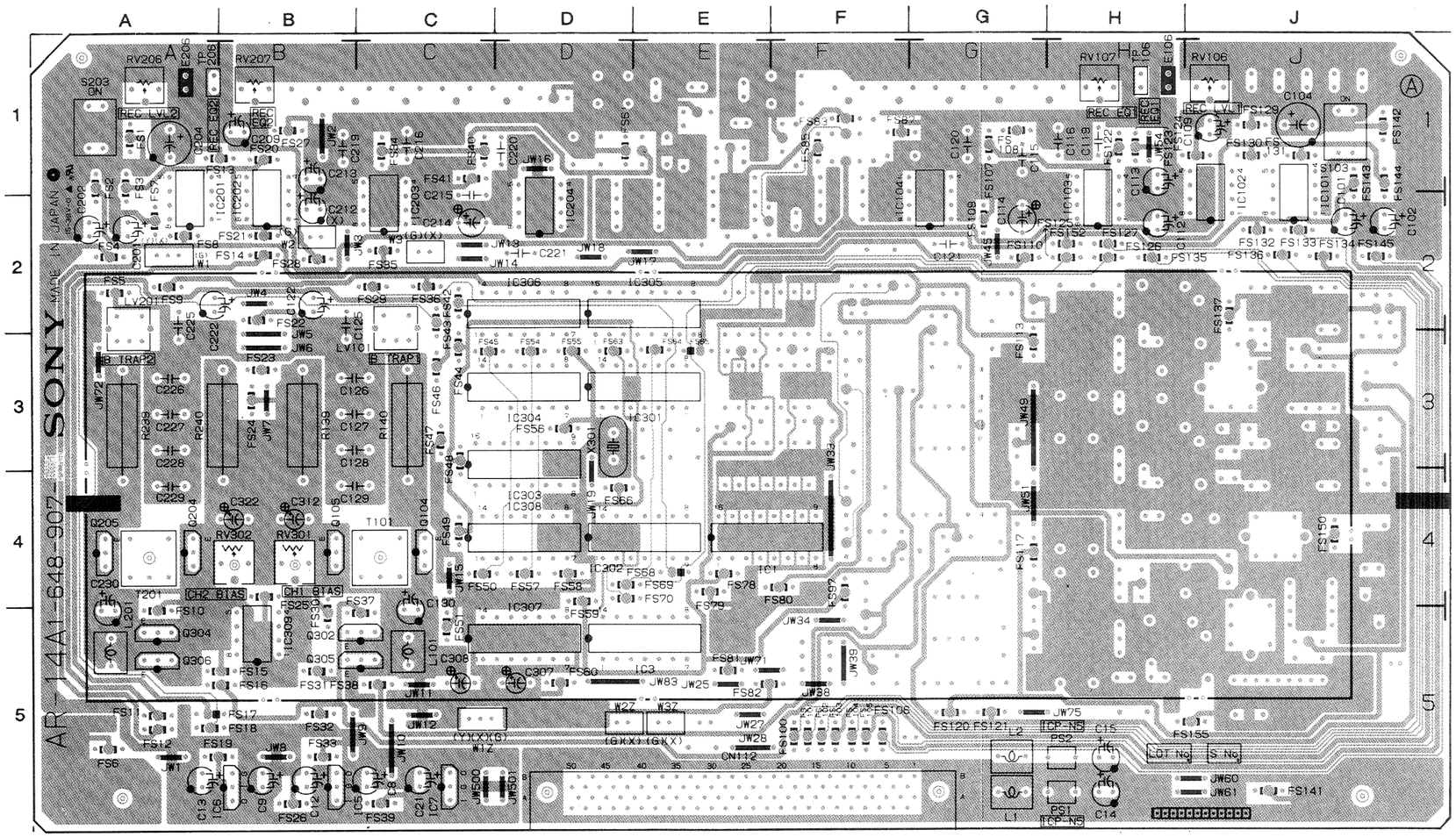
A
B
C
D
E
F
G
H
J
1
2
3
4
5
SONY
AR-14A1-648-907-
RV206
RV207
RV107
RV106
S203
REC LVL
REC EQ
C104
RV302
RV301
T101
CH2 BIAS
CH1 BIAS
IC304
IC301
IC303
IC308
IC307
IC202
IC1
IC3
IC305
IC306
IC1104
IC1024
IC1101
IC1103
IC2013
IC2023
IC2033
IC2043
Q205
Q204
Q304
Q306
Q302
Q305
Q201
Q104
Q105
X301
C230
C322
C312
C129
C130
C308
C307
C226
C227
C228
C229
C126
C127
C128
C222
C225
C212
C213
C214
C215
C219
C220
C221
C120
C121
C122
C123
C124
C125
C113
C114
C115
C116
C118
C119
C101
C102
R239
R240
R139
R140
JW72
JW1
JW2
JW3
JW4
JW5
JW6
JW7
JW8
JW9
JW10
JW11
JW12
JW13
JW14
JW15
JW16
JW17
JW18
JW19
JW20
JW21
JW22
JW25
JW26
JW27
JW28
JW30
JW31
JW32
JW33
JW34
JW35
JW36
JW37
JW38
JW39
JW45
JW48
JW51
JW52
JW53
JW54
JW55
JW56
JW57
JW58
JW59
JW60
JW61
JW75
JW83
W27
W37
W2
W3
W4
W5
W6
W7
W8
W9
W10
W11
W12
W13
W14
W15
W16
W17
W18
W19
W20
W21
W22
W23
W24
W25
W26
W28
W29
W30
W31
W32
W33
W34
W35
W36
W38
W39
W40
W41
W42
W43
W44
W45
W46
W47
W48
W49
W50
W51
W52
W53
W54
W55
W56
W57
W58
W59
W60
W61
W62
W63
W64
W65
W66
W67
W68
W69
W70
W71
W72
W73
W74
W75
W76
W77

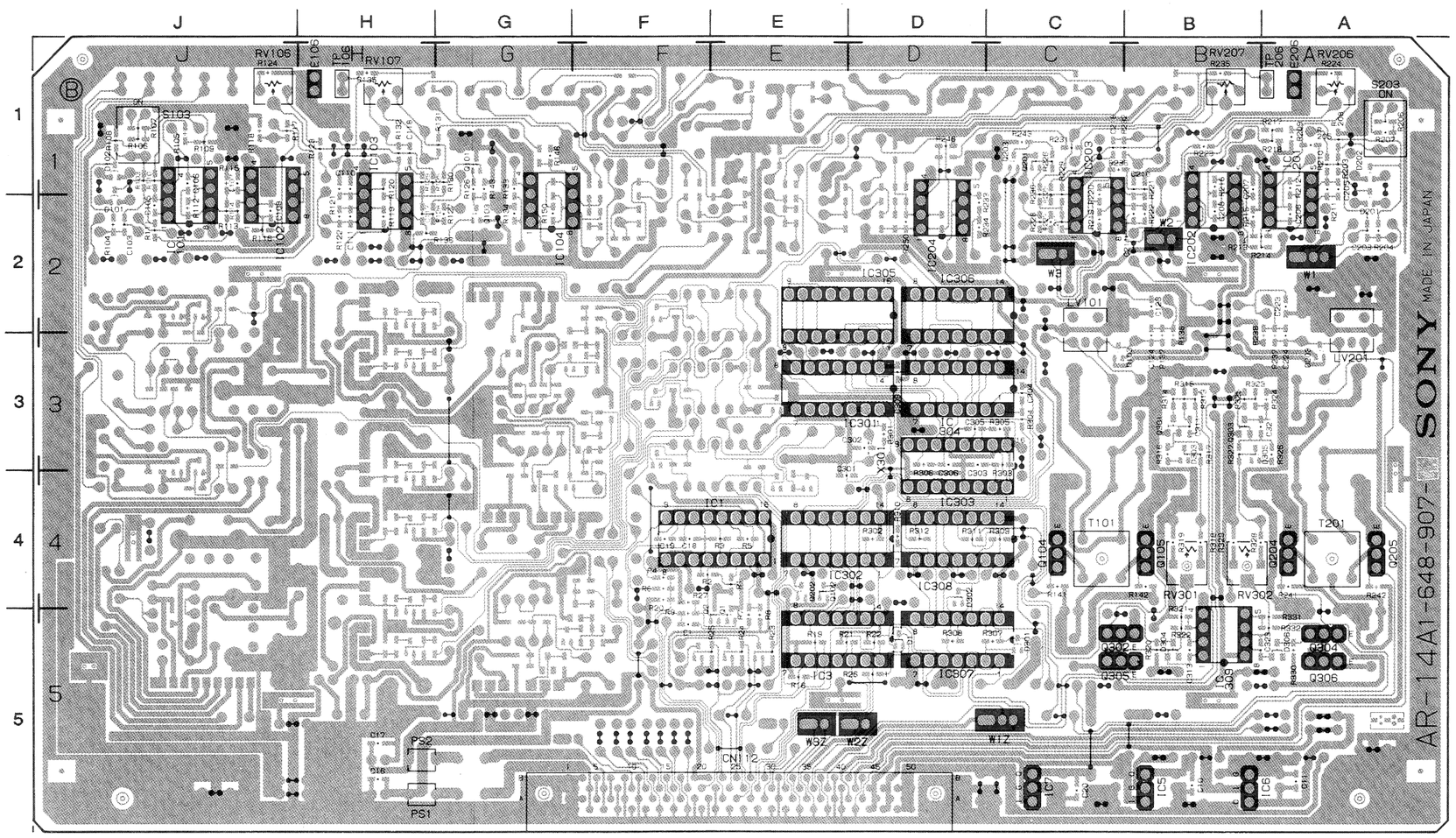
J H G F E D C B A
1 2 3 4 5
RV106 R124
RV107 R134
RV207 R235
RV206 R224
S103
S203 ON
IC305
IC306
IC301
IC303
IC302
IC308
IC307
IC1
IC104
IC204
IC202
IC201
IC203
IC5
IC6
LV101
LV201
T101
T201
Q104
Q105
Q204
Q205
Q302
Q303
Q304
Q305
Q306
RV301
RV302
W3
W1
W2
W4
W5
W6
W7
W8
W9
W10
W11
W12
W13
W14
W15
W16
W17
W18
W19
W20
W21
W22
W23
W24
W25
W26
W27
W28
W29
W30
W31
W32
W33
W34
W35
W36
W37
W38
W39
W40
W41
W42
W43

CP-225B ; VIDEO INPUT/OUTPUT CONNECTOR

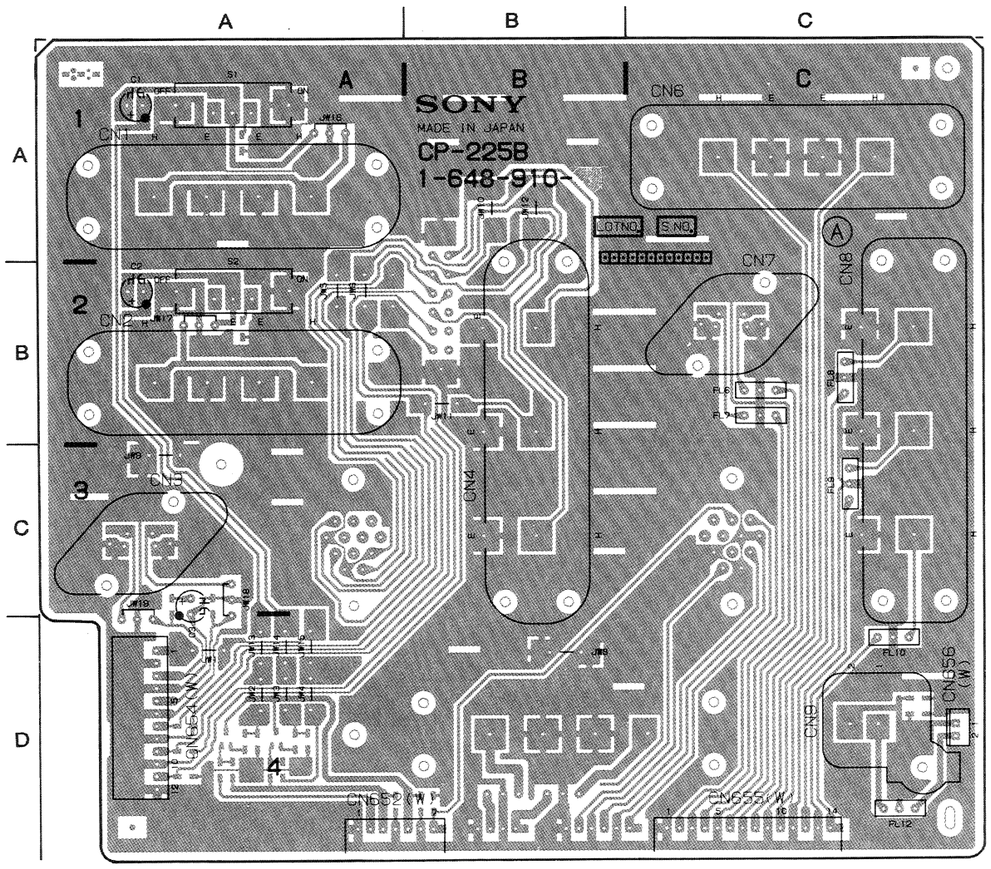

CP-225B 1-648-910-31,32 A SIDE

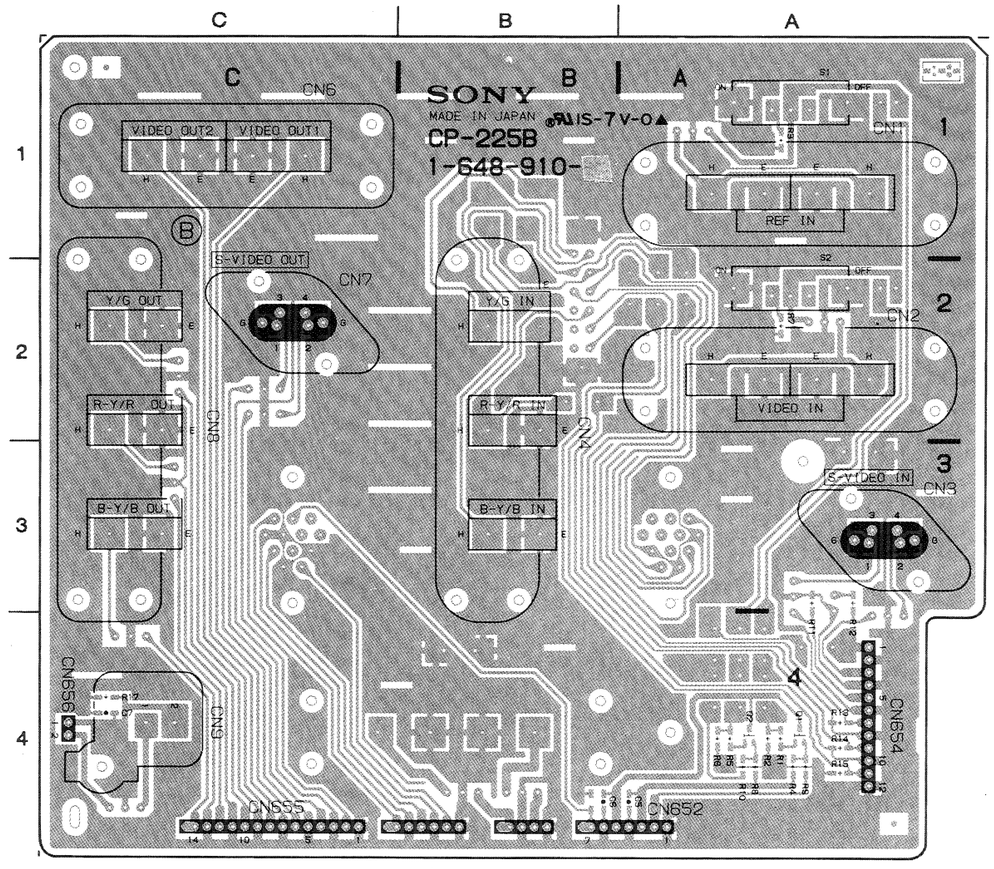

CP-225B 1-648-910-31,32 B SIDE

CP-225C ; VIDEO OUTPUT CONNECTOR

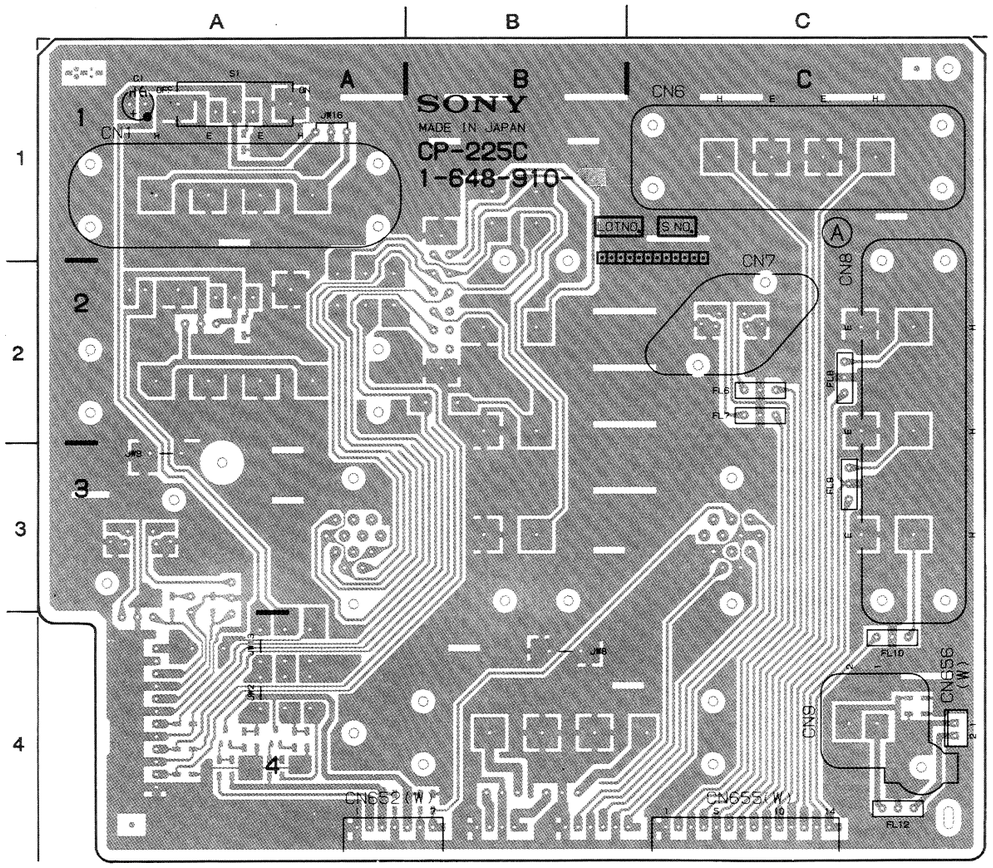

CP-225C 1-648-910-41,42 A SIDE

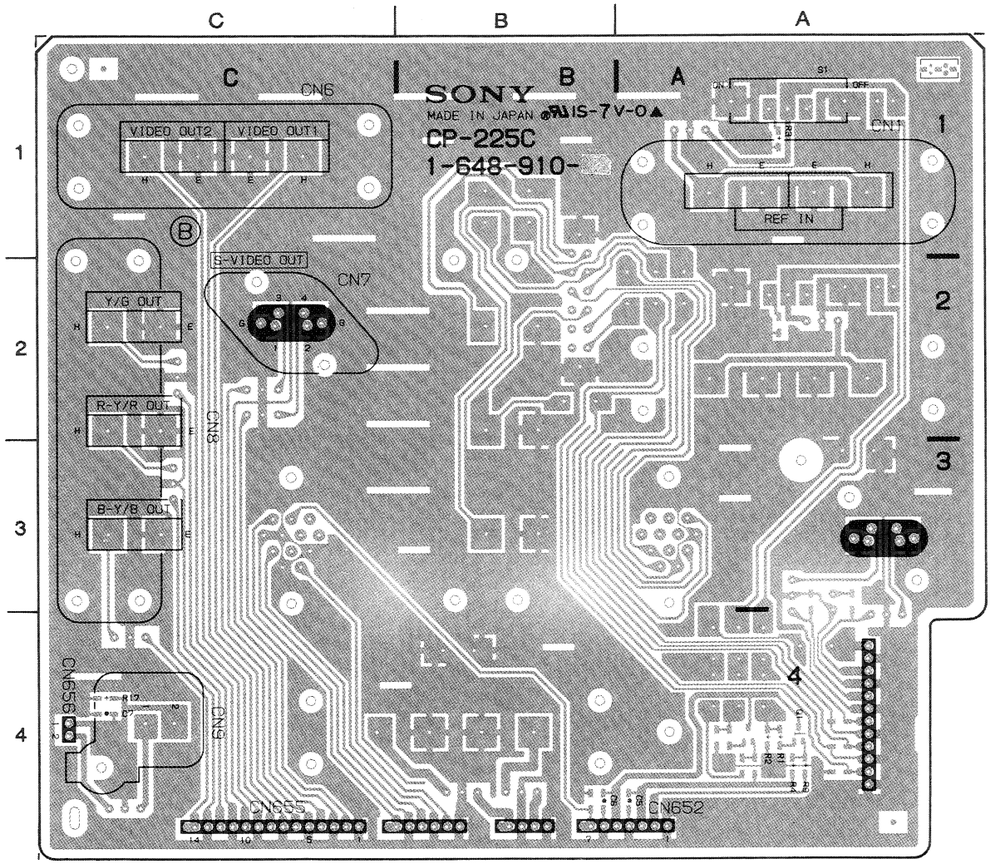

CP-225C 1-648-910-41,42 B SIDE

CP-226 ; AUDIO INPUT/OUTPUT CONNECTOR, OUTPUT TRANSFORMER(FOR UC, EK)
CP-226J ; AUDIO INPUT/OUTPUT CONNECTOR, OUTPUT TRANSFORMER(FOR J)
CP-226A ; AUDIO OUTPUT CONNECTOR, OUTPUT TRANSFORMER(FOR UC, EK)
CP-226AJ ; AUDIO OUTPUT CONNECTOR, OUTPUT TRANSFORMER(FOR J)

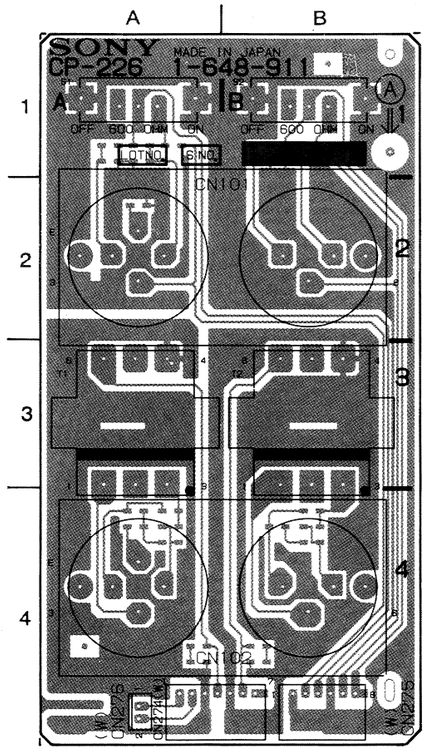

CP-226/226J 1-648-911-11,12 A SIDE

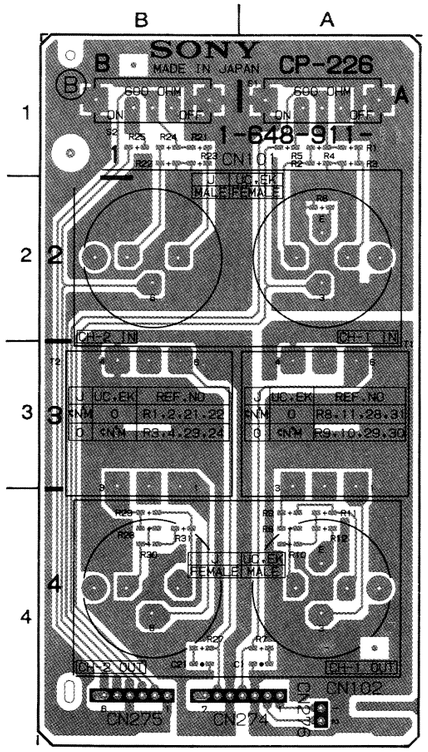

CP-226/226J 1-648-911-11,12 B SIDE

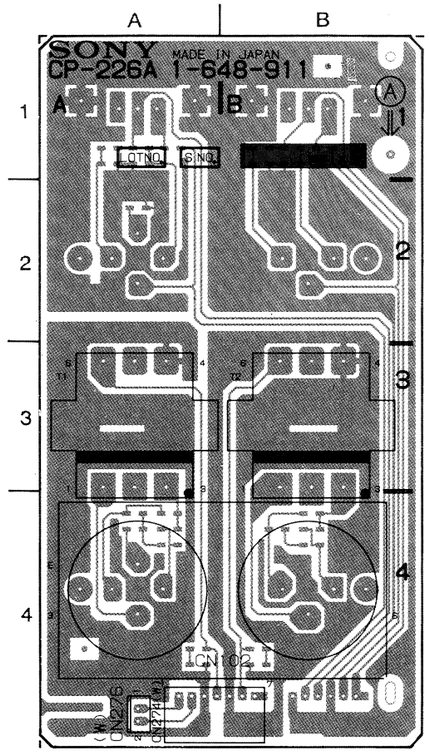

CP-226A/226AJ 1-648-911-21,22 A SIDE

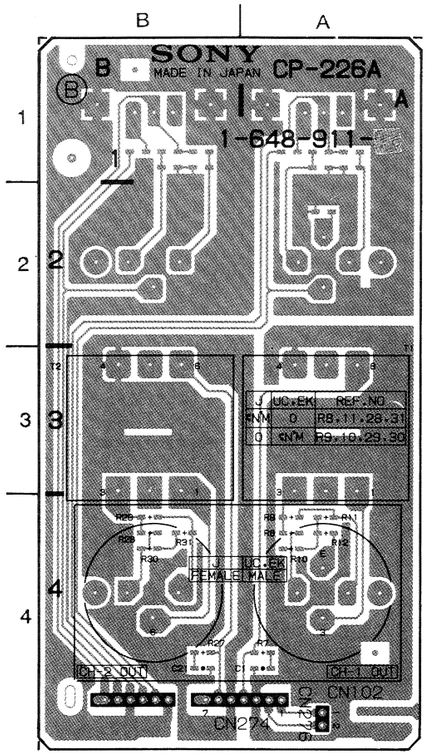

CP-226A/226AJ 1-648-911-21,22 B SIDE

CP-239 ; 25P REMOTE CONNECTOR

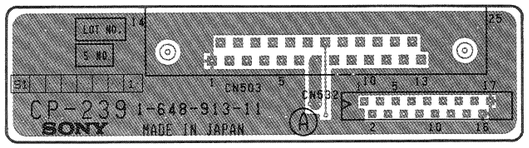

CP-239 1-648-913-11 A SIDE

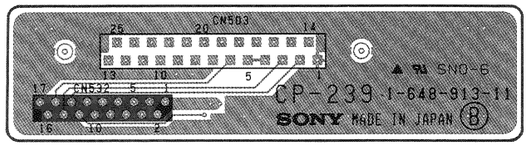

CP-239 1-648-913-11 B SIDE

DR-214 ; MOTOR DRIVER, TENSION SENS. AMP., DRUM FG/PG AMP., CAPSTAN FG AMP., CTL REC/PB AMP.

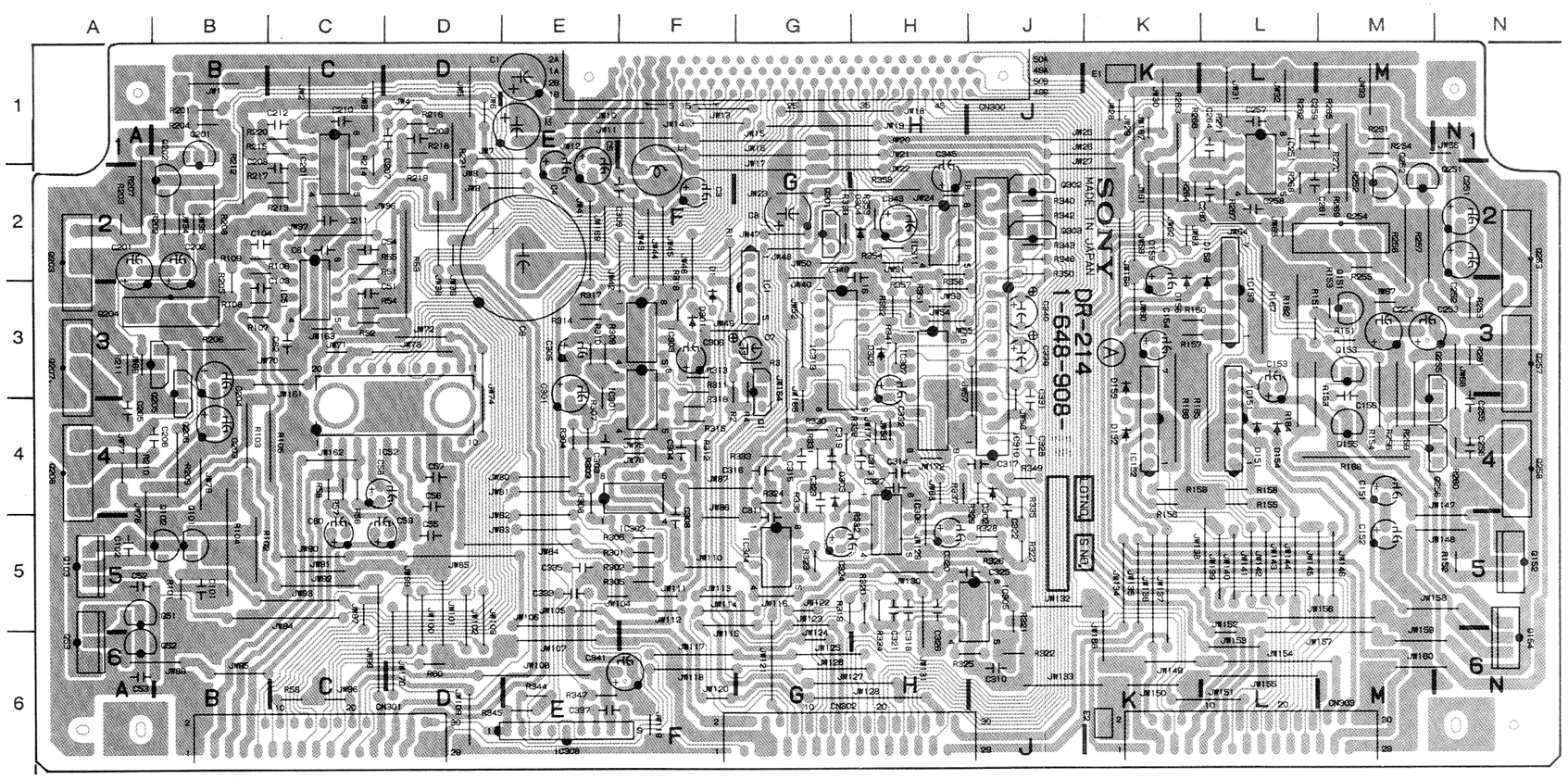

DR-214 1-648-908-11,12 A SIDE

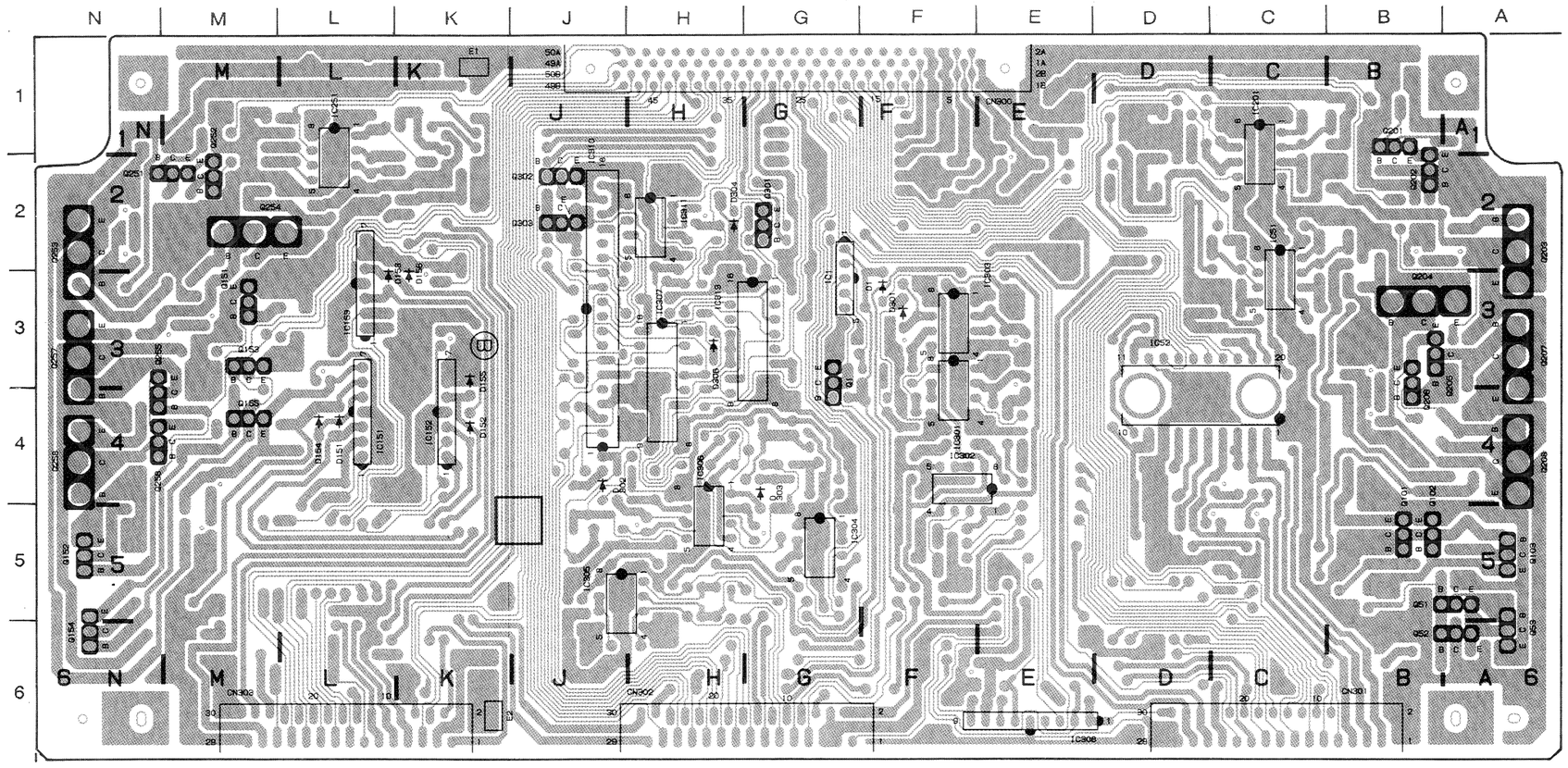

DR-214 1-648-908-11,12 B SIDE

DR-214 (1-648-908-11,12)

CN300	H-1
CN301	C-5
CN302	H-5
CN303	L-5
D1	G-2
D151	L-3
D152	K-3
D153	L-2
D154	M-3
D155	K-3
D156	L-2
D301	G-2
D302	J-4
D303	H-4
D304	H-2
D306	H-3
E1	K-1
E2	K-5
IC1	G-2
IC51	C-2
IC52	D-3
IC151	L-4
IC152	L-4
IC153	L-2
IC201	C-1
IC251	L-1
IC301	F-3
IC302	F-4
IC303	F-2
IC304	G-4
IC305	J-5
IC306	H-4
IC307	J-2
IC308	E-5
IC310	J-3
IC311	J-1
IC313	H-2
Q1	G-3
Q51	B-5
Q52	B-5
Q53	B-5
Q101	B-4
Q102	B-4
Q103	B-4
Q151	M-2
Q152	N-4
Q153	M-3
Q154	N-5
Q155	M-3
Q201	B-1
Q202	B-1
Q203	B-2
Q204	B-2
Q205	B-3
Q206	B-3
Q207	B-3
Q208	B-4
Q251	N-1
Q252	N-1
Q253	N-2
Q254	M-2
Q255	N-3
Q256	N-3
Q257	N-3
Q258	N-4
Q301	H-2
Q302	K-1
Q303	K-2

✱ : B SIDE

KY-290 ; FUNCTION KEY, FL DISPLAY

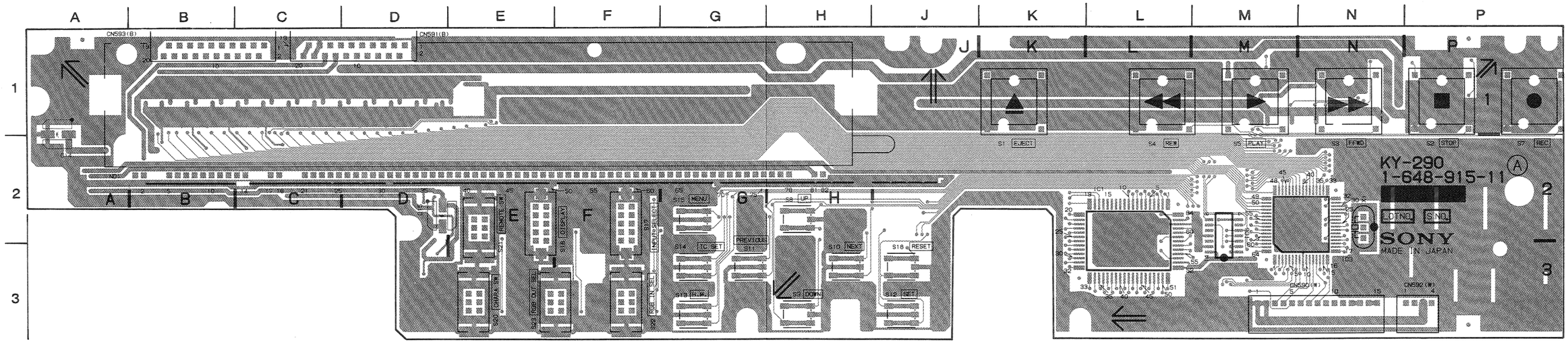

KY-290 1-648-915-11 A SIDE

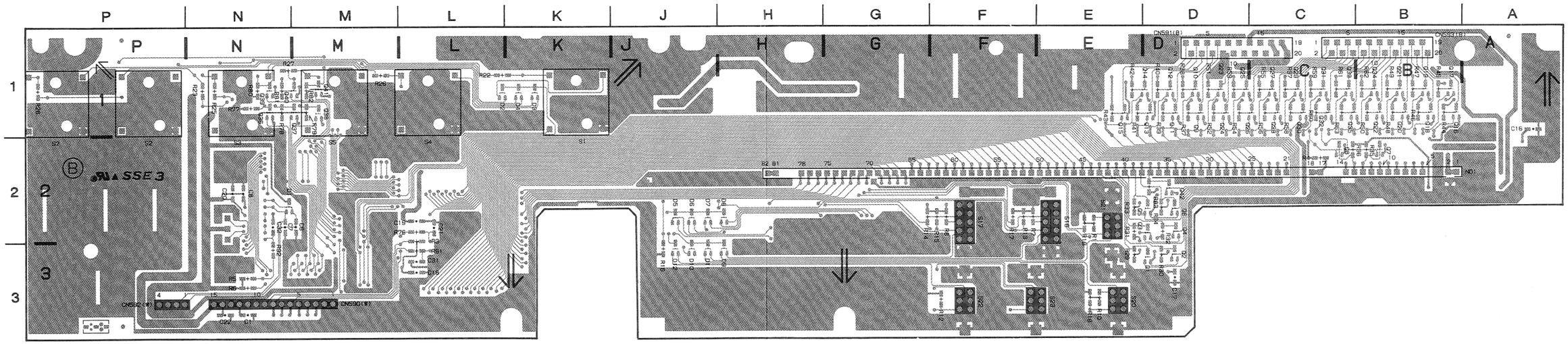

KY-290 1-648-915-11 B SIDE

KY-290(1-648-915-11)

CN590	N-3	S11	G-3
CN591	D-1	S12	J-3
CN592	P-3	S13	G-3
CN593	B-1	S14	G-3
		S15	G-2
✱D1	N-2	S16	E-2
✱D2	L-1	S17	F-2
✱D3	K-1	S18	J-3
✱D4	K-1	S20	E-3
✱D5	J-2	S21	E-2
✱D6	J-2	S22	F-3
✱D7	J-2	S23	F-3
✱D8	H-2		
✱D9	H-3	X1	N-2
✱D10	J-3		
✱D11	J-3		
✱D12	J-3		
IC1	L-2		
IC3	N-2		
IC6	M-3		
ND1	E-2		
✱Q1	D-3		
✱Q2	D-3		
✱Q3	D-2		
✱Q4	D-2		
✱Q5	D-2		
✱Q6	D-2		
✱Q7	B-2		
✱Q8	C-2		
✱Q9	D-1		
✱Q10	D-1		
✱Q11	D-1		
✱Q12	D-1		
✱Q13	D-1		
✱Q14	D-1		
✱Q15	E-1		
✱Q16	B-1		
✱Q17	B-1		
✱Q18	B-1		
✱Q19	B-1		
✱Q20	B-1		
✱Q21	B-1		
✱Q22	B-1		
✱Q23	D-1		
✱Q24	D-1		
✱Q25	D-1		
✱Q26	C-1		
✱Q27	C-1		
✱Q28	C-1		
✱Q29	C-1		
✱Q30	C-1		
✱Q31	C-1		
✱Q32	C-1		
✱Q33	C-1		
✱Q34	B-1		
✱Q35	C-1		
✱Q36	N-1		
✱Q37	M-1		
✱Q38	M-1		
✱Q39	N-1		
✱Q40	M-1		
✱Q41	M-1		
✱Q42	D-2		
S1	K-1		
S2	P-1		
S3	N-1		
S4	L-1		
S5	M-1		
S7	P-1		
S8	H-2		
S9	H-3		
S10	H-3		

✱ : B SIDE

KY-290A ; FUNCTION KEY, FL DISPLAY

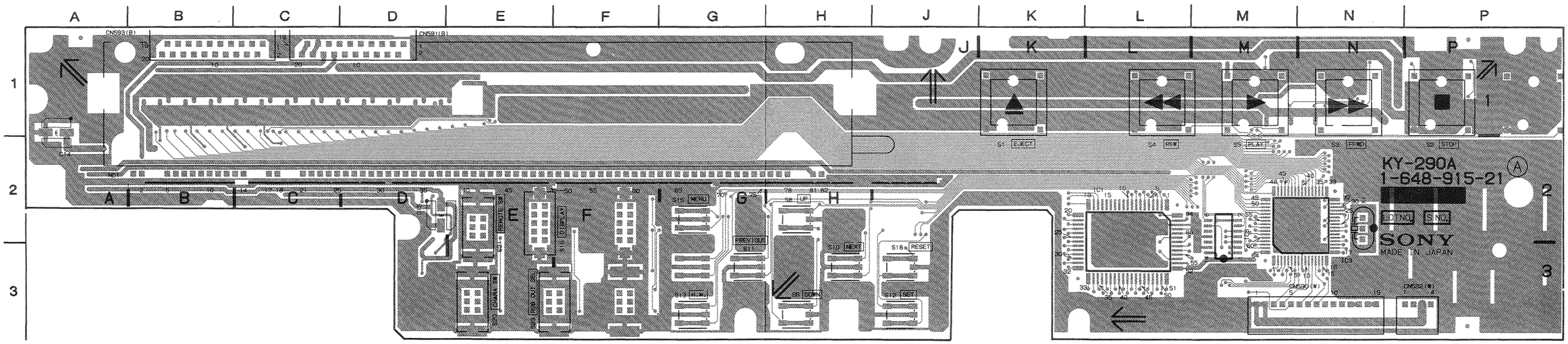

KY-290A 1-648-915-21 A SIDE

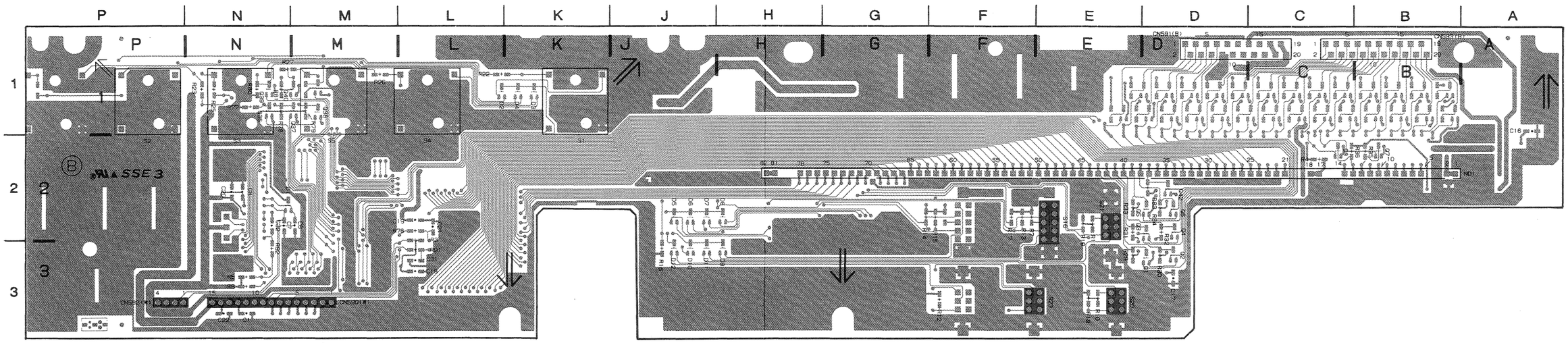

KY-290A 1-648-915-21 B SIDE

KY-290A(1-648-915-21)

CN590	N-3
CN591	D-1
✱D1	N-2
✱D2	L-1
✱D3	K-1
✱D4	K-1
✱D5	J-2
✱D6	J-2
✱D7	J-2
✱D8	H-2
✱D9	H-3
✱D10	J-3
✱D11	J-3
✱D12	J-3
IC1	L-2
IC3	N-2
IC6	M-3
ND1	E-2
✱Q1	D-3
✱Q2	D-3
✱Q3	D-2
✱Q4	D-2
✱Q5	D-2
✱Q6	D-2
✱Q7	B-2
✱Q8	C-2
✱Q36	N-1
✱Q37	M-1
✱Q38	M-1
✱Q39	N-1
✱Q40	M-1
✱Q42	D-2
S1	K-1
S2	P-1
S3	N-1
S4	L-1
S5	M-1
S8	H-2
S9	H-3
S10	H-3
S11	G-3
S12	J-3
S13	G-3
S15	G-2
S16	E-2
S18	J-3
S20	E-3
S21	E-2
S23	F-3
X1	N-2

✱ : B SIDE

MS-39/39A ; CASSETTE INFORMATION, SOLENOID DRIVER, MECHA. CONTROL MPU, DATA STORAGE

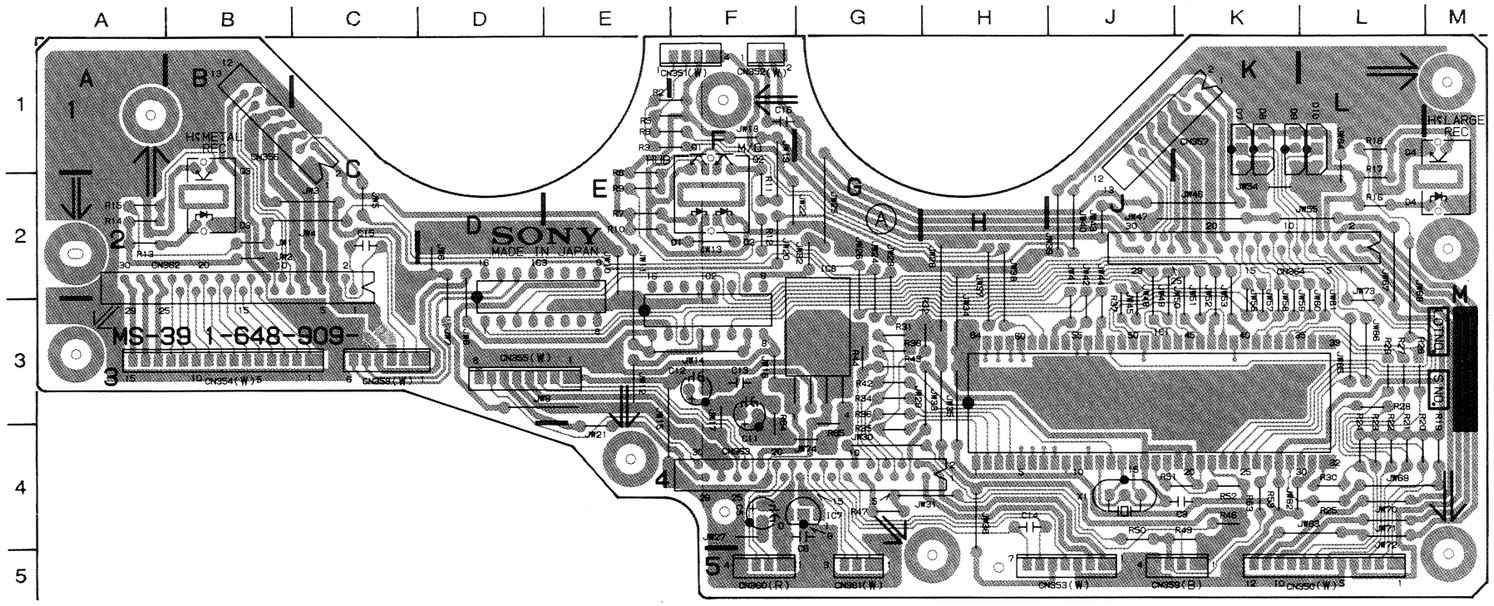

MS-39/39A 1-648-909-11,12 A SIDE

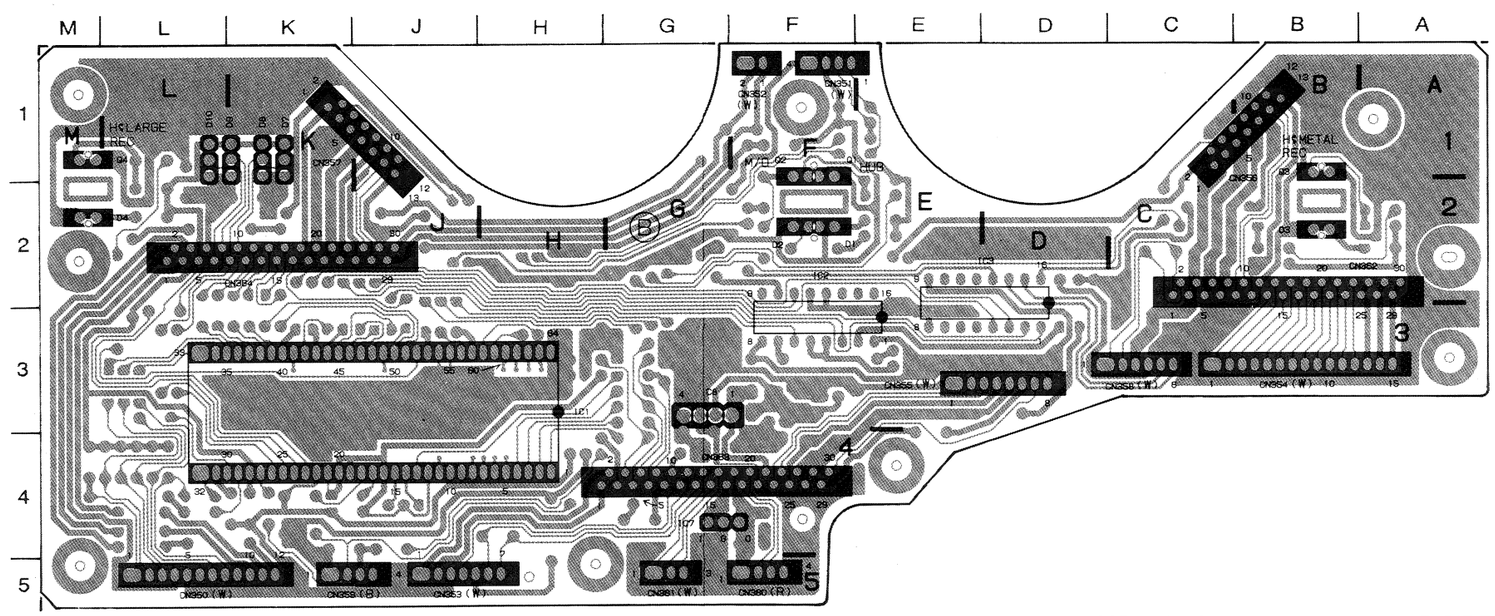

MS-39/39A 1-648-909-11,12 B SIDE

MS-39/39A (1-648-909-11,12)

CN350	L-5
CN351	F-1
CN352	F-1
CN353	J-5
CN354	B-3
CN355	D-3
CN356	B-1
CN357	J-1
CN358	C-3
CN359	K-5
CN360	F-5
CN361	G-5
CN362	B-2
CN363	G-4
CN364	K-2
D1	F-2
D2	F-2
D3	B-2
$\overline{D4}$	M-2
$\overline{D7}$	K-1
D8	K-1
D9	K-1
D10	L-1
IC1	H-4
IC2	E-3
IC3	D-3
IC7	G-4
IC8	G-3
Q1	F-1
Q2	F-1
Q3	B-1
$\overline{Q4}$	M-1
X1	J-4

✱ : B SIDE
__ : UVW-1400/1400P ONLY

RP-70B/70BP ; RF REC/PB AMP., FULL ERASE OSC.

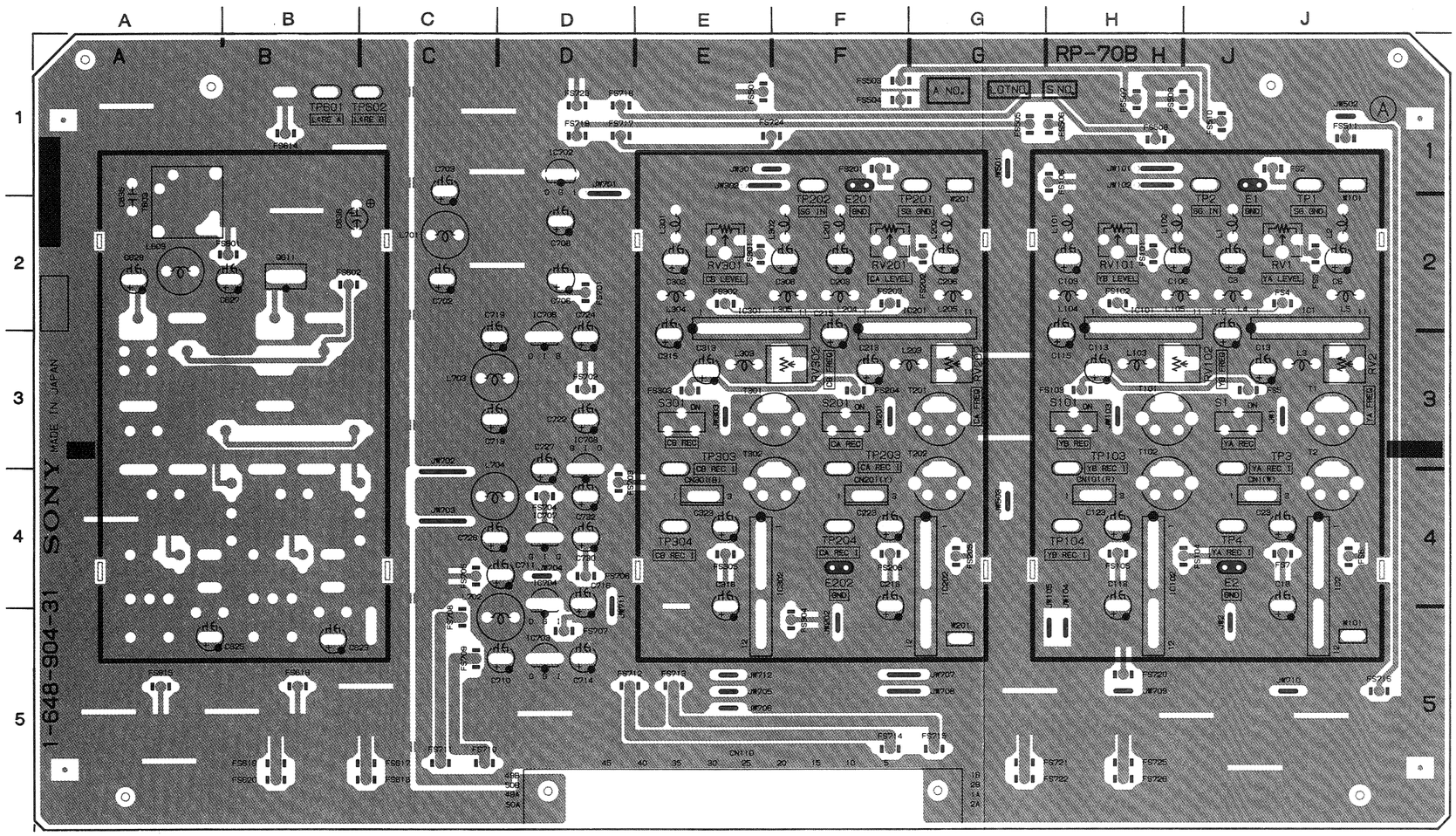

RP-70B 1-648-904-31 A SIDE

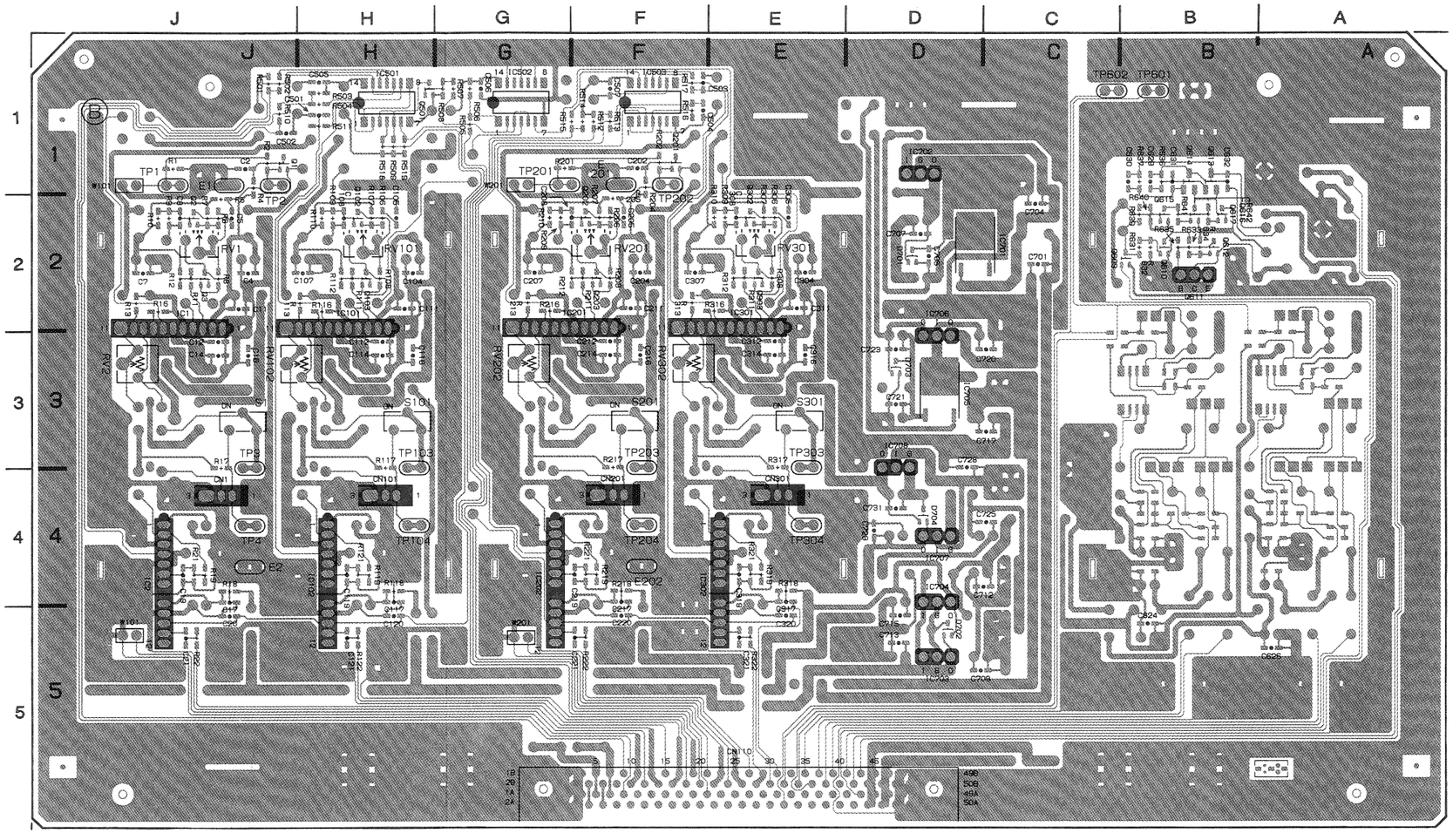

RP-70B 1-648-904-31 B SIDE

RP-70B/70BP(1-648-904-31)

CN1	J-4	FS716	J-5	TP202	F-1
CN101	H-4	FS717	D-1	TP203	F-3
CN110	E-5	FS718	D-1	TP204	F-4
CN201	F-4	FS719	D-1	TP303	E-3
CN301	E-4	FS720	H-5	TP304	E-4
		FS721	G-5		
✱D701	D-2	FS722	G-5		
✱D702	D-5	FS723	D-1		
✱D703	D-3	FS724	E-1		
✱D704	D-4	FS725	H-5		
		FS726	H-5		
E1	J-1				
E2	J-4	IC1	J-2		
E201	F-1	IC2	J-4		
E202	F-4	IC101	H-2		
		IC102	H-4		
FS2	J-1	IC201	F-2		
FS3	J-2	IC202	G-4		
FS4	J-2	IC301	E-2		
FS5	J-3	IC302	E-4		
FS6	J-4	✱IC501	H-1		
FS7	J-4	✱IC502	G-1		
FS101	H-2	✱IC503	F-1		
FS102	H-2	✱IC701	D-2		
FS103	H-3	IC702	D-1		
FS104	H-4	IC703	D-5		
FS105	H-4	IC704	D-4		
FS106	H-1	✱IC705	D-3		
FS201	F-1	IC706	D-3		
FS202	G-2	IC707	D-4		
FS203	F-2	IC708	D-3		
FS204	F-3				
FS205	G-4	✱Q1	J-1		
FS206	F-4	✱Q2	J-2		
FS301	E-2	✱Q3	J-2		
FS302	E-2	✱Q102	H-2		
FS303	E-3	✱Q103	H-2		
FS304	F-5	✱Q201	F-1		
FS305	E-4	✱Q202	F-2		
FS501	E-1	✱Q203	F-2		
FS503	F-1	✱Q302	E-2		
FS504	F-1	✱Q303	E-2		
FS505	G-1	✱Q501	H-1		
FS506	H-1	✱Q609	B-2		
FS507	H-1	✱Q610	B-2		
FS508	H-1	Q611	B-2		
FS509	H-1	✱Q612	B-2		
FS510	J-1	✱Q613	B-1		
FS511	J-1	✱Q614	B-1		
FS601	B-2	✱Q615	B-2		
FS602	B-2	✱Q616	B-2		
FS610 P	A-3	✱Q617	B-2		
FS614	B-1				
FS615	A-5	RV1	J-2		
FS616	B-5	RV2	J-3		
FS617	C-5	RV101	H-2		
FS618	C-5	RV102	H-3		
FS619	B-5	RV201	F-2		
FS620	B-5	RV202	G-3		
FS701	D-2	RV301	E-2		
FS702	D-3	RV302	F-3		
FS703	D-4				
FS704	D-4	S1	J-3		
FS705	C-4	S101	H-3		
FS706	D-4	S201	F-3		
FS707	D-5	S301	E-3		
FS708	C-5				
FS709	C-5	TP1	J-1		
FS710	C-5	TP2	J-1		
FS711	C-5	TP3	J-3		
FS712	D-5	TP4	J-4		
FS713	E-5	TP103	H-3		
FS714	F-5	TP104	H-4		
FS715	G-5	TP201	G-1		

✱ : B SIDE
P : UVW-1400P ONLY

SS-53A ; SYSTEM CONTROL, SERVO SYSTEM MAIN, TIME CODE GENERATOR/READER, CHARACTER GENERATOR

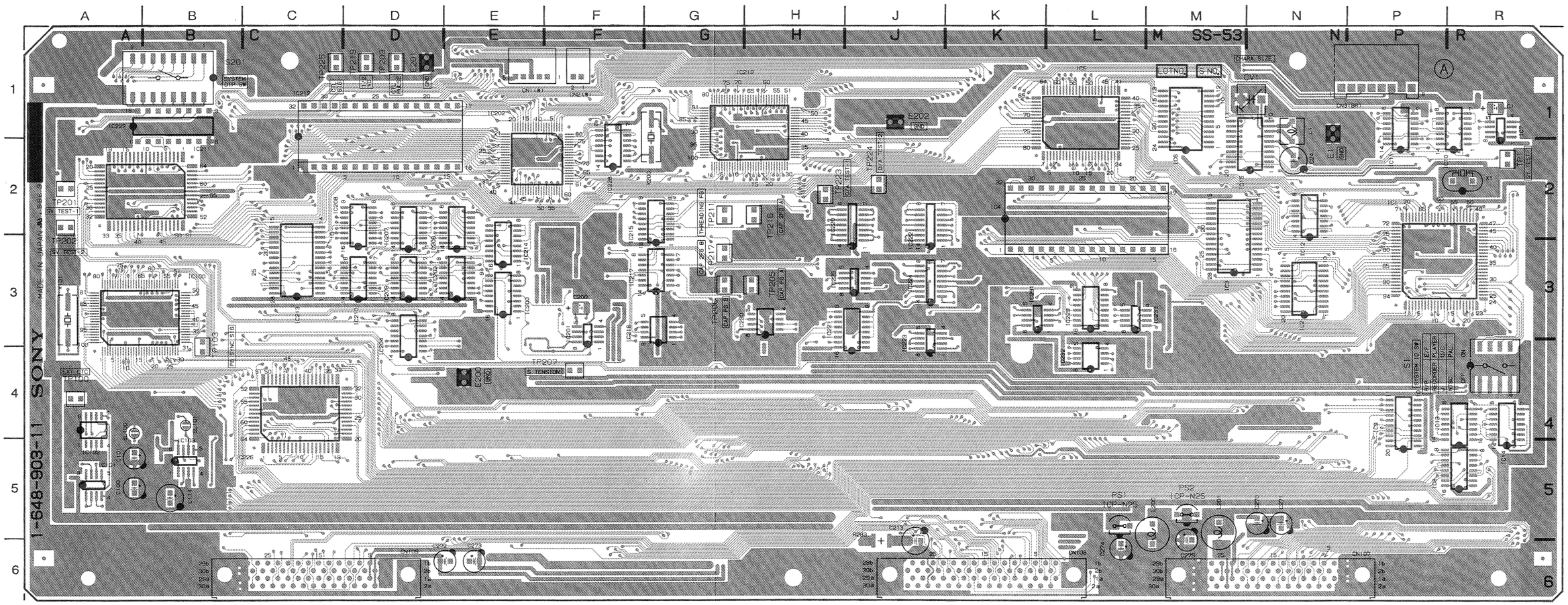

SS-53A 1-648-903-11 A SIDE

SS-53A(1-648-903-11)

CNI4	K-3	IC222	J-3
CNI212	C-2	IC223	J-4
		IC224	J-3
CN1	E-1	IC225	J-3
CN2	F-1	IC226	C-4
CN3	P-1	IC227	A-2
CN107	N-6	IC228	F-2
CN108	K-6	IC229	L-3
CN109	C-6	IC230	H-3
		IC231	L-3
CV1	N-1	IC232	L-4
		IC233	M-3
✱D100	A-5		
✱D101	A-5	PS1	L-5
✱D102	A-5	PS2	M-5
✱D103	A-5		
✱D104	A-5	✱Q105	B-5
✱D105	B-4	✱Q106	B-5
✱D200	E-3	✱Q107	B-4
✱D201	E-3	✱Q108	B-5
✱D202	E-3	✱Q204	D-5
✱D203	E-3	✱Q205	D-5
✱D204	E-3	✱Q206	D-5
✱D205	E-2	✱Q207	D-5
✱D206	F-3	✱Q208	D-5
✱D207	F-3	✱Q209	D-5
✱D208	E-3	✱Q210	J-3
✱D210	G-4	✱Q211	J-3
✱D211	E-2		
✱D213	E-3	✱RB1	P-3
✱D214	J-6	✱RB2	R-2
✱D215	J-5	✱RB201	E-1
		✱RB202	B-1
E1	N-1	✱RB203	K-4
E200	E-4		
E201	D-1	S1	R-4
E202	J-1	S201	B-1
IC1	P-3	TP1	R-2
IC2	N-3	TP100	A-4
IC3	N-3	TP103	B-4
IC4	K-3	TP201	A-2
IC5	L-1	TP202	A-2
IC6	M-2	TP203	D-1
IC7	R-1	TP205	H-3
IC9	P-5	TP206	G-3
IC10	R-2	TP207	F-4
IC11	P-2	TP211	G-2
IC12	N-2	TP216	H-2
IC13	R-4	TP217	G-3
IC14	R-4	TP219	D-1
IC15	N-2	TP223	H-2
IC100	A-3	TP224	J-2
IC101	A-5	TP225	C-1
IC102	A-5		
IC103	B-5	X1	R-2
IC200	E-3	X101	A-3
IC201	F-4	X200	G-1
IC202	E-2		
IC203	E-3		
IC204	D-4		
IC206	E-3		
IC207	D-3		
IC208	D-3		
IC209	D-3		
IC210	D-3		
IC211	B-2		
IC212	C-2		
IC213	C-3		
IC214	E-3		
IC215	G-3		
IC216	G-3		
IC217	G-3		
IC219	H-1		
IC220	J-3		
IC221	J-4		

✱ : B SIDE

SS-53A ; SYSTEM CONTROL, SERVO SYSTEM MAIN, TIME CODE GENERATOR/READER, CHARACTER GENERATOR

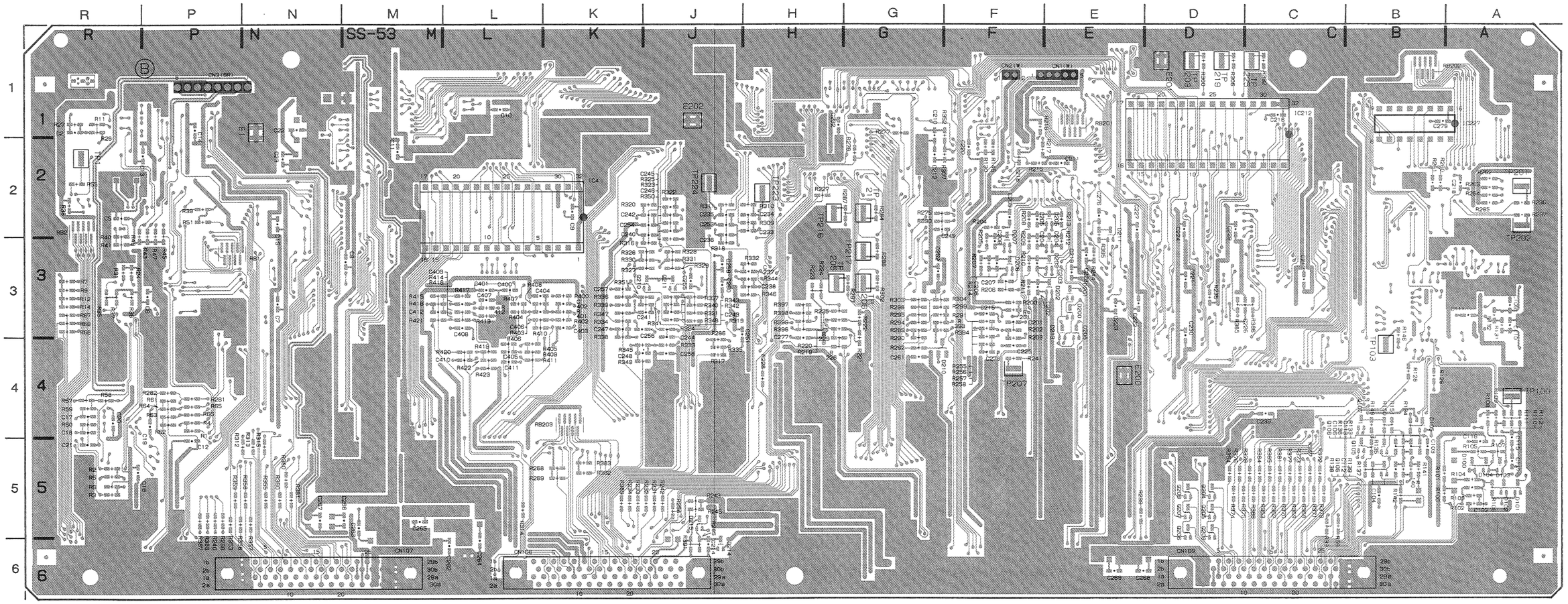

SS-53A 1-648-903-11 B SIDE

SS-53A(1-648-903-11)

CNI4	K-3	IC222	J-3
CNI212	C-2	IC223	J-4
		IC224	J-3
CN1	E-1	IC225	J-3
CN2	F-1	IC226	C-4
CN3	P-1	IC227	A-2
CN107	N-6	IC228	F-2
CN108	K-6	IC229	L-3
CN109	C-6	IC230	H-3
		IC231	L-3
CV1	N-1	IC232	L-4
		IC233	M-3
✱D100	A-5		
✱D101	A-5	PS1	L-5
✱D102	A-5	PS2	M-5
✱D103	A-5		
✱D104	A-5	✱Q105	B-5
✱D105	B-4	✱Q106	B-5
✱D200	E-3	✱Q107	B-4
✱D201	E-3	✱Q108	B-5
✱D202	E-3	✱Q204	D-5
✱D203	E-3	✱Q205	D-5
✱D204	E-3	✱Q206	D-5
✱D205	E-2	✱Q207	D-5
✱D206	F-3	✱Q208	D-5
✱D207	F-3	✱Q209	D-5
✱D208	E-3	✱Q210	J-3
✱D210	G-4	✱Q211	J-3
✱D211	E-2		
✱D213	E-3	✱RB1	P-3
✱D214	J-6	✱RB2	R-2
✱D215	J-5	✱RB201	E-1
		✱RB202	B-1
E1	N-1	✱RB203	K-4
E200	E-4		
E201	D-1	S1	R-4
E202	J-1	S201	B-1
IC1	P-3	TP1	R-2
IC2	N-3	TP100	A-4
IC3	N-3	TP103	B-4
IC4	K-3	TP201	A-2
IC5	L-1	TP202	A-2
IC6	M-2	TP203	D-1
IC7	R-1	TP205	H-3
IC9	P-5	TP206	G-3
IC10	R-2	TP207	F-4
IC11	P-2	TP211	G-2
IC12	N-2	TP216	H-2
IC13	R-4	TP217	G-3
IC14	R-4	TP219	D-1
IC15	N-2	TP223	H-2
IC100	A-3	TP224	J-2
IC101	A-5	TP225	C-1
IC102	A-5		
IC103	B-5	X1	R-2
IC200	E-3	X101	A-3
IC201	F-4	X200	G-1
IC202	E-2		
IC203	E-3		
IC204	D-4		
IC206	E-3		
IC207	D-3		
IC208	D-3		
IC209	D-3		
IC210	D-3		
IC211	B-2		
IC212	C-2		
IC213	C-3		
IC214	E-3		
IC215	G-3		
IC216	G-3		
IC217	G-3		
IC219	H-1		
IC220	J-3		
IC221	J-4		

✱ : B SIDE

TBC-28/28P ; TIME BASE CORRECTOR, CTDM(EXPAND)

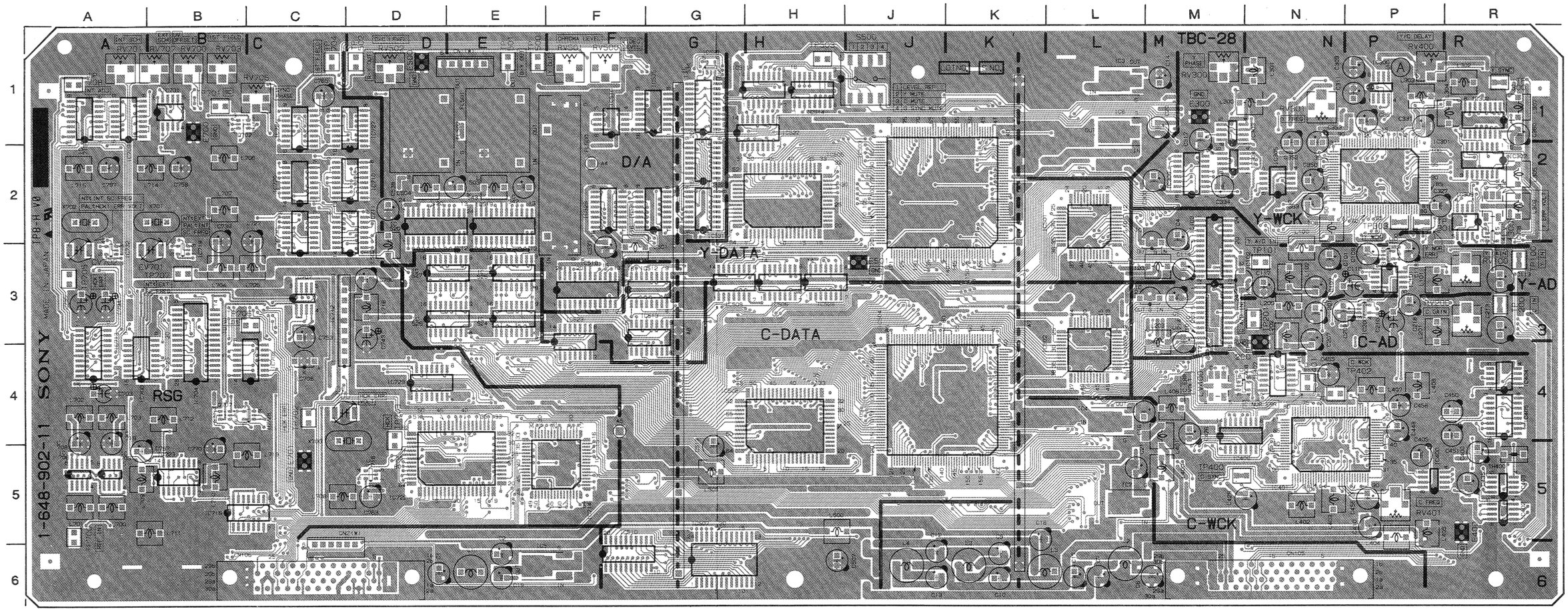

TBC-28 1-648-902-11 A SIDE

UVW-1400 (J) ; Serial No. 10001 through 10420
UVW-1400 (UC) ; Serial No. 10001 through 11050
UVW-1400P(EK) ; Serial No. 10001 through 11490
UVW-1200 (J) ; Serial No. 10001 through 10350
UVW-1200 (UC) ; Serial No. 10001 through 11090
UVW-1200P(EK) ; Serial No. 10001 through 11720

TBC-28/28P(1-648-902-11)

CN1		E-1	IC405		R-4	✱Q300		P-1	TP701		B-1
CN2		C-6	IC406		M-5	✱Q301		P-1	TP702		C-4
CN105		N-6	IC407		N-4	✱Q302		P-1	TP703		D-4
CN106		C-6	IC408		M-4	✱Q303		P-1	TP704		C-1
			IC501		L-2	✱Q304		N-2	TP705		A-3
CV700		C-4	IC502		L-4	✱Q305		N-2	TP706		C-3
CV701		B-3	IC503		J-2	✱Q306		R-2	TP707	N	B-3
CV702		A-3	IC504		J-4	✱Q400		P-5	TP708	N	A-1
			IC505		H-2	✱Q401		P-5			
✱D1		M-2	IC506		H-3	✱Q402		R-5	X700		D-4
✱D2		M-3	IC507		G-6	✱Q403		P-5	X701		B-2
✱D100		M-3	IC508		H-4	✱Q404		M-4	X702		A-2
✱D101		N-3	IC509		G-3	✱Q405		R-4			
✱D102		R-3	IC510		F-6	✱Q406		R-5			
✱D200		M-3	IC511		H-1	✱Q407		N-4			
✱D301		N-2	IC512		F-3	✱Q501		F-1			
✱D302		R-2	IC513		F-4	✱Q502		E-1			
✱D303		R-2	IC514		H-1	✱Q503		D-1			
✱D304		R-2	IC516		F-1	✱Q700		A-5			
✱D305	P	P-2	IC518		F-3	✱Q701		A-5			
✱D401		P-4	IC519		E-2	Q702		B-1			
✱D402		N-4	IC520		D-2	✱Q703		C-2			
✱D403		M-4	IC522		G-2	✱Q704		B-2			
✱D404		M-4	IC523		F-4	✱Q705		B-2			
✱D502		K-2	IC524		E-3	✱Q706		C-2			
✱D503		K-2	IC525		E-3	Q707		B-4			
✱D505		G-1	IC526		D-3	✱Q708		D-5			
✱D506		M-5	IC527		D-3	✱Q709		C-5			
✱D700		C-4	IC528		H-3	✱Q710		B-5			
✱D703		B-2	IC529	N	F-2	✱Q711		B-5			
✱D704		A-2	IC530	N	G-2	✱Q712		B-5			
✱D705		C-2	IC531	N	G-2	✱Q713		B-4			
✱D706		A-1	IC532	N	G-2	✱Q714		B-4			
✱D707	N	A-1	IC533	N	G-1	✱Q715		B-5			
			IC534	N	G-1	✱Q716		B-4			
E200		N-3	IC535	N	G-1	✱Q717		B-2			
E300		M-1	IC700		B-4	✱Q718		B-2			
E400		R-5	IC701		B-1	✱Q719	N	B-2			
E500		D-1	IC703		A-5	✱Q720	N	A-2			
E501		J-3	IC704		B-4	✱Q721		A-2			
E700		B-1	IC705		C-4	✱Q722		A-2			
E701		C-5	IC706		A-5						
			IC707		C-3	RV100		R-3			
FL500		F-2	IC708		C-4	RV200		R-3			
FL501		E-1	IC709		A-1	RV300		M-1			
FL502		D-1	IC710		D-2	RV301		N-1			
			IC711		D-3	RV400		P-1			
IC1		M-2	IC712		C-4	RV401		P-5			
IC2		M-3	IC713		A-4	RV500		F-1			
IC3		L-1	IC714		F-5	RV501		F-1			
IC4		L-4	IC715		A-1	RV502		D-1			
IC5		E-6	IC716		B-5	RV700		B-1			
IC6		L-1	IC718		D-5	RV701		A-1			
IC7		L-5	IC719		B-3	RV703		B-1			
IC8	P	B-5	IC720	P	C-2	RV706		C-1			
IC100		P-3	IC721		C-2	RV707		B-1			
IC101		P-3	IC722		E-5						
IC102		M-3	IC723		B-5	S500		J-1			
IC103		M-2	IC727	N	D-2						
IC200		P-3	IC728		C-4	TH400		R-5			
IC203		M-3	IC729		D-4						
IC300		P-1	IC730		C-3	TP100		R-3			
IC301		P-2	IC732		A-3	TP101		N-3			
IC302		R-1				TP200		R-3			
IC303		M-1	LV300		R-2	TP201		N-3			
IC304		M-2	LV400		M-4	TP300		R-1			
IC305		N-2				TP301		P-2			
IC306		M-2	✱Q100		R-3	TP303		P-2			
IC307		R-2	✱Q101		R-3	TP400		M-5			
IC308		R-2	✱Q102		P-3	TP401		N-4			
IC309	P	R-2	✱Q103		P-3	TP402		N-4			
IC400		R-5	✱Q104		R-3	TP500		E-1			
IC401		N-5	✱Q200		R-3	TP501		E-1			
IC402		R-5	✱Q201		R-3	TP502		D-1			
IC403		R-5	✱Q202		P-3	TP503	N	H-1			
IC404		R-4	✱Q203		P-3	TP700		A-5			

✱ : B SIDE
N : UVW-1400/1200 ONLY
P : UVW-1400P/1200P ONLY

TBC-28/28P ; TIME BASE CORRECTOR, CTDM(EXPAND)

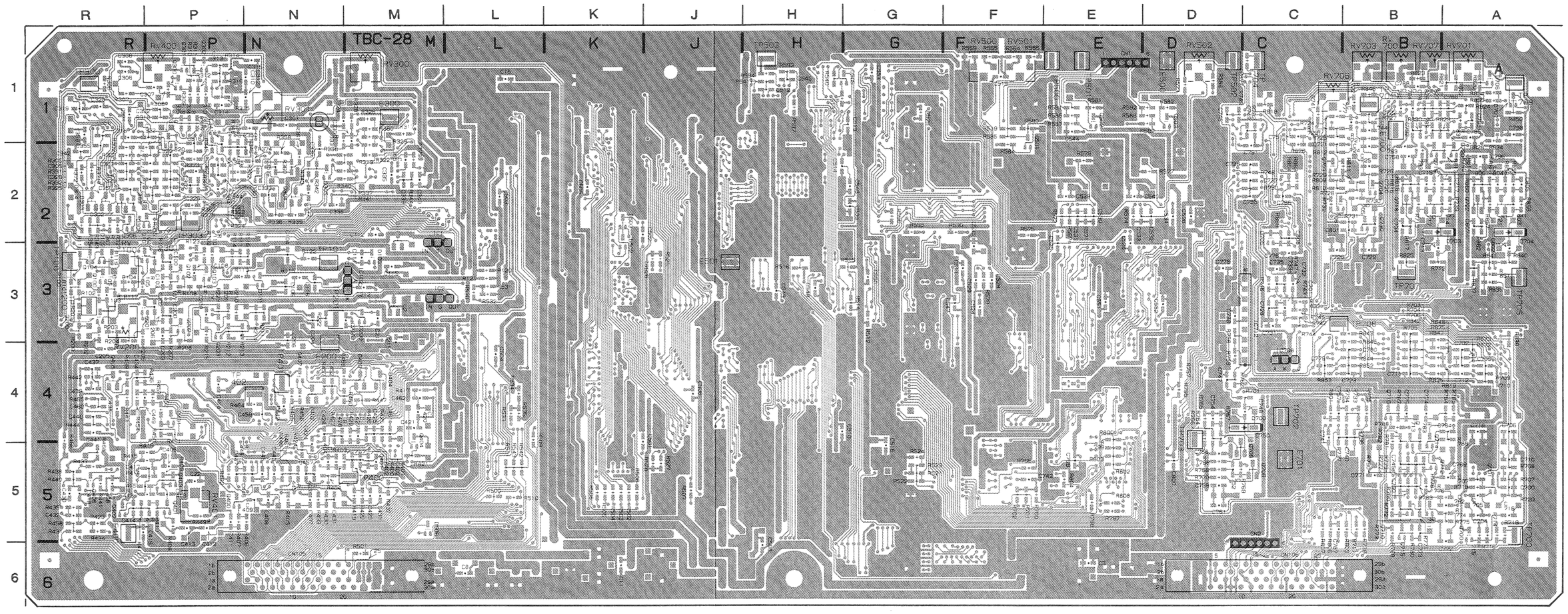

TBC-28 1-648-902-11 B SIDE

TBC-28/28P(1-648-902-11)

	CN1	E-1		IC405	R-4		✱Q300	P-1		TP701	B-1
	CN2	C-6		IC406	M-5		✱Q301	P-1		TP702	C-4
	CN105	N-6		IC407	N-4		✱Q302	P-1		TP703	D-4
	CN106	C-6		IC408	M-4		✱Q303	P-1		TP704	C-1
				IC501	L-2		✱Q304	N-2		TP705	A-3
	CV700	C-4		IC502	L-4		✱Q305	N-2		TP706	C-3
	CV701	B-3		IC503	J-2		✱Q306	R-2		TP707 N	B-3
	CV702	A-3		IC504	J-4		✱Q400	P-5		TP708 N	A-1
				IC505	H-2		✱Q401	P-5			
	✱D1	M-2		IC506	H-3		✱Q402	R-5		X700	D-4
	✱D2	M-3		IC507	G-6		✱Q403	P-5		X701	B-2
	✱D100	M-3		IC508	H-4		✱Q404	M-4		X702	A-2
	✱D101	N-3		IC509	G-3		✱Q405	R-4			
	✱D102	R-3		IC510	F-6		✱Q406	R-5			
	✱D200	M-3		IC511	H-1		✱Q407	N-4			
	✱D301	N-2		IC512	F-3		✱Q501	F-1			
	✱D302	R-2		IC513	F-4		✱Q502	E-1			
	✱D303	R-2		IC514	H-1		✱Q503	D-1			
	✱D304	R-2		IC516	F-1		✱Q700	A-5			
P	✱D305	P-2		IC518	F-3		✱Q701	A-5			
	✱D401	P-4		IC519	E-2		Q702	B-1			
	✱D402	N-4		IC520	D-2		✱Q703	C-2			
	✱D403	M-4		IC522	G-2		✱Q704	B-2			
	✱D404	M-4		IC523	F-4		✱Q705	B-2			
	✱D502	K-2		IC524	E-3		✱Q706	C-2			
	✱D503	K-2		IC525	E-3		Q707	B-4			
	✱D505	G-1		IC526	D-3		✱Q708	D-5			
	✱D506	M-5		IC527	D-3		✱Q709	C-5			
	✱D700	C-4		IC528	H-3		✱Q710	B-5			
	✱D703	B-2		IC529	N F-2		✱Q711	B-5			
	✱D704	A-2		IC530	N G-2		✱Q712	B-5			
	✱D705	C-2		IC531	N G-2		✱Q713	B-4			
	✱D706	A-1		IC532	N G-2		✱Q714	B-4			
N	✱D707	A-1		IC533	N G-1		✱Q715	B-5			
				IC534	N G-1		✱Q716	B-4			
	E200	N-3		IC535	N G-1		✱Q717	B-2			
	E300	M-1		IC700	B-4		✱Q718	B-2			
	E400	R-5		IC701	B-1		✱Q719	N B-2			
	E500	D-1		IC703	A-5		✱Q720	N A-2			
	E501	J-3		IC704	B-4		✱Q721	A-2			
	E700	B-1		IC705	C-4		✱Q722	A-2			
	E701	C-5		IC706	A-5						
				IC707	C-3		RV100	R-3			
	FL500	F-2		IC708	C-4		RV200	R-3			
	FL501	E-1		IC709	A-1		RV300	M-1			
	FL502	D-1		IC710	D-2		RV301	N-1			
				IC711	D-3		RV400	P-1			
	IC1	M-2		IC712	C-4		RV401	P-5			
	IC2	M-3		IC713	A-4		RV500	F-1			
	IC3	L-1		IC714	F-5		RV501	F-1			
	IC4	L-4		IC715	A-1		RV502	D-1			
	IC5	E-6		IC716	B-5		RV700	B-1			
	IC6	L-1		IC718	D-5		RV701	A-1			
	IC7	L-5		IC719	B-3		RV703	B-1			
P	IC8	B-5		IC720	P C-2		RV706	C-1			
	IC100	P-3		IC721	C-2		RV707	B-1			
	IC101	P-3		IC722	E-5						
	IC102	M-3		IC723	B-5		S500	J-1			
	IC103	M-2		IC727	N D-2						
	IC200	P-3		IC728	C-4		TH400	R-5			
	IC203	M-3		IC729	D-4						
	IC300	P-1		IC730	C-3		TP100	R-3			
	IC301	P-2		IC732	A-3		TP101	N-3			
	IC302	R-1					TP200	R-3			
	IC303	M-1		LV300	R-2		TP201	N-3			
	IC304	M-2		LV400	M-4		TP300	R-1			
	IC305	N-2					TP301	P-2			
	IC306	M-2		✱Q100	R-3		TP303	P-2			
	IC307	R-2		✱Q101	R-3		TP400	M-5			
	IC308	R-2		✱Q102	P-3		TP401	N-4			
P	IC309	R-2		✱Q103	P-3		TP402	N-4			
	IC400	R-5		✱Q104	R-3		TP500	E-1			
	IC401	N-5		✱Q200	R-3		TP501	E-1			
	IC402	R-5		✱Q201	R-3		TP502	D-1			
	IC403	R-5		✱Q202	P-3		TP503 N	H-1			
	IC404	R-4		✱Q203	P-3		TP700	A-5			

✱ : B SIDE
N : UVW-1400/1200 ONLY
P : UVW-1400P/1200P ONLY

TBC-28/28P ; TIME BASE CORRECTOR, CTDM (EXPAND)

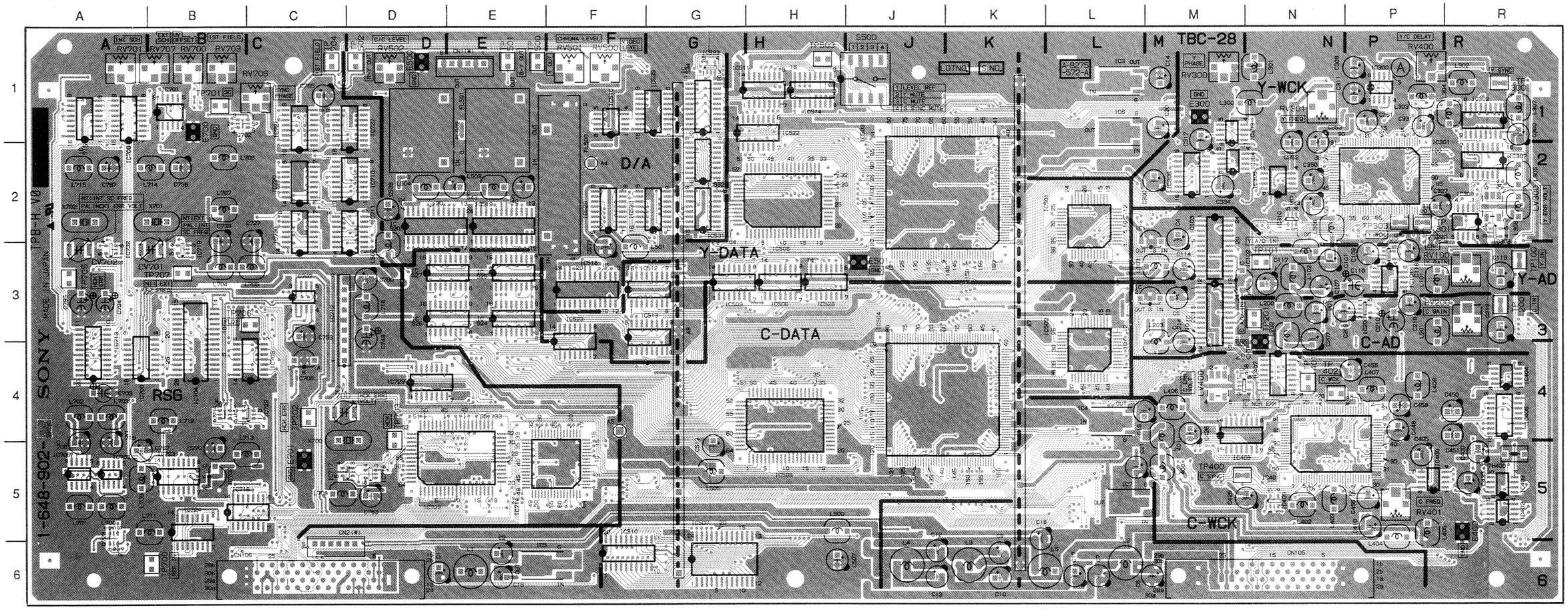

TBC-28 1-648-902-12,13 A SIDE

UVW-1400 (J) ; Serial No. 10421 and higher
UVW-1400 (UC) ; Serial No. 11051 and higher
UVW-1400P(EK) ; Serial No. 11491 and higher
UVW-1200 (J) ; Serial No. 10351 and higher
UVW-1200 (UC) ; Serial No. 11091 and higher
UVW-1200P(EK) ; Serial No. 11721 and higher

TBC-28/28P (1-648-902-12,13)

	CN1		E-1		IC405		R-4		✱Q300		P-1
	CN2		C-6		IC406		M-5		✱Q301		P-1
	CN105		N-6		IC407		N-4		✱Q302		P-1
	CN106		C-6		IC408		M-4		✱Q303		P-1
					IC501		L-2		✱Q304		N-2
	CV700		C-4		IC502		L-4		✱Q305		N-2
	CV701		B-3		IC503		J-2		✱Q306		R-2
	CV702		A-3		IC504		J-4		✱Q400		P-5
					IC505		H-2		✱Q401		P-5
	✱D1		M-2		IC506		H-3		✱Q402		R-5
	✱D2		M-3		IC507		G-6		✱Q403		P-5
	✱D100		M-3		IC508		H-4		✱Q404		M-4
	✱D101		N-3		IC509		G-3		✱Q405		R-4
	✱D102		R-3		IC510		F-6		✱Q406		R-5
	✱D200		M-3		IC511		H-1		✱Q407		N-4
	✱D301		N-2		IC512		F-3		✱Q501		F-1
	✱D302		R-2		IC513		F-4		✱Q502		E-1
	✱D303		R-2		IC514		H-1		✱Q503		D-1
	✱D304		R-2		IC516		F-1		✱Q700		A-5
	✱D305	P	P-2		IC518		F-3		✱Q701		A-5
	✱D401		P-4		IC519		E-2		Q702		B-1
	✱D402		N-4		IC520		D-2		✱Q703		C-2
	✱D403		M-4		IC522		G-2		✱Q704		B-2
	✱D404		M-4		IC523		F-4		✱Q705		B-2
	✱D502		K-2		IC524		E-3		✱Q706		C-2
	✱D503		K-2		IC525		E-3		Q707		B-4
	✱D505		G-1		IC526		D-3		✱Q708		D-5
	✱D506		M-5		IC527		D-3		✱Q709		C-5
	✱D700		C-4		IC528		H-3		✱Q710		B-5
	✱D703		B-2		IC529	N	F-2		✱Q711		B-5
	✱D704		A-2		IC530	N	G-2		✱Q712		B-5
	✱D705		C-2		IC531	N	G-2		✱Q713		B-4
	✱D706		A-1		IC532	N	G-2		✱Q714		B-4
	✱D707	N	A-1		IC533	N	G-1		✱Q715		B-5
					IC534	N	G-1		✱Q716		B-4
	E200		N-3		IC535	N	G-1		✱Q717		B-2
	E300		M-1		IC700		B-4		✱Q718		B-2
	E400		R-5		IC701		B-1		✱Q719	N	B-2
	E500		D-1		IC703		A-5		✱Q720	N	A-2
	E501		J-3		IC704		B-4		✱Q721		A-2
	E700		B-1		IC705		C-4		✱Q722		A-2
	E701		C-5		IC706		A-5				
					IC707		C-3		RV100		R-3
	FL500		F-2		IC708		C-4		RV200		R-3
	FL501		E-1		IC709		A-1		RV300		M-1
	FL502		D-1		IC710		D-2		RV301		N-1
					IC711		D-3		RV400		P-1
	IC1		M-2		IC712		C-4		RV401		P-5
	IC2		M-3		IC713		A-4		RV500		F-1
	IC3		L-1		IC714		F-5		RV501		F-1
	IC4		L-4		IC715		A-1		RV502		D-1
	IC5		E-6		IC716		B-5		RV700		B-1
	IC6		L-1		IC718		D-5		RV701		A-1
	IC7		L-5		IC719		B-3		RV703		B-1
	IC8	P	B-5		IC720	P	C-2		RV706		C-1
	IC100		P-3		IC721		C-2		RV707		B-1
	IC101		P-3		IC722		E-5				
	IC102		M-3		IC723		B-5		S500		J-1
	IC103		M-2		IC727	N	D-2				
	IC200		P-3		IC728		C-4		TH400		R-5
	IC203		M-3		IC729		D-4				
	IC300		P-1		IC730		C-3		TP100		R-3
	IC301		P-2		IC732		A-3		TP101		N-3
	IC302		R-1						TP200		R-3
	IC303		M-1		LV300		R-2		TP201		N-3
	IC304		M-2		LV400		M-4		TP300		R-1
	IC305		N-2						TP301		P-2
	IC306		M-2		✱Q100		R-3		TP303		P-2
	IC307		R-2		✱Q101		R-3		TP400		M-5
	IC308		R-2		✱Q102		P-3		TP401		N-4
	IC309	P	R-2		✱Q103		P-3		TP402		N-4
	IC400		R-5		✱Q104		R-3		TP500		E-1
	IC401		N-5		✱Q200		R-3		TP501		E-1
	IC402		R-5		✱Q201		R-3		TP502		D-1
	IC403		R-5		✱Q202		P-3		TP503	N	H-1
	IC404		R-4		✱Q203		P-3		TP700		A-5

	TP701		B-1								
	TP702		C-4								
	TP703		D-4								
	TP704		C-1								
	TP705		A-3								
	TP706		C-3								
	TP707	N	B-3								
	TP708	N	A-1								
	X700		D-4								
	X701		B-2								
	X702		A-2								

✱ : B SIDE
N : UVW-1400/1200 ONLY
P : UVW-1400P/1200P ONLY

TBC-28/28P ; TIME BASE CORRECTOR, CTDM(EXPAND)

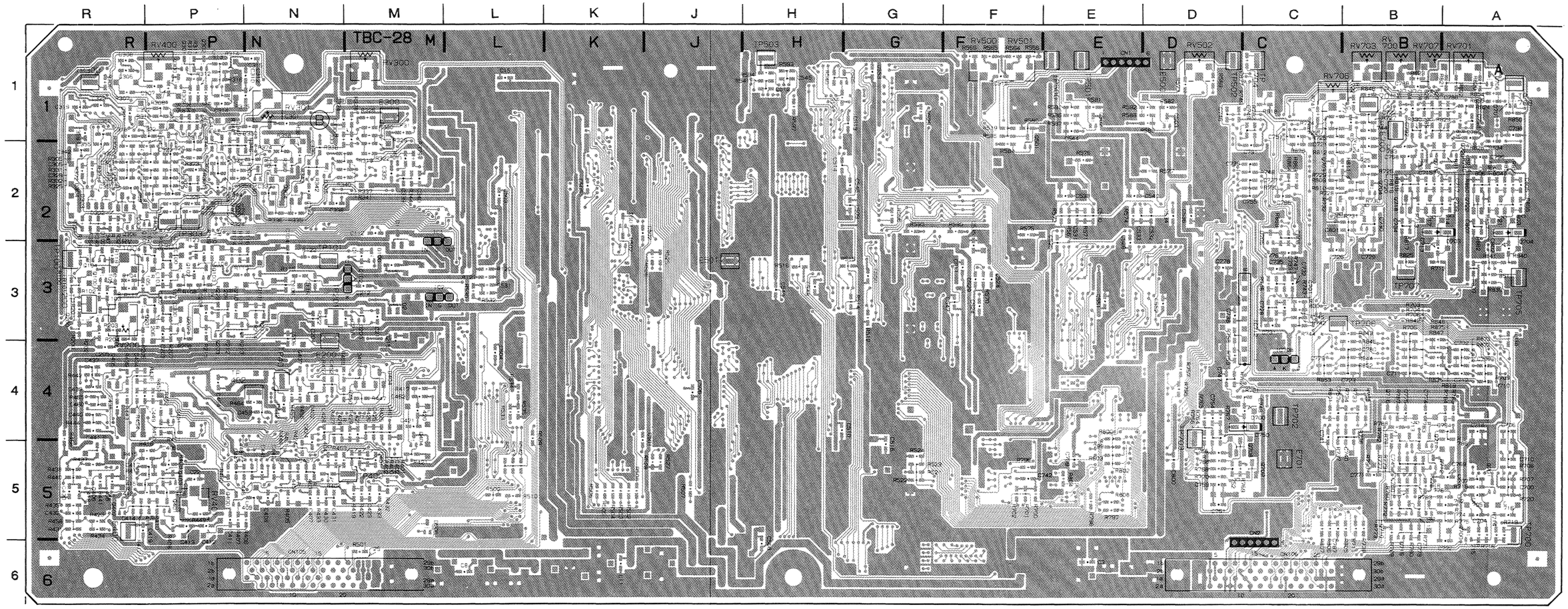

TBC-28 1-648-902-12,13 B SIDE

UVW-1400 (J) ; Serial No. 10421 and higher
UVW-1400 (UC) ; Serial No. 11051 and higher
UVW-1400P(EK) ; Serial No. 11491 and higher
UVW-1200 (J) ; Serial No. 10351 and higher
UVW-1200 (UC) ; Serial No. 11091 and higher
UVW-1200P(EK) ; Serial No. 11721 and higher

TBC-28/28P (1-648-902-12,13)

	CN1		E-1		IC405		R-4		✱Q300		P-1
	CN2		C-6		IC406		M-5		✱Q301		P-1
	CN105		N-6		IC407		N-4		✱Q302		P-1
	CN106		C-6		IC408		M-4		✱Q303		P-1
					IC501		L-2		✱Q304		N-2
	CV700		C-4		IC502		L-4		✱Q305		N-2
	CV701		B-3		IC503		J-2		✱Q306		R-2
	CV702		A-3		IC504		J-4		✱Q400		P-5
					IC505		H-2		✱Q401		P-5
	✱D1		M-2		IC506		H-3		✱Q402		R-5
	✱D2		M-3		IC507		G-6		✱Q403		P-5
	✱D100		M-3		IC508		H-4		✱Q404		M-4
	✱D101		N-3		IC509		G-3		✱Q405		R-4
	✱D102		R-3		IC510		F-6		✱Q406		R-5
	✱D200		M-3		IC511		H-1		✱Q407		N-4
	✱D301		N-2		IC512		F-3		✱Q501		F-1
	✱D302		R-2		IC513		F-4		✱Q502		E-1
	✱D303		R-2		IC514		H-1		✱Q503		D-1
	✱D304		R-2		IC516		F-1		✱Q700		A-5
	✱D305	P	P-2		IC518		F-3		✱Q701		A-5
	✱D401		P-4		IC519		E-2		Q702		B-1
	✱D402		N-4		IC520		D-2		✱Q703		C-2
	✱D403		M-4		IC522		G-2		✱Q704		B-2
	✱D404		M-4		IC523		F-4		✱Q705		B-2
	✱D502		K-2		IC524		E-3		✱Q706		C-2
	✱D503		K-2		IC525		E-3		Q707		B-4
	✱D505		G-1		IC526		D-3		✱Q708		D-5
	✱D506		M-5		IC527		D-3		✱Q709		C-5
	✱D700		C-4		IC528		H-3		✱Q710		B-5
	✱D703		B-2		IC529	N	F-2		✱Q711		B-5
	✱D704		A-2		IC530	N	G-2		✱Q712		B-5
	✱D705		C-2		IC531	N	G-2		✱Q713		B-4
	✱D706		A-1		IC532	N	G-2		✱Q714		B-4
	✱D707	N	A-1		IC533	N	G-1		✱Q715		B-5
					IC534	N	G-1		✱Q716		B-4
	E200		N-3		IC535	N	G-1		✱Q717		B-2
	E300		M-1		IC700		B-4		✱Q718		B-2
	E400		R-5		IC701		B-1		✱Q719	N	B-2
	E500		D-1		IC703		A-5		✱Q720	N	A-2
	E501		J-3		IC704		B-4		✱Q721		A-2
	E700		B-1		IC705		C-4		✱Q722		A-2
	E701		C-5		IC706		A-5				
					IC707		C-3		RV100		R-3
	FL500		F-2		IC708		C-4		RV200		R-3
	FL501		E-1		IC709		A-1		RV300		M-1
	FL502		D-1		IC710		D-2		RV301		N-1
					IC711		D-3		RV400		P-1
	IC1		M-2		IC712		C-4		RV401		P-5
	IC2		M-3		IC713		A-4		RV500		F-1
	IC3		L-1		IC714		F-5		RV501		F-1
	IC4		L-4		IC715		A-1		RV502		D-1
	IC5		E-6		IC716		B-5		RV700		B-1
	IC6		L-1		IC718		D-5		RV701		A-1
	IC7		L-5		IC719		B-3		RV703		B-1
	IC8	P	B-5		IC720	P	C-2		RV706		C-1
	IC100		P-3		IC721		C-2		RV707		B-1
	IC101		P-3		IC722		E-5				
	IC102		M-3		IC723		B-5		S500		J-1
	IC103		M-2		IC727	N	D-2				
	IC200		P-3		IC728		C-4		TH400		R-5
	IC203		M-3		IC729		D-4				
	IC300		P-1		IC730		C-3		TP100		R-3
	IC301		P-2		IC732		A-3		TP101		N-3
	IC302		R-1						TP200		R-3
	IC303		M-1		LV300		R-2		TP201		N-3
	IC304		M-2		LV400		M-4		TP300		R-1
	IC305		N-2						TP301		P-2
	IC306		M-2		✱Q100		R-3		TP303		P-2
	IC307		R-2		✱Q101		R-3		TP400		M-5
	IC308		R-2		✱Q102		P-3		TP401		N-4
	IC309	P	R-2		✱Q103		P-3		TP402		N-4
	IC400		R-5		✱Q104		R-3		TP500		E-1
	IC401		N-5		✱Q200		R-3		TP501		E-1
	IC402		R-5		✱Q201		R-3		TP502		D-1
	IC403		R-5		✱Q202		P-3		TP503	N	H-1
	IC404		R-4		✱Q203		P-3		TP700		A-5

	TP701		B-1								
	TP702		C-4								
	TP703		D-4								
	TP704		C-1								
	TP705		A-3								
	TP706		C-3								
	TP707	N	B-3								
	TP708	N	A-1								
	X700		D-4								
	X701		B-2								
	X702		A-2								

✱ : B SIDE
N : UVW-1400/1200 ONLY
P : UVW-1400P/1200P ONLY

VP-44/44A/44P/44AP ; Y/C PB PROCESS(PB RF EQ, DEMOD., Y-RF ENVELOPE DET), VIDEO OUTPUT DRIVER, ENCODE, SYNC/CHARA MIX

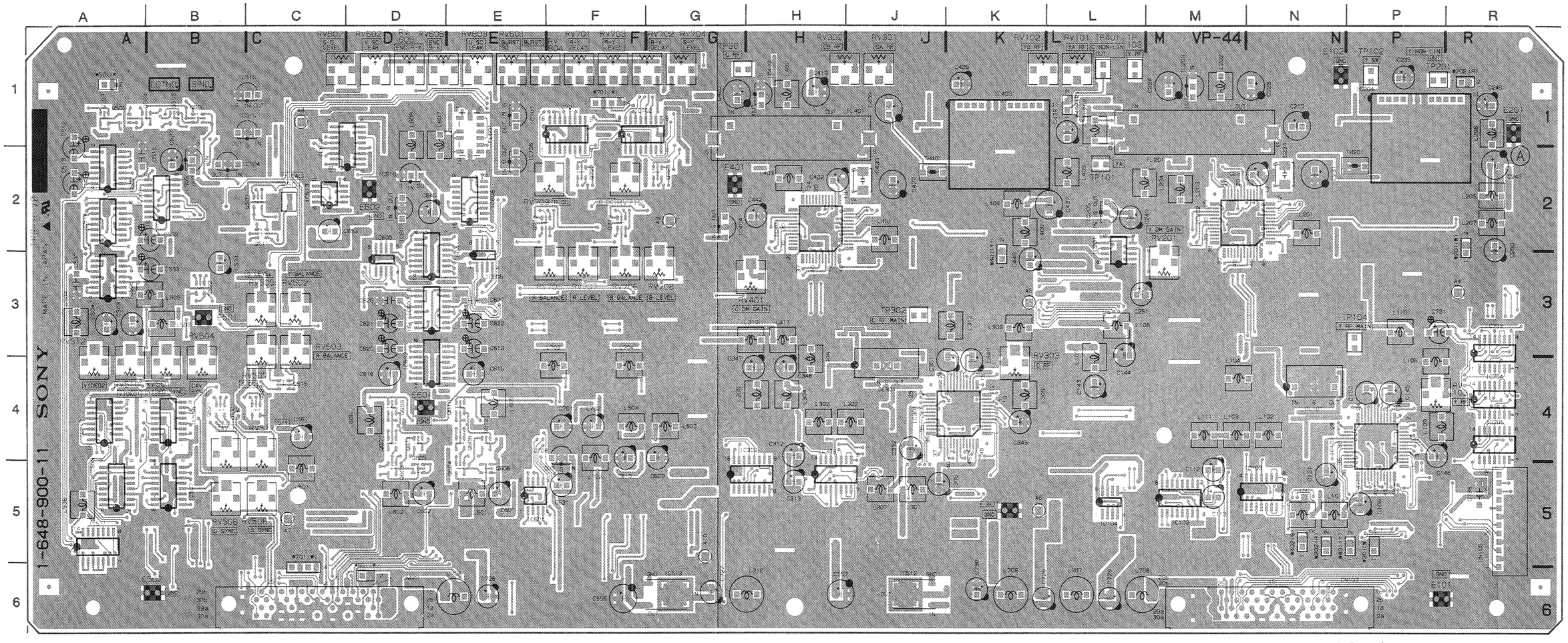

VP-44/44A 1-648-900-11 A SIDE

UVW-1400 (J)	; Serial No. 10001 through 10420
UVW-1400 (UC)	; Serial No. 10001 through 11050
UVW-1400P(EK)	; Serial No. 10001 through 11490
UVW-1200 (J)	; Serial No. 10001 through 10350
UVW-1200 (UC)	; Serial No. 10001 through 11090
UVW-1200P(EK)	; Serial No. 10001 through 11720

VP-44/44A/44P/44AP(1-648-900-11)

CN103	N-6	IC706	E-2	✱Q512	C-2	RV505	C-3		
CN105	R-5	IC707	E-1	✱Q513	B-5	RV506	B-5		
CN601	C-6	IC708	F-5	✱Q514	C-2	RV507	C-3		
				Q515	C-4	RV508	C-5		
DL101	N-4	✱Q101	N-5	✱Q516	B-2	RV509	B-4		
DL301	J-4	✱Q102	N-4	✱Q517	C-5	RV510	A-4		
		✱Q103	N-5	✱Q518	C-4	RV511	C-4		
✱D201	N-2	✱Q104	N-4	✱Q519	B-2	RV512	A-4		
✱D401	J-2	✱Q105	N-4	✱Q520	B-2	RV601	P E-1		
✱D501	A-2	✱Q106	N-3	Q521	B-4	RV602	D-1		
✱D502	B-2	✱Q107	N-3	Q522	B-3	RV603	E-1		
✱D503	B-3	✱Q108	N-4	Q523	C-4	RV604	E-1		
✱D504	A-4	✱Q109	N-4	✱Q601	D-5	RV605	D-1		
✱D601	D-2	✱Q110	P-4	✱Q602	E-5	RV606	D-1		
✱D701	R-4	✱Q111	P-5	Q603	D-5	RV607	C-1		
		✱Q112	P-5	Q604	E-5	RV701	F-1		
E101	P-6	✱Q201	M-2	Q605	D-5	RV702	G-1		
E102	N-1	✱Q202	N-1	Q606	E-5	RV703	F-1		
E201	R-1	✱Q203	P-2	Q607	D-4	RV704	G-1		
E301	K-5	✱Q204	N-2	Q608	E-4	RV705	F-3		
E401	G-2	✱Q205	P-2	Q609	D-4	RV706	F-3		
E501	B-3	✱Q206	P-2	Q610	E-4	RV707	F-3		
E502	B-6	✱Q207	N-2	Q611	D-4	RV708	G-3		
E601	D-4	✱Q208	N-1	Q612	E-4	RV709	F-2		
E602	D-2	✱Q209	N-1	✱Q613	F-5	RV710	F-2		
		✱Q210	N-1	✱Q614	P F-5				
FL201	M-1	✱Q211	P-2	✱Q615	F-5	TH201	P-2		
FL401	H-1	✱Q212	P-1	✱Q616	D-2	TH401	J-2		
FL601	E-1	✱Q213	R-2	✱Q617	D-2	✱TH601	P D-1		
		✱Q214	R-2	✱Q618	D-3				
IC101	P-4	✱Q215	P-1	✱Q619	E-3	TP101	L-2		
IC102	M-5	✱Q216	N-2	✱Q620	F-5	TP102	P-1		
IC103	N-5	✱Q217	M-2	✱Q621	F-5	TP103	L-1		
IC104	L-5	✱Q218	M-2	✱Q622	D-1	TP104	P-3		
IC202	M-2	✱Q219	M-2	✱Q623	D-1	TP201	P-1		
IC203	M-1	✱Q220	M-2	✱Q624	D-1	TP301	G-1		
IC204	P-1	✱Q301	J-4	✱Q701	F-4	TP302	J-3		
IC205	L-2	✱Q302	J-4	✱Q702	G-4	TP401	L-1		
IC301	K-4	✱Q303	H-4	✱Q703	F-3	TP501	C-2		
IC302	H-5	✱Q304	H-5	✱Q704	G-3				
IC303	H-5	✱Q305	H-4	✱Q705	F-3				
IC401	H-2	✱Q306	H-3	✱Q706	F-3				
IC402	H-1	✱Q307	J-3	✱Q707	F-3				
IC403	K-1	✱Q308	J-4	✱Q708	F-3				
IC404	G-2	✱Q309	J-4	✱Q709	F-3				
IC501	B-2	✱Q310	K-3	✱Q710	F-3				
IC502	A-2	✱Q311	K-5	✱Q711	G-3				
IC504	B-2	✱Q401	H-2	✱Q712	G-3				
IC505	B-2	✱Q402	J-1	✱Q713	F-3				
IC506	A-3	✱Q403	J-1	✱Q714	G-3				
IC507	B-5	✱Q404	J-2	✱Q715	F-3				
IC508	B-4	✱Q405	J-1	✱Q716	F-3				
IC509	A-5	✱Q406	J-1	✱Q717	F-2				
IC510	A-4	✱Q407	J-1	Q718	E-2				
IC511	A-5	✱Q408	J-1	Q719	F-2				
IC512	J-6	✱Q409	J-2	✱Q720	F-2				
IC513	G-6	✱Q410	J-1	✱Q721	F-2				
IC514	A-2	✱Q411	J-2	Q722	F-2				
IC515 N	C-1	✱Q412	J-2	Q723	G-2				
IC516	C-1	✱Q413	K-2	✱Q724	F-2				
IC601	E-5	✱Q414	K-2	✱Q725	F-2				
IC602	D-4	✱Q415	K-2	✱Q726	F-1				
IC603	D-3	✱Q416	J-2	✱Q727	F-1				
IC604	D-3	✱Q417	H-2						
IC605	D-3	✱Q418	H-2	RV101	L-1				
IC606	E-3	✱Q501	A-1	RV102	K-1				
IC607	D-2	Q502	A-1	RV103	P-4				
IC608	E-2	Q503	A-1	RV201	M-3				
IC610	D-2	Q504	A-1	RV301	J-1				
IC612	D-2	Q505	B-1	RV302	H-1				
IC613	C-2	Q506	B-1	RV303	K-4				
IC701	F-1	Q507	C-2	RV401	H-3				
IC702	F-1	✱Q508	B-4	RV501	B-4				
IC703	R-3	✱Q509	C-3	RV502	C-3				
IC704	R-4	✱Q510	B-4	RV503	C-3				
IC705	R-4	Q511	C-2	RV504	B-4				

✱ : B SIDE
__ : UVW-1400/1400P ONLY
N : UVW-1400/1200 ONLY
P : UVW-1400P/1200P ONLY

VP-44/44A/44P/44AP ; Y/C PB PROCESS(PB RF EQ, DEMOD., Y-RF ENVELOPE DET), VIDEO OUTPUT DRIVER, ENCODE, SYNC/CHARA MIX

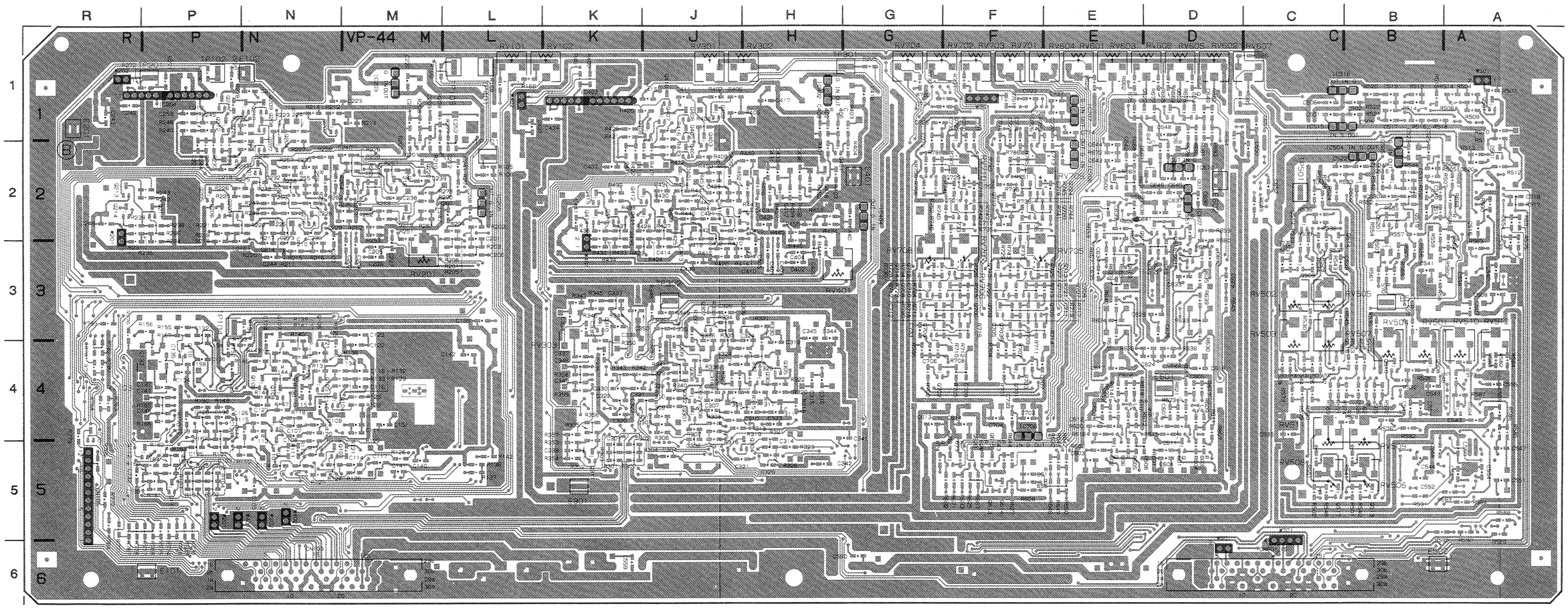

VP-44/44A 1-648-900-11 B SIDE

UVW-1400 (J)	; Serial No. 10001 through 10420
UVW-1400 (UC)	; Serial No. 10001 through 11050
UVW-1400P(EK)	; Serial No. 10001 through 11490
UVW-1200 (J)	; Serial No. 10001 through 10350
UVW-1200 (UC)	; Serial No. 10001 through 11090
UVW-1200P(EK)	; Serial No. 10001 through 11720

VP-44/44A/44P/44AP(1-648-900-11)

CN103	N-6	IC706	E-2	✱Q512	C-2		RV505	C-3
CN105	R-5	IC707	E-1	✱Q513	B-5		RV506	B-5
CN601	C-6	IC708	F-5	✱Q514	C-2		RV507	C-3
				Q515	C-4		RV508	C-5
DL101	N-4	✱Q101	N-5	✱Q516	B-2		RV509	B-4
DL301	J-4	✱Q102	N-4	✱Q517	C-5		RV510	A-4
		✱Q103	N-5	✱Q518	C-4		RV511	C-4
✱D201	N-2	✱Q104	N-4	✱Q519	B-2		RV512	A-4
✱D401	J-2	✱Q105	N-4	✱Q520	B-2		RV601	P E-1
✱D501	A-2	✱Q106	N-3	Q521	B-4		RV602	D-1
✱D502	B-2	✱Q107	N-3	Q522	B-3		RV603	E-1
✱D503	B-3	✱Q108	N-4	Q523	C-4		RV604	E-1
✱D504	A-4	✱Q109	N-4	✱Q601	D-5		RV605	D-1
✱D601	D-2	✱Q110	P-4	✱Q602	E-5		RV606	D-1
✱D701	R-4	✱Q111	P-5	Q603	D-5		RV607	C-1
		✱Q112	P-5	Q604	E-5		RV701	F-1
E101	P-6	✱Q201	M-2	Q605	D-5		RV702	G-1
E102	N-1	✱Q202	N-1	Q606	E-5		RV703	F-1
E201	R-1	✱Q203	P-2	Q607	D-4		RV704	G-1
E301	K-5	✱Q204	N-2	Q608	E-4		RV705	F-3
E401	G-2	✱Q205	P-2	Q609	D-4		RV706	F-3
E501	B-3	✱Q206	P-2	Q610	E-4		RV707	F-3
E502	B-6	✱Q207	N-2	Q611	D-4		RV708	G-3
E601	D-4	✱Q208	N-1	Q612	E-4		RV709	F-2
E602	D-2	✱Q209	N-1	✱Q613	F-5		RV710	F-2
		✱Q210	N-1	✱Q614	P F-5			
FL201	M-1	✱Q211	P-2	✱Q615	F-5		TH201	P-2
FL401	H-1	✱Q212	P-1	✱Q616	D-2		TH401	J-2
FL601	E-1	✱Q213	R-2	✱Q617	D-2		✱TH601	P D-1
		✱Q214	R-2	✱Q618	D-3			
IC101	P-4	✱Q215	P-1	✱Q619	E-3		TP101	L-2
IC102	M-5	✱Q216	N-2	✱Q620	F-5		TP102	P-1
IC103	N-5	✱Q217	M-2	✱Q621	F-5		TP103	L-1
IC104	L-5	✱Q218	M-2	✱Q622	D-1		TP104	P-3
IC202	M-2	✱Q219	M-2	✱Q623	D-1		TP201	P-1
IC203	M-1	✱Q220	M-2	✱Q624	D-1		TP301	G-1
IC204	P-1	✱Q301	J-4	✱Q701	F-4		TP302	J-3
IC205	L-2	✱Q302	J-4	✱Q702	G-4		TP401	L-1
IC301	K-4	✱Q303	H-4	✱Q703	F-3		TP501	C-2
IC302	H-5	✱Q304	H-5	✱Q704	G-3			
IC303	H-5	✱Q305	H-4	✱Q705	F-3			
IC401	H-2	✱Q306	H-3	✱Q706	F-3			
IC402	H-1	✱Q307	J-3	✱Q707	F-3			
IC403	K-1	✱Q308	J-4	✱Q708	F-3			
IC404	G-2	✱Q309	J-4	✱Q709	F-3			
IC501	B-2	✱Q310	K-3	✱Q710	F-3			
IC502	A-2	✱Q311	K-5	✱Q711	G-3			
IC504	B-2	✱Q401	H-2	✱Q712	G-3			
IC505	B-2	✱Q402	J-1	✱Q713	F-3			
IC506	A-3	✱Q403	J-1	✱Q714	G-3			
IC507	B-5	✱Q404	J-2	✱Q715	F-3			
IC508	B-4	✱Q405	J-1	✱Q716	F-3			
IC509	A-5	✱Q406	J-1	✱Q717	F-2			
IC510	A-4	✱Q407	J-1	Q718	E-2			
IC511	A-5	✱Q408	J-1	Q719	F-2			
IC512	J-6	✱Q409	J-2	✱Q720	F-2			
IC513	G-6	✱Q410	J-1	✱Q721	F-2			
IC514	A-2	✱Q411	J-2	Q722	F-2			
IC515	N C-1	✱Q412	J-2	Q723	G-2			
IC516	C-1	✱Q413	K-2	✱Q724	F-2			
IC601	E-5	✱Q414	K-2	✱Q725	F-2			
IC602	D-4	✱Q415	K-2	✱Q726	F-1			
IC603	D-3	✱Q416	J-2	✱Q727	F-1			
IC604	D-3	✱Q417	H-2					
IC605	D-3	✱Q418	H-2	RV101	L-1			
IC606	E-3	✱Q501	A-1	RV102	K-1			
IC607	D-2	Q502	A-1	RV103	P-4			
IC608	E-2	Q503	A-1	RV201	M-3			
IC610	D-2	Q504	A-1	RV301	J-1			
IC612	D-2	Q505	B-1	RV302	H-1			
IC613	C-2	Q506	B-1	RV303	K-4			
IC701	F-1	Q507	C-2	RV401	H-3			
IC702	F-1	✱Q508	B-4	RV501	B-4			
IC703	R-3	✱Q509	C-3	RV502	C-3			
IC704	R-4	✱Q510	B-4	RV503	C-3			
IC705	R-4	Q511	C-2	RV504	B-4			

✱ : B SIDE
__ : UVW-1400/1400P ONLY
N : UVW-1400/1200 ONLY
P : UVW-1400P/1200P ONLY

VP-44/44A/44P/44AP ; Y/C PB PROCESS (PB RF EQ, DEMOD., Y-RF ENVELOPE DET), VIDEO OUTPUT DRIVER, ENCODE, SYNC/CHARA MIX

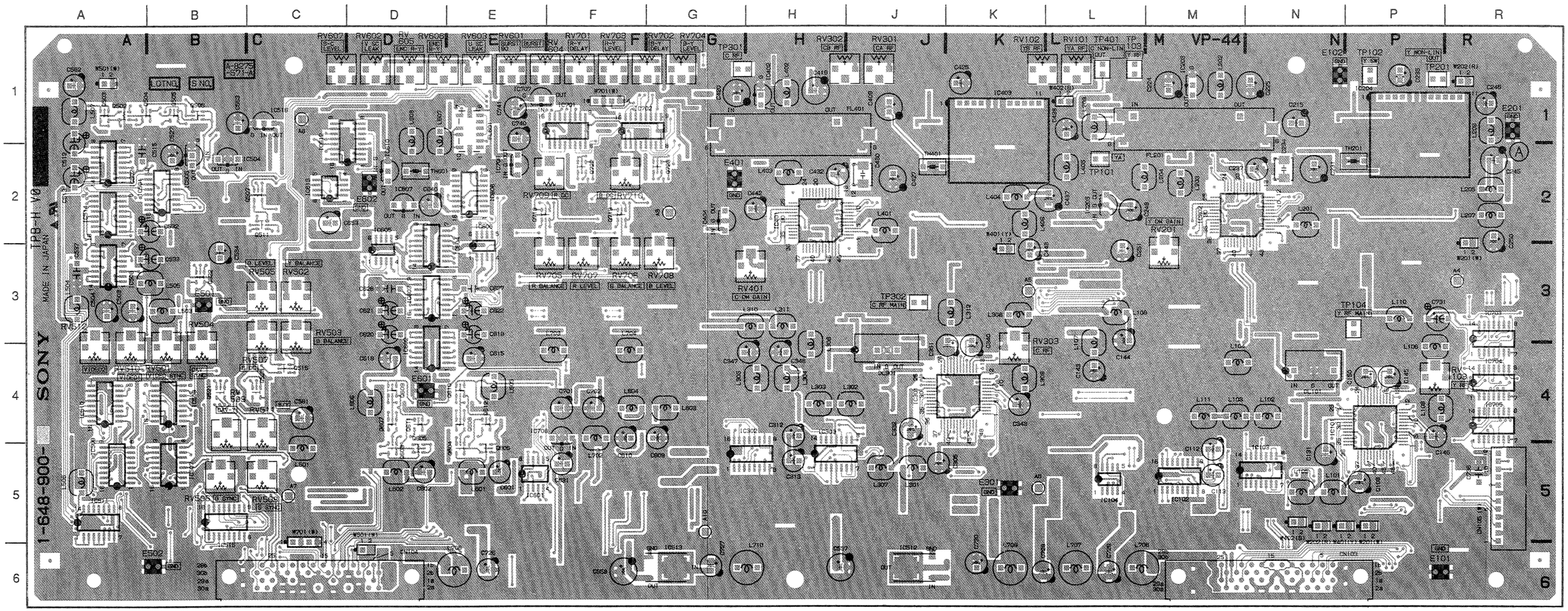
A-8275-571-A
LOT NO.
S NO.
TPB-H V0
MADE IN JAPAN
SONY
1-648-900-
VP-44
RV502 R-Y LEVEL
RV602 V SC LEAK
RV606 EHC R-Y
RV603 U SC LEAK
RV601 BURST
RV604 BURST
RV701 R-Y DELAY
RV703 R-Y LEVEL
RV702 B-Y DELAY
RV704 B-Y LEVEL
RV505 Y BALANCE
RV502 G LEVEL
RV503 B BALANCE
RV507 G SYNC
RV506 B SYNC
RV509 R SYNC
RV705 R BALANCE
RV707 R LEVEL
RV708 B BALANCE
RV708 B LEVEL
RV401 C DM GAIN
RV302 CB RF
RV301 CA RF
RV102 YB RF
RV101 YA RF
TP401 C NOM-LTN
TP103 Y RF
RV303 C RF
RV201 Y DM GAIN
TP302 C RF MAIN
TP104 Y RF MAIN
TP301 C RF
TP101 YA
TP102 Y SW
TP201 Y NON-LTN OUT
RV104 Y RF
RV105 C RF
RV106 YA RF
RV107 YB RF
RV108 C NOM-LTN
RV109 Y RF
RV110 Y DM GAIN
RV111 C DM GAIN
RV112 C RF MAIN
RV113 Y RF MAIN
RV114 Y NON-LTN OUT
RV115 Y SW
RV116 C RF
RV117 YA RF
RV118 YB RF
RV119 C NOM-LTN
RV120 Y RF
RV121 Y DM GAIN
RV122 C DM GAIN
RV123 C RF MAIN
RV124 Y RF MAIN
RV125 Y NON-LTN OUT
RV126 Y SW
RV127 C RF
RV128 YA RF
RV129 YB RF
RV130 C NOM-LTN
RV131 Y RF
RV132 Y DM GAIN
RV133 C DM GAIN
RV134 C RF MAIN
RV135 Y RF MAIN
RV136 Y NON-LTN OUT
RV137 Y SW
RV138 C RF
RV139 YA RF
RV140 YB RF
RV141 C NOM-LTN
RV142 Y RF
RV143 Y DM GAIN
RV144 C DM GAIN
RV145 C RF MAIN
RV146 Y RF MAIN
RV147 Y NON-LTN OUT
RV148 Y SW
RV149 C RF
RV150 YA RF
RV151 YB RF
RV152 C NOM-LTN
RV153 Y RF
RV154 Y DM GAIN
RV155 C DM GAIN
RV156 C RF MAIN
RV157 Y RF MAIN
RV158 Y NON-LTN OUT
RV159 Y SW
RV160 C RF
RV161 YA RF
RV162 YB RF
RV163 C NOM-LTN
RV164 Y RF
RV165 Y DM GAIN
RV166 C DM GAIN
RV167 C RF MAIN
RV168 Y RF MAIN
RV169 Y NON-LTN OUT
RV170 Y SW
RV171 C RF
RV172 YA RF
RV173 YB RF
RV174 C NOM-LTN
RV175 Y RF
RV176 Y DM GAIN
RV177 C DM GAIN
RV178 C RF MAIN
RV179 Y RF MAIN
RV180 Y NON-LTN OUT
RV181 Y SW
RV182 C RF
RV183 YA RF
RV184 YB RF
RV185 C NOM-LTN
RV186 Y RF
RV187 Y DM GAIN
RV188 C DM GAIN
RV189 C RF MAIN
RV190 Y RF MAIN
RV191 Y NON-LTN OUT
RV192 Y SW
RV193 C RF
RV194 YA RF
RV195 YB RF
RV196 C NOM-LTN
RV197 Y RF
RV198 Y DM GAIN
RV199 C DM GAIN
RV200 C RF MAIN
RV201 Y RF MAIN
RV202 Y NON-LTN OUT
RV203 Y SW
RV204 C RF
RV205 YA RF
RV206 YB RF
RV207 C NOM-LTN
RV208 Y RF
RV209 Y DM GAIN
RV210 C DM GAIN
RV211 C RF MAIN
RV212 Y RF MAIN
RV213 Y NON-LTN OUT
RV214 Y SW
RV215 C RF
RV216 YA RF
RV217 YB RF
RV218 C NOM-LTN
RV219 Y RF
RV220 Y DM GAIN
RV221 C DM GAIN
RV222 C RF MAIN
RV223 Y RF MAIN
RV224 Y NON-LTN OUT
RV225 Y SW
RV226 C RF
RV227 YA RF
RV228 YB RF
RV229 C NOM-LTN
RV230 Y RF
RV231 Y DM GAIN
RV232 C DM GAIN
RV233 C RF MAIN
RV234 Y RF MAIN
RV235 Y NON-LTN OUT
RV236 Y SW
RV237 C RF
RV238 YA RF
RV239 YB RF
RV240 C NOM-LTN
RV241 Y RF
RV242 Y DM GAIN
RV243 C DM GAIN
RV244 C RF MAIN
RV245 Y RF MAIN
RV246 Y NON-LTN OUT
RV247 Y SW
RV248 C RF
RV249 YA RF
RV250 YB RF
RV251 C NOM-LTN
RV252 Y RF
RV253 Y DM GAIN
RV254 C DM GAIN
RV255 C RF MAIN
RV256 Y RF MAIN
RV257 Y NON-LTN OUT
RV258 Y SW
RV259 C RF
RV260 YA RF
RV261 YB RF
RV262 C NOM-LTN
RV263 Y RF
RV264 Y DM GAIN
RV265 C DM GAIN
RV266 C RF MAIN
RV267 Y RF MAIN
RV268 Y NON-LTN OUT
RV269 Y SW
RV270 C RF
RV271 YA RF
RV272 YB RF
RV273 C NOM-LTN
RV274 Y RF
RV275 Y DM GAIN
RV276 C DM GAIN
RV277 C RF MAIN
RV278 Y RF MAIN
RV279 Y NON-LTN OUT
RV280 Y SW
RV281 C RF
RV282 YA RF
RV283 YB RF
RV284 C NOM-LTN
RV285 Y RF
RV286 Y DM GAIN
RV287 C DM GAIN
RV288 C RF MAIN
RV289 Y RF MAIN
RV290 Y NON-LTN OUT
RV291 Y SW
RV292 C RF
RV293 YA RF
RV294 YB RF
RV295 C NOM-LTN
RV296 Y RF
RV297 Y DM GAIN
RV298 C DM GAIN
RV299 C RF MAIN
RV300 Y RF MAIN
RV301 Y NON-LTN OUT
RV302 Y SW
RV303 C RF
RV304 YA RF
RV305 YB RF
RV306 C NOM-LTN
RV307 Y RF
RV308 Y DM GAIN
RV309 C DM GAIN
RV310 C RF MAIN
RV311 Y RF MAIN
RV312 Y NON-LTN OUT
RV313 Y SW
RV314 C RF
RV315 YA RF
RV316 YB RF
RV317 C NOM-LTN
RV318 Y RF
RV319 Y DM GAIN
RV320 C DM GAIN
RV321 C RF MAIN
RV322 Y RF MAIN
RV323 Y NON-LTN OUT
RV324 Y SW
RV325 C RF
RV326 YA RF
RV327 YB RF
RV328 C NOM-LTN
RV329 Y RF
RV330 Y DM GAIN
RV331 C DM GAIN
RV332 C RF MAIN
RV333 Y RF MAIN
RV334 Y NON-LTN OUT
RV335 Y SW
RV336 C RF
RV337 YA RF
RV338 YB RF
RV339 C NOM-LTN
RV340 Y RF
RV341 Y DM GAIN
RV342 C DM GAIN
RV343 C RF MAIN
RV344 Y RF MAIN
RV345 Y NON-LTN OUT
RV346 Y SW
RV347 C RF
RV348 YA RF
RV349 YB RF
RV350 C NOM-LTN
RV351 Y RF
RV352 Y DM GAIN
RV353 C DM GAIN
RV354 C RF MAIN
RV355 Y RF MAIN
RV356 Y NON-LTN OUT
RV357 Y SW
RV358 C RF
RV359 YA RF
RV360 YB RF
RV361 C NOM-LTN
RV362 Y RF
RV363 Y DM GAIN
RV364 C DM GAIN
RV365 C RF MAIN
RV366 Y RF MAIN
RV367 Y NON-LTN OUT
RV368 Y SW
RV369 C RF
RV370 YA RF
RV371 YB RF
RV372 C NOM-LTN
RV373 Y RF
RV374 Y DM GAIN
RV375 C DM GAIN
RV376 C RF MAIN
RV377 Y RF MAIN
RV378 Y NON-LTN OUT
RV379 Y SW
RV380 C RF
RV381 YA RF
RV382 YB RF
RV383 C NOM-LTN
RV384 Y RF
RV385 Y DM GAIN
RV386 C DM GAIN
RV387 C RF MAIN
RV388 Y RF MAIN
RV389 Y NON-LTN OUT
RV390 Y SW
RV391 C RF
RV392 YA RF
RV393 YB RF
RV394 C NOM-LTN
RV395 Y RF
RV396 Y DM GAIN
RV397 C DM GAIN
RV398 C RF MAIN
RV399 Y RF MAIN
RV400 Y NON-LTN OUT
RV401 Y SW
RV402 C RF
RV403 YA RF
RV404 YB RF
RV405 C NOM-LTN
RV406 Y RF
RV407 Y DM GAIN
RV408 C DM GAIN
RV409 C RF MAIN
RV410 Y RF MAIN
RV411 Y NON-LTN OUT
RV412 Y SW
RV413 C RF
RV414 YA RF
RV415 YB RF
RV416 C NOM-LTN
RV417 Y RF
RV418 Y DM GAIN
RV419 C DM GAIN
RV420 C RF MAIN
RV421 Y RF MAIN
RV422 Y NON-LTN OUT
RV423 Y SW
RV424 C RF
RV425 YA RF
RV426 YB RF
RV427 C NOM-LTN
RV428 Y RF
RV429 Y DM GAIN
RV430 C DM GAIN
RV431 C RF MAIN
RV432 Y RF MAIN
RV433 Y NON-LTN OUT
RV434 Y SW
RV435 C RF
RV436 YA RF
RV437 YB RF
RV438 C NOM-LTN
RV439 Y RF
RV440 Y DM GAIN
RV441 C DM GAIN
RV442 C RF MAIN
RV443 Y RF MAIN
RV444 Y NON-LTN OUT
RV445 Y SW
RV446 C RF
RV447 YA RF
RV448 YB RF
RV449 C NOM-LTN
RV450 Y RF
RV451 Y DM GAIN
RV452 C DM GAIN
RV453 C RF MAIN
RV454 Y RF MAIN
RV455 Y NON-LTN OUT
RV456 Y SW
RV457 C RF
RV458 YA RF
RV459 YB RF
RV460 C NOM-LTN
RV461 Y RF
RV462 Y DM GAIN
RV463 C DM GAIN
RV464 C RF MAIN
RV465 Y RF MAIN
RV466 Y NON-LTN OUT
RV467 Y SW
RV468 C RF
RV469 YA RF
RV470 YB RF
RV471 C NOM-LTN
RV472 Y RF
RV473 Y DM GAIN
RV474 C DM GAIN
RV475 C RF MAIN
RV476 Y RF MAIN
RV477 Y NON-LTN OUT
RV478 Y SW
RV479 C RF
RV480 YA RF
RV481 YB RF
RV482 C NOM-LTN
RV483 Y RF
RV484 Y DM GAIN
RV485 C DM GAIN
RV486 C RF MAIN
RV487 Y RF MAIN
RV488 Y NON-LTN OUT
RV489 Y SW
RV490 C RF
RV491 YA RF
RV492 YB RF
RV493 C NOM-LTN
RV494 Y RF
RV495 Y DM GAIN
RV496 C DM GAIN
RV497 C RF MAIN
RV498 Y RF MAIN
RV499 Y NON-LTN OUT
RV500 Y SW
RV501 C RF
RV502 YA RF
RV503 YB RF
RV504 C NOM-LTN
RV505 Y RF
RV506 Y DM GAIN
RV507 C DM GAIN
RV508 C RF MAIN
RV509 Y RF MAIN
RV510 Y NON-LTN OUT
RV511 Y SW
RV512 C RF
RV513 YA RF
RV514 YB RF
RV515 C NOM-LTN
RV516 Y RF
RV517 Y DM GAIN
RV518 C DM GAIN
RV519 C RF MAIN
RV520 Y RF MAIN
RV521 Y NON-LTN OUT
RV522 Y SW
RV523 C RF
RV524 YA RF
RV525 YB RF
RV526 C NOM-LTN
RV527 Y RF
RV528 Y DM GAIN
RV529 C DM GAIN
RV530 C RF MAIN
RV531 Y RF MAIN
RV532 Y NON-LTN OUT
RV533 Y SW
RV534 C RF
RV535 YA RF
RV536 YB RF
RV537 C NOM-LTN
RV538 Y RF
RV539 Y DM GAIN
RV540 C DM GAIN
RV541 C RF MAIN
RV542 Y RF MAIN
RV543 Y NON-LTN OUT
RV544 Y SW
RV545 C RF
RV546 YA RF
RV547 YB RF
RV548 C NOM-LTN
RV549 Y RF
RV550 Y DM GAIN
RV551 C DM GAIN
RV552 C RF MAIN
RV553 Y RF MAIN
RV554 Y NON-LTN OUT
RV555 Y SW
RV556 C RF
RV557 YA RF
RV558 YB RF
RV559 C NOM-LTN
RV560 Y RF
RV561 Y DM GAIN
RV562 C DM GAIN
RV563 C RF MAIN
RV564 Y RF MAIN
RV565 Y NON-LTN OUT
RV566 Y SW
RV567 C RF
RV568 YA RF
RV569 YB RF
RV570 C NOM-LTN
RV571 Y RF
RV572 Y DM GAIN
RV573 C DM GAIN
RV574 C RF MAIN
RV575 Y RF MAIN
RV576 Y NON-LTN OUT
RV577 Y SW
RV578 C RF
RV579 YA RF
RV580 YB RF
RV581 C NOM-LTN
RV582 Y RF
RV583 Y DM GAIN
RV584 C DM GAIN
RV585 C RF MAIN
RV586 Y RF MAIN
RV587 Y NON-LTN OUT
RV588 Y SW
RV589 C RF
RV590 YA RF
RV591 YB RF
RV592 C NOM-LTN
RV593 Y RF
RV594 Y DM GAIN
RV595 C DM GAIN
RV596 C RF MAIN
RV597 Y RF MAIN
RV598 Y NON-LTN OUT
RV599 Y SW
RV600 C RF
RV601 YA RF
RV602 YB RF
RV603 C NOM-LTN
RV604 Y RF
RV605 Y DM GAIN
RV606 C DM GAIN
RV607 C RF MAIN
RV608 Y RF MAIN
RV609 Y NON-LTN OUT
RV610 Y SW
RV611 C RF
RV612 YA RF
RV613 YB RF
RV614 C NOM-LTN
RV615 Y RF
RV616 Y DM GAIN
RV617 C DM GAIN
RV618 C RF MAIN
RV619 Y RF MAIN
RV620 Y NON-LTN OUT
RV621 Y SW
RV622 C RF
RV623 YA RF
RV624 YB RF
RV625 C NOM-LTN
RV626 Y RF
RV627 Y DM GAIN
RV628 C DM GAIN
RV629 C RF MAIN
RV630 Y RF MAIN
RV631 Y NON-LTN OUT
RV632 Y SW
RV633 C RF
RV634 YA RF
RV635 YB RF
RV636 C NOM-LTN
RV637 Y RF
RV638 Y DM GAIN
RV639 C DM GAIN
RV640 C RF MAIN
RV641 Y RF MAIN
RV642 Y NON-LTN OUT
RV643 Y SW
RV644 C RF
RV645 YA RF
RV646 YB RF
RV647 C NOM-LTN
RV648 Y RF
RV649 Y DM GAIN
RV650 C DM GAIN
RV651 C RF MAIN
RV652 Y RF MAIN
RV653 Y NON-LTN OUT
RV654 Y SW
RV655 C RF
RV656 YA RF
RV657 YB RF
RV658 C NOM-LTN
RV659 Y RF
RV660 Y DM GAIN
RV661 C DM GAIN
RV662 C RF MAIN
RV663 Y RF MAIN
RV664 Y NON-LTN OUT
RV665 Y SW
RV666 C RF
RV667 YA RF
RV668 YB RF
RV669 C NOM-LTN
RV670 Y RF
RV671 Y DM GAIN
RV672 C DM GAIN
RV673 C RF MAIN
RV674 Y RF MAIN
RV675 Y NON-LTN OUT
RV676 Y SW
RV677 C RF
RV678 YA RF
RV679 YB RF
RV680 C NOM-LTN
RV681 Y RF
RV682 Y DM GAIN
RV683 C DM GAIN
RV684 C RF MAIN
RV685 Y RF MAIN
RV686 Y NON-LTN OUT
RV687 Y SW
RV688 C RF
RV689 YA RF
RV690 YB RF
RV691 C NOM-LTN
RV692 Y RF
RV693 Y DM GAIN
RV694 C DM GAIN
RV695 C RF MAIN
RV696 Y RF MAIN
RV697 Y NON-LTN OUT
RV698 Y SW
RV699 C RF
RV700 YA RF
RV701 YB RF
RV702 C NOM-LTN
RV703 Y RF
RV704 Y DM GAIN
RV705 C DM GAIN
RV706 C RF MAIN
RV707 Y RF MAIN
RV708 Y NON-LTN OUT
RV709 Y SW
RV710 C RF
RV711 YA RF
RV712 YB RF
RV713 C NOM-LTN
RV714 Y RF
RV715 Y DM GAIN
RV716 C DM GAIN
RV717 C RF MAIN
RV718 Y RF MAIN
RV719 Y NON-LTN OUT
RV720 Y SW
RV721 C RF
RV722 YA RF
RV723 YB RF
RV724 C NOM-LTN
RV725 Y RF
RV726 Y DM GAIN
RV727 C DM GAIN
RV728 C RF MAIN
RV729 Y RF MAIN
RV730 Y NON-LTN OUT
RV731 Y SW
RV732 C RF
RV733 YA RF
RV734 YB RF
RV735 C NOM-LTN
RV736 Y RF
RV737 Y DM GAIN
RV738 C DM GAIN
RV739 C RF MAIN
RV740 Y RF MAIN
RV741 Y NON-LTN OUT
RV742 Y SW
RV743 C RF
RV744 YA RF
RV745 YB RF
RV746 C NOM-LTN
RV747 Y RF
RV748 Y DM GAIN
RV749 C DM GAIN
RV750 C RF MAIN
RV751 Y RF MAIN
RV752 Y NON-LTN OUT
RV753 Y SW
RV754 C RF
RV755 YA RF
RV756 YB RF
RV757 C NOM-LTN
RV758 Y RF
RV759 Y DM GAIN
RV760 C DM GAIN
RV761 C RF MAIN
RV762 Y RF MAIN
RV763 Y NON-LTN OUT
RV764 Y SW
RV765 C RF
RV766 YA RF
RV767 YB RF
RV768 C NOM-LTN
RV769 Y RF
RV770 Y DM GAIN
RV771 C DM GAIN
RV772 C RF MAIN
RV773 Y RF MAIN
RV774 Y NON-LTN OUT
RV775 Y SW
RV776 C RF
RV777 YA RF
RV778 YB RF
RV779 C NOM-LTN
RV780 Y RF
RV781 Y DM GAIN
RV782 C DM GAIN
RV783 C RF MAIN
RV784 Y RF MAIN
RV785 Y NON-LTN OUT
RV786 Y SW
RV787 C RF
RV788 YA RF
RV789 YB RF
RV790 C NOM-LTN
RV791 Y RF
RV792 Y DM GAIN
RV793 C DM GAIN
RV794 C RF MAIN
RV795 Y RF MAIN
RV796 Y NON-LTN OUT
RV797 Y SW
RV798 C RF
RV799 YA RF
RV800 YB RF
RV801 C NOM-LTN
RV802 Y RF
RV803 Y DM GAIN
RV804 C DM GAIN
RV805 C RF MAIN
RV806 Y RF MAIN
RV807 Y NON-LTN OUT
RV808 Y SW
RV809 C RF
RV810 YA RF
RV811 YB RF
RV812 C NOM-LTN
RV813 Y RF
RV814 Y DM GAIN
RV815 C DM GAIN
RV816 C RF MAIN
RV817 Y RF MAIN
RV818 Y NON-LTN OUT
RV819 Y SW
RV820 C RF
RV821 YA RF
RV822 YB RF
RV823 C NOM-LTN
RV824 Y RF
RV825 Y DM GAIN
RV826 C DM GAIN
RV827 C RF MAIN
RV828 Y RF MAIN
RV829 Y NON-LTN OUT
RV830 Y SW
RV831 C RF
RV832 YA RF
RV833 YB RF
RV834 C NOM-LTN
RV835 Y RF
RV836 Y DM GAIN
RV837 C DM GAIN
RV838 C RF MAIN
RV839 Y RF MAIN
RV840 Y NON-LTN OUT
RV841 Y SW
RV842 C RF
RV843 YA RF
RV844 YB RF
RV845 C NOM-LTN
RV846 Y RF
RV847 Y DM GAIN
RV848 C DM GAIN
RV849 C RF MAIN
RV850 Y RF MAIN
RV851 Y NON-LTN OUT
RV852 Y SW
RV853 C RF
RV854 YA RF
RV855 YB RF
RV856 C NOM-LTN
RV857 Y RF
RV858 Y DM GAIN
RV859 C DM GAIN
RV860 C RF MAIN
RV861 Y RF MAIN
RV862 Y NON-LTN OUT
RV863 Y SW
RV864 C RF
RV865 YA RF
RV866 YB RF
RV867 C NOM-LTN
RV868 Y RF
RV869 Y DM GAIN
RV870 C DM GAIN
RV871 C RF MAIN
RV872 Y RF MAIN
RV873 Y NON-LTN OUT
RV874 Y SW
RV875 C RF
RV876 YA RF
RV877 YB RF
RV878 C NOM-LTN
RV879 Y RF
RV880 Y DM GAIN
RV881 C DM GAIN
RV882 C RF MAIN
RV883 Y RF MAIN
RV884 Y NON-LTN OUT
RV885 Y SW
RV886 C RF
RV887 YA RF
RV888 YB RF
RV889 C NOM-LTN
RV890 Y RF
RV891 Y DM GAIN
RV892 C DM GAIN
RV893 C RF MAIN
RV894 Y RF MAIN
RV895 Y NON-LTN OUT
RV896 Y SW
RV897 C RF
RV898 YA RF
RV899 YB RF
RV900 C NOM-LTN
RV901 Y RF
RV902 Y DM GAIN
RV903 C DM GAIN
RV904 C RF MAIN
RV905 Y RF MAIN
RV906 Y NON-LTN OUT
RV907 Y SW
RV908 C RF
RV909 YA RF
RV910 YB RF
RV911 C NOM-LTN
RV912 Y RF
RV913 Y DM GAIN
RV914 C DM GAIN
RV915 C RF MAIN
RV916 Y RF MAIN
RV917 Y NON-LTN OUT
RV918 Y SW
RV919 C RF
RV920 YA RF
RV921 YB RF
RV922 C NOM-LTN
RV923 Y RF
RV924 Y DM GAIN
RV925 C DM GAIN
RV926 C RF MAIN
RV927 Y RF MAIN
RV928 Y NON-LTN OUT
RV929 Y SW
RV930 C RF
RV931 YA RF
RV932 YB RF
RV933 C NOM-LTN
RV934 Y RF
RV935 Y DM GAIN
RV936 C DM GAIN
RV937 C RF MAIN
RV938 Y RF MAIN
RV939 Y NON-LTN OUT
RV940 Y SW
RV941 C RF
RV942 YA RF
RV943 YB RF
RV944 C NOM-LTN
RV945 Y RF
RV946 Y DM GAIN
RV947 C DM GAIN
RV948 C RF MAIN
RV949 Y RF MAIN
RV950 Y NON-LTN OUT
RV951 Y SW
RV952 C RF
RV953 YA RF
RV954 YB RF
RV955 C NOM-LTN
RV956 Y RF
RV957 Y DM GAIN
RV958 C DM GAIN
RV959 C RF MAIN
RV960 Y RF MAIN
RV961 Y NON-LTN OUT
RV962 Y SW
RV963 C RF
RV964 YA RF
RV965 YB RF
RV966 C NOM-LTN
RV967 Y RF
RV968 Y DM GAIN
RV969 C DM GAIN
RV970 C RF MAIN
RV971 Y RF MAIN
RV972 Y NON-LTN OUT
RV973 Y SW
RV974 C RF
RV975 YA RF
RV976 YB RF
RV977 C NOM-LTN
RV978 Y RF
RV979 Y DM GAIN
RV980 C DM GAIN
RV981 C RF MAIN
RV982 Y RF MAIN
RV983 Y NON-LTN OUT
RV984 Y SW
RV985 C RF
RV986 YA RF
RV987 YB RF
RV988 C NOM-LTN
RV989 Y RF
RV990 Y DM GAIN
RV991 C DM GAIN
RV992 C RF MAIN
RV993 Y RF MAIN
RV994 Y NON-LTN OUT
RV995 Y SW
RV996 C RF
RV997 YA RF
RV998 YB RF
RV999 C NOM-LTN
RV1000 Y RF
RV1001 Y DM GAIN
RV1002 C DM GAIN
RV1003 C RF MAIN
RV1004 Y RF MAIN
RV1005 Y NON-LTN OUT
RV1006 Y SW
RV1007 C RF
RV1008 YA RF
RV1009 YB RF
RV1010 C NOM-LTN
RV1011 Y RF
RV1012 Y DM GAIN
RV1013 C DM GAIN
RV1014 C RF MAIN
RV1015 Y RF MAIN
RV1016 Y NON-LTN OUT
RV1017 Y SW
RV1018 C RF
RV1019 YA RF
RV1020 YB RF
RV1021 C NOM-LTN
RV1022 Y RF
RV1023 Y DM GAIN
RV1024 C DM GAIN
RV1025 C RF MAIN
RV1026 Y RF MAIN
RV1027 Y NON-LTN OUT
RV1028 Y SW
RV1029 C RF
RV1030 YA RF
RV1031 YB RF
RV1032 C NOM-LTN
RV1033 Y RF
RV1034 Y DM GAIN
RV1035 C DM GAIN
RV1036 C RF MAIN
RV1037 Y RF MAIN
RV1038 Y NON-LTN OUT
RV1039 Y SW
RV1040 C RF
RV1041 YA RF
RV1042 YB RF
RV1043 C NOM-LTN
RV1044 Y RF
RV1045 Y DM GAIN
RV1046 C DM GAIN
RV1047 C RF MAIN
RV1048 Y RF MAIN
RV1049 Y NON-LTN OUT
RV1050 Y SW
RV1051 C RF
RV1052 YA RF
RV1053 YB RF
RV1054 C NOM-LTN
RV1055 Y RF
RV1056 Y DM GAIN
RV1057 C DM GAIN
RV1058 C RF MAIN
RV1059 Y RF MAIN
RV1060 Y NON-LTN OUT
RV1061 Y SW
RV1062 C RF
RV1063 YA RF
RV1064 YB RF
RV1065 C NOM-LTN
RV1066 Y RF
RV1067 Y DM GAIN
RV1068 C DM GAIN
RV1069 C RF MAIN
RV1070 Y RF MAIN
RV1071 Y NON-LTN OUT
RV1072 Y SW
RV1073 C RF
RV1074 YA RF
RV1075 YB RF
RV1076 C NOM-LTN
RV1077 Y RF
RV1078 Y DM GAIN
RV1079 C DM GAIN
RV1080 C RF MAIN
RV1081 Y RF MAIN
RV1082 Y NON-LTN OUT
RV1083 Y SW
RV1084 C RF
RV1085 YA RF
RV1086 YB RF
RV1087 C NOM-LTN
RV1088 Y RF
RV1089 Y DM GAIN
RV1090 C DM GAIN
RV1091 C RF MAIN
RV1092 Y RF MAIN
RV1093 Y NON-LTN OUT
RV1094 Y SW
RV1095 C RF
RV1096 YA RF
RV1097 YB RF
RV1098 C NOM-LTN
RV1099 Y RF
RV1100 Y DM GAIN
RV1101 C DM GAIN
RV1102 C RF MAIN
RV1103 Y RF MAIN
RV1104 Y NON-LTN OUT
RV1105 Y SW
RV1106 C RF
RV1107 YA RF
RV1108 YB RF
RV1109 C NOM-LTN
RV1110 Y RF
RV1111 Y DM GAIN
RV1112 C DM GAIN
RV1113 C RF MAIN
RV1114 Y RF MAIN
RV1115 Y NON-LTN OUT
RV1116 Y SW
RV1117 C RF
RV1118 YA RF
RV1119 YB RF
RV1120 C NOM-LTN
RV1121 Y RF
RV1122 Y DM GAIN
RV1123 C DM GAIN
RV1124 C RF MAIN
RV1125 Y RF MAIN
RV1126 Y NON-LTN OUT
RV1127 Y SW
RV1128 C RF
RV1129 YA RF
RV1130 YB RF
RV1131 C NOM-LTN
RV1132 Y RF
RV1133 Y DM GAIN
RV1134 C DM GAIN
RV1135 C RF MAIN
RV1136 Y RF MAIN
RV1137 Y NON-LTN OUT
RV1138 Y SW
RV1139 C RF
RV1140 YA RF
RV1141 YB RF
RV1142 C NOM-LTN
RV1143 Y RF
RV1144 Y DM GAIN
RV1145 C DM GAIN
RV1146 C RF MAIN
RV1147 Y RF MAIN
RV1148 Y NON-LTN OUT
RV1149 Y SW
RV1150 C RF
RV1151 YA RF
RV1152 YB RF
RV1153 C NOM-LTN
RV1154 Y RF
RV1155 Y DM GAIN
RV1156 C DM GAIN
RV1157 C RF MAIN
RV1158 Y RF MAIN
RV1159 Y NON-LTN OUT
RV1160 Y SW
RV1161 C RF
RV1162 YA RF
RV1163 YB RF
RV1164 C NOM-LTN
RV1165 Y RF
RV1166 Y DM GAIN
RV1167 C DM GAIN
RV1168 C RF MAIN
RV1169 Y RF MAIN
RV1170 Y NON-LTN OUT
RV1171 Y SW
RV1172 C RF
RV1173 YA RF
RV1174 YB RF
RV1175 C NOM-LTN
RV1176 Y RF
RV1177 Y DM GAIN
RV1178 C DM GAIN
RV1179 C RF MAIN
RV1180 Y RF MAIN
RV1181 Y NON-LTN OUT
RV1182 Y SW
RV1183 C RF
RV1184 YA RF
RV1185 YB RF
RV1186 C NOM-LTN
RV1187 Y RF
RV1188 Y DM GAIN
RV1189 C DM GAIN
RV1190 C RF MAIN
RV1191 Y RF MAIN
RV1192 Y NON-LTN OUT
RV1193 Y SW
RV1194 C RF
RV1195 YA RF
RV1196 YB RF
RV1197 C NOM-LTN
RV1198 Y RF
RV1199 Y DM GAIN
RV1200 C DM GAIN
RV1201 C RF MAIN
RV1202 Y RF MAIN
RV1203 Y NON-LTN OUT
RV1204 Y SW
RV1205 C RF
RV1206 YA RF
RV1207 YB RF
RV1208 C NOM-LTN
RV1209 Y RF
RV1210 Y DM GAIN
RV1211 C DM GAIN
RV1212 C RF MAIN
RV1213 Y RF MAIN
RV1214 Y NON-LTN OUT
RV1215 Y SW
RV1216 C RF
RV1217 YA RF
RV1218 YB RF
RV1219 C NOM-LTN
RV1220 Y RF
RV1221 Y DM GAIN
RV1222 C DM GAIN
RV1223 C RF MAIN
RV1224 Y RF MAIN
RV1225 Y NON-LTN OUT
RV1226 Y SW
RV1227 C RF
RV1228 YA RF
RV1229 YB RF
RV1230 C NOM-LTN
RV1231 Y RF
RV1232 Y DM GAIN
RV1233 C DM GAIN
RV1234 C RF MAIN
RV1235 Y RF MAIN
RV1236 Y NON-LTN OUT
RV1237 Y SW
RV1238 C RF
RV1239 YA RF
RV1240 YB RF
RV1241 C NOM-LTN
RV1242 Y RF
RV1243 Y DM GAIN
RV1244 C DM GAIN
RV1245 C RF MAIN
RV1246 Y RF MAIN
RV1247 Y NON-LTN OUT
RV1248 Y SW
RV1249 C RF
RV1250 YA RF
RV1251 YB RF
RV1252 C NOM-LTN
RV1253 Y RF
RV1254 Y DM GAIN
RV1255 C DM GAIN
RV1256 C RF MAIN
RV1257 Y RF MAIN
RV1258 Y NON-LTN OUT
RV1259 Y SW
RV1260 C RF
RV1261 YA RF
RV1262 YB RF
RV1263 C NOM-LTN
RV1264 Y RF
RV1265 Y DM GAIN
RV1266 C DM GAIN
RV1267 C RF MAIN
RV1268 Y RF MAIN
RV1269 Y NON-LTN OUT
RV1270 Y SW
RV1271 C RF
RV1272 YA RF
RV1273 YB RF
RV1274 C NOM-LTN
RV1275 Y RF
RV1276 Y DM GAIN
RV1277 C DM GAIN
RV1278 C RF MAIN
RV1279 Y RF MAIN
RV1280 Y NON-LTN OUT
RV1281 Y SW
RV1282 C RF
RV1283 YA RF
RV1284 YB RF
RV1285 C NOM-LTN
RV1286 Y RF
RV1287 Y DM GAIN
RV1288 C DM GAIN
RV1289 C RF MAIN
RV1290 Y RF MAIN
RV1291 Y NON-LTN OUT
RV1292 Y SW
RV1293 C RF
RV1294 YA RF
RV1295 YB RF
RV1296 C NOM-LTN
RV1297 Y RF
RV1298 Y DM GAIN
RV1299 C DM GAIN
RV1300 C RF MAIN
RV1301 Y RF MAIN
RV1302 Y NON-LTN OUT
RV1303 Y SW
RV1304 C RF
RV1305 YA RF
RV1306 YB RF
RV1307 C NOM-LTN
RV1308 Y RF
RV1309 Y DM GAIN
RV1310 C DM GAIN
RV1311 C RF MAIN
RV1312 Y RF MAIN
RV1313 Y NON-LTN OUT
RV1314 Y SW
RV1315 C RF
RV1316 YA RF
RV1317 YB RF
RV1318 C NOM-LTN
RV1319 Y RF
RV1320 Y DM GAIN
RV1321 C DM GAIN
RV1322 C RF MAIN
RV1323 Y RF MAIN
RV1324 Y NON-LTN OUT
RV1325 Y SW
RV1326 C RF
RV1327 YA RF
RV1328 YB RF
RV1329 C NOM-LTN
RV1330 Y RF
RV1331 Y DM GAIN
RV1332 C DM GAIN
RV1333 C RF MAIN
RV1334 Y RF MAIN
RV1335 Y NON-LTN OUT
RV1336 Y SW
RV1337 C RF
RV1338 YA RF
RV1339 YB RF
RV1340 C NOM-LTN
RV1341 Y RF
RV1342 Y DM GAIN
RV1343 C DM GAIN
RV1344 C RF MAIN
RV1345 Y RF MAIN
RV1346 Y NON-LTN OUT
RV1347 Y SW
RV1348 C RF
RV1349 YA RF
RV1350 YB RF
RV1351 C NOM-LTN
RV1352 Y RF
RV1353 Y DM GAIN
RV1354 C DM GAIN
RV1355 C RF MAIN
RV1356 Y RF MAIN
RV1357 Y NON-LTN OUT
RV1358 Y SW
RV1359 C RF
RV1360 YA RF
RV1361 YB RF
RV1362 C NOM-LTN
RV1363 Y RF
RV1364 Y DM GAIN
RV1365 C DM GAIN
RV1366 C RF MAIN
RV1367 Y RF MAIN
RV1368 Y NON-LTN OUT
RV1369 Y SW
RV1370 C RF
RV1371 YA RF
RV1372 YB RF
RV1373 C NOM-LTN
RV1374 Y RF
RV1375 Y DM GAIN
RV1376 C DM GAIN
RV1377 C RF MAIN
RV1378 Y RF MAIN
RV1379 Y NON-LTN OUT
RV1380 Y SW
RV1381 C RF
RV1382 YA RF
RV1383 YB RF
RV1384 C NOM-LTN
RV1385 Y RF
RV1386 Y DM GAIN
RV1387 C DM GAIN
RV1388 C RF MAIN
RV1389 Y RF MAIN
RV1390 Y NON-LTN OUT
RV1391 Y SW
RV1392 C RF
RV1393 YA RF
RV1394 YB RF
RV1395 C NOM-LTN
RV1396 Y RF
RV1397 Y DM GAIN
RV1398 C DM GAIN
RV1399 C RF MAIN
RV1400 Y RF MAIN
RV1401 Y NON-LTN OUT
RV1402 Y SW
RV1403 C RF
RV1404 YA RF
RV1405 YB RF
RV1406 C NOM-LTN
RV1407 Y RF
RV1408 Y DM GAIN
RV1409 C DM GAIN
RV1410 C RF MAIN
RV1411 Y RF MAIN
RV1412 Y NON-LTN OUT
RV1413 Y SW
RV1414 C RF
RV1415 YA RF
RV1416 YB RF
RV1417 C NOM-LTN
RV1418 Y RF
RV1419 Y DM GAIN
RV1420 C DM GAIN
RV1421 C RF MAIN
RV1422 Y RF MAIN
RV1423 Y NON-LTN OUT
RV1424 Y SW
RV1425 C RF
RV1426 YA RF
RV1427 YB RF
RV1428 C NOM-LTN
RV1429 Y RF
RV1430 Y DM GAIN
RV1431 C DM GAIN
RV1432 C RF MAIN
RV1433 Y RF MAIN
RV1434 Y NON-LTN OUT
RV1435 Y SW
RV1436 C RF
RV1437 YA RF
RV1438

VP-44/44A/44P/44AP (1/648-900-12,13)

	CN103	N-6		IC706	E-2		Q511	C-2		RV504	B-4
	CN104	C-6		IC707	E-1	*	Q512	C-2		RV505	C-3
	CN105	R-5		IC708	F-4	*	Q513	B-5		RV506	B-5
						*	Q514	C-2		RV507	C-3
	DL101	N-4		Q51	B-5		Q515	C-4		RV508	C-5
	DL301	J-4	*	Q101	N-5	*	Q516	B-2		RV509	B-4
			*	Q102	N-4	*	Q517	C-5		RV510	A-4
*	D201	N-2	*	Q103	N-5	*	Q518	C-4		RV511	C-4
*	D401	J-2	*	Q104	N-4	*	Q519	B-2		RV512	A-4
*	D501	A-2	*	Q105	N-4	*	Q520	B-2		RV601 P	E-1
*	D502	B-2	*	Q106	N-3		Q521	B-4		RV602	D-1
*	D503	B-3	*	Q107	N-3		Q522	B-3		RV603	E-1
*	D504	A-4	*	Q108	N-4		Q523	C-4		RV604	E-1
*	D601	D-2	*	Q109	N-4	*	Q601	D-5		RV605	D-1
*	D701	R-4	*	Q110	P-4	*	Q602	E-5		RV606	D-1
			*	Q111	P-5		Q603	D-5		RV607	C-1
	E101	P-6	*	Q112	P-5		Q604	E-5		RV701	F-1
	E102	N-1	*	Q201	M-2		Q605	D-5		RV702	G-1
	E201	R-1	*	Q202	N-1		Q606	E-5		RV703	F-1
	E301	K-5	*	Q203	P-2		Q607	D-4		RV704	G-1
	E401	G-2	*	Q204	N-2		Q608	E-4		RV705	F-3
	E501	B-3	*	Q205	P-2		Q609	D-4		RV706	F-3
	E502	B-6	*	Q206	P-2		Q610	E-4		RV707	F-3
	E601	D-4	*	Q207	N-2		Q611	D-4		RV708	G-3
	E602	D-2	*	Q208	N-1		Q612	E-4		RV709	F-2
			*	Q209	N-1	*	Q613	F-5		RV710	F-2
	FL201	M-1	*	Q210	N-1	*	Q614 P	F-5			
	FL401	H-1	*	Q211	P-2	*	Q615	F-5		TH201	P-2
	FL601	E-1	*	Q212	P-1	*	Q616	D-2		TH401	J-2
			*	Q213	R-2	*	Q617	D-2		TH601	D-2
	IC101	P-4	*	Q214	R-2	*	Q618	D-3			
	IC102	M-5	*	Q215	P-1	*	Q619	E-3		TP101	L-2
	IC103	N-5	*	Q216	N-2	*	Q620	F-5		TP102	P-1
	IC104	L-5	*	Q217	M-2	*	Q621	F-5		TP103	L-1
	IC202	M-2	*	Q218	M-2	*	Q622	D-1		TP104	P-3
	IC203	M-1	*	Q219	M-2	*	Q623	D-1		TP201	P-1
	IC204	P-1	*	Q220	M-2	*	Q624	D-1		TP301	G-1
	IC205	L-2	*	Q301	J-4	*	Q701	F-4		TP302	J-3
	IC301	K-4	*	Q302	J-4	*	Q702	G-4		TP401	L-1
	IC302	G-5	*	Q303	H-4	*	Q703	F-3			
	IC303	H-5	*	Q304	H-5	*	Q704	G-3			
	IC401	H-2	*	Q305	H-4	*	Q705	F-3			
	IC402	H-1	*	Q306	H-3	*	Q706	F-3			
	IC403	K-1	*	Q307	J-3	*	Q707	F-3			
	IC404	G-2	*	Q308	J-4	*	Q708	F-3			
	IC501	B-2	*	Q309	J-4	*	Q709	F-3			
	IC502	A-2	*	Q310	K-3	*	Q710	F-3			
	IC504	B-2	*	Q311	K-5	*	Q711	G-3			
	IC505	B-2	*	Q401	H-2	*	Q712	G-3			
	IC506	A-3	*	Q402	J-1	*	Q713	F-3			
	IC507	B-5	*	Q403	J-1	*	Q714	F-3			
	IC508	B-4	*	Q404	J-2	*	Q715	F-3			
	IC509	A-5	*	Q405	J-1	*	Q716	G-3			
	IC510	A-4	*	Q406	J-1	*	Q717	F-2			
	IC511	A-5	*	Q407	J-1		Q718	E-2			
	IC512	J-6	*	Q408	J-1		Q719	F-2			
	IC513	G-6	*	Q409	J-2	*	Q720	F-2			
	IC514	A-2	*	Q410	J-1	*	Q721	F-2			
	IC515	B-5	*	Q411	J-2		Q722	F-2			
	IC516	C-1	*	Q412	J-2		Q723	G-2			
	IC601	E-5	*	Q413	K-2	*	Q724	F-2			
	IC602	D-4	*	Q414	K-2	*	Q725	F-2			
	IC603	D-3	*	Q415	K-2	*	Q726	F-1			
	IC604	D-3	*	Q416	J-2	*	Q727	F-1			
	IC605	D-3	*	Q417	H-2						
	IC606	E-3	*	Q418	H-2		RV101	L-1			
	IC607	D-2	*	Q501	A-1		RV102	K-1			
	IC608	E-2		Q502	A-1		RV103	P-4			
	IC610	D-2		Q503	A-1		RV201	M-3			
	IC612	D-2		Q504	A-1		RV301	J-1			
	IC613	C-2		Q505	B-1		RV302	H-1			
	IC701	F-2		Q506	B-1		RV303	K-4			
	IC702	F-2		Q507	C-2		RV401	H-3			
	IC703	R-4	*	Q508	B-4		RV501	B-4			
	IC704	R-4	*	Q509	C-3		RV502	C-3			
	IC705	R-4	*	Q510	B-4		RV503	C-3			

* : B SIDE
P : UVW-1400P/1200P ONLY

VP-44/44A/44P/44AP ; Y/C PB PROCESS (PB RF EQ, DEMOD., Y-RF ENVELOPE DET), VIDEO OUTPUT DRIVER, ENCODE, SYNC/CHARA MIX

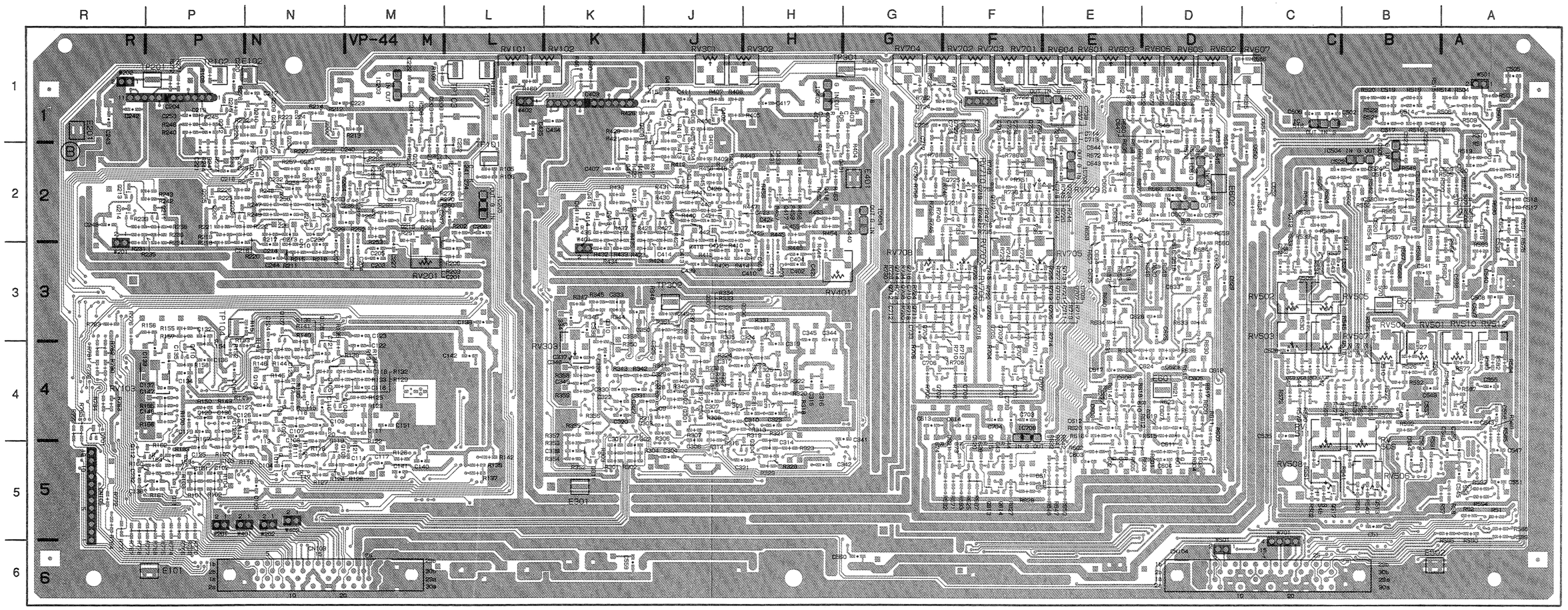

VP-44/44A 1-648-900-12,13 B SIDE

UVW-1400 (J) ; Serial No. 10421 and higher
UVW-1400 (UC) ; Serial No. 11051 and higher
UVW-1400P(EK) ; Serial No. 11491 and higher
UVW-1200 (J) ; Serial No. 10351 and higher
UVW-1200 (UC) ; Serial No. 11091 and higher
UVW-1200P(EK) ; Serial No. 11721 and higher

VP-44/44A/44P/44AP (1/648-900-12,13)

	CN103	N-6		IC706	E-2		Q511	C-2		RV504	B-4
	CN104	C-6		IC707	E-1	*	Q512	C-2		RV505	C-3
	CN105	R-5		IC708	F-4	*	Q513	B-5		RV506	B-5
						*	Q514	C-2		RV507	C-3
	DL101	N-4		Q51	B-5		Q515	C-4		RV508	C-5
	DL301	J-4	*	Q101	N-5	*	Q516	B-2		RV509	B-4
			*	Q102	N-4	*	Q517	C-5		RV510	A-4
*	D201	N-2	*	Q103	N-5	*	Q518	C-4		RV511	C-4
*	D401	J-2	*	Q104	N-4	*	Q519	B-2		RV512	A-4
*	D501	A-2	*	Q105	N-4	*	Q520	B-2		RV601 P	E-1
*	D502	B-2	*	Q106	N-3		Q521	B-4		RV602	D-1
*	D503	B-3	*	Q107	N-3		Q522	B-3		RV603	E-1
*	D504	A-4	*	Q108	N-4		Q523	C-4		RV604	E-1
*	D601	D-2	*	Q109	N-4	*	Q601	D-5		RV605	D-1
*	D701	R-4	*	Q110	P-4	*	Q602	E-5		RV606	D-1
			*	Q111	P-5		Q603	D-5		RV607	C-1
	E101	P-6	*	Q112	P-5		Q604	E-5		RV701	F-1
	E102	N-1	*	Q201	M-2		Q605	D-5		RV702	G-1
	E201	R-1	*	Q202	N-1		Q606	E-5		RV703	F-1
	E301	K-5	*	Q203	P-2		Q607	D-4		RV704	G-1
	E401	G-2	*	Q204	N-2		Q608	E-4		RV705	F-3
	E501	B-3	*	Q205	P-2		Q609	D-4		RV706	F-3
	E502	B-6	*	Q206	P-2		Q610	E-4		RV707	F-3
	E601	D-4	*	Q207	N-2		Q611	D-4		RV708	G-3
	E602	D-2	*	Q208	N-1		Q612	E-4		RV709	F-2
			*	Q209	N-1	*	Q613	F-5		RV710	F-2
	FL201	M-1	*	Q210	N-1	*	Q614 P	F-5			
	FL401	H-1	*	Q211	P-2	*	Q615	F-5		TH201	P-2
	FL601	E-1	*	Q212	P-1	*	Q616	D-2		TH401	J-2
			*	Q213	R-2	*	Q617	D-2		TH601	D-2
	IC101	P-4	*	Q214	R-2	*	Q618	D-3			
	IC102	M-5	*	Q215	P-1	*	Q619	E-3		TP101	L-2
	IC103	N-5	*	Q216	N-2	*	Q620	F-5		TP102	P-1
	IC104	L-5	*	Q217	M-2	*	Q621	F-5		TP103	L-1
	IC202	M-2	*	Q218	M-2	*	Q622	D-1		TP104	P-3
	IC203	M-1	*	Q219	M-2	*	Q623	D-1		TP201	P-1
	IC204	P-1	*	Q220	M-2	*	Q624	D-1		TP301	G-1
	IC205	L-2	*	Q301	J-4	*	Q701	F-4		TP302	J-3
	IC301	K-4	*	Q302	J-4	*	Q702	G-4		TP401	L-1
	IC302	G-5	*	Q303	H-4	*	Q703	F-3			
	IC303	H-5	*	Q304	H-5	*	Q704	G-3			
	IC401	H-2	*	Q305	H-4	*	Q705	F-3			
	IC402	H-1	*	Q306	H-3	*	Q706	F-3			
	IC403	K-1	*	Q307	J-3	*	Q707	F-3			
	IC404	G-2	*	Q308	J-4	*	Q708	F-3			
	IC501	B-2	*	Q309	J-4	*	Q709	F-3			
	IC502	A-2	*	Q310	K-3	*	Q710	F-3			
	IC504	B-2	*	Q311	K-5	*	Q711	G-3			
	IC505	B-2	*	Q401	H-2	*	Q712	G-3			
	IC506	A-3	*	Q402	J-1	*	Q713	F-3			
	IC507	B-5	*	Q403	J-1	*	Q714	F-3			
	IC508	B-4	*	Q404	J-2	*	Q715	F-3			
	IC509	A-5	*	Q405	J-1	*	Q716	G-3			
	IC510	A-4	*	Q406	J-1	*	Q717	F-2			
	IC511	A-5	*	Q407	J-1		Q718	E-2			
	IC512	J-6	*	Q408	J-1		Q719	F-2			
	IC513	G-6	*	Q409	J-2	*	Q720	F-2			
	IC514	A-2	*	Q410	J-1	*	Q721	F-2			
	IC515	B-5	*	Q411	J-2		Q722	F-2			
	IC516	C-1	*	Q412	J-2		Q723	G-2			
	IC601	E-5	*	Q413	K-2	*	Q724	F-2			
	IC602	D-4	*	Q414	K-2	*	Q725	F-2			
	IC603	D-3	*	Q415	K-2	*	Q726	F-1			
	IC604	D-3	*	Q416	J-2	*	Q727	F-1			
	IC605	D-3	*	Q417	H-2						
	IC606	E-3	*	Q418	H-2		RV101	L-1			
	IC607	D-2	*	Q501	A-1		RV102	K-1			
	IC608	E-2		Q502	A-1		RV103	P-4			
	IC610	D-2		Q503	A-1		RV201	M-3			
	IC612	D-2		Q504	A-1		RV301	J-1			
	IC613	C-2		Q505	B-1		RV302	H-1			
	IC701	F-2		Q506	B-1		RV303	K-4			
	IC702	F-2		Q507	C-2		RV401	H-3			
	IC703	R-4	*	Q508	B-4		RV501	B-4			
	IC704	R-4	*	Q509	C-3		RV502	C-3			
	IC705	R-4	*	Q510	B-4		RV503	C-3			

* : B SIDE
P : UVW-1400P/1200P ONLY

VRA-5A/5AP ; Y/C REC PROCESS(DECODE, MOD), CTDM(COMPRESS)

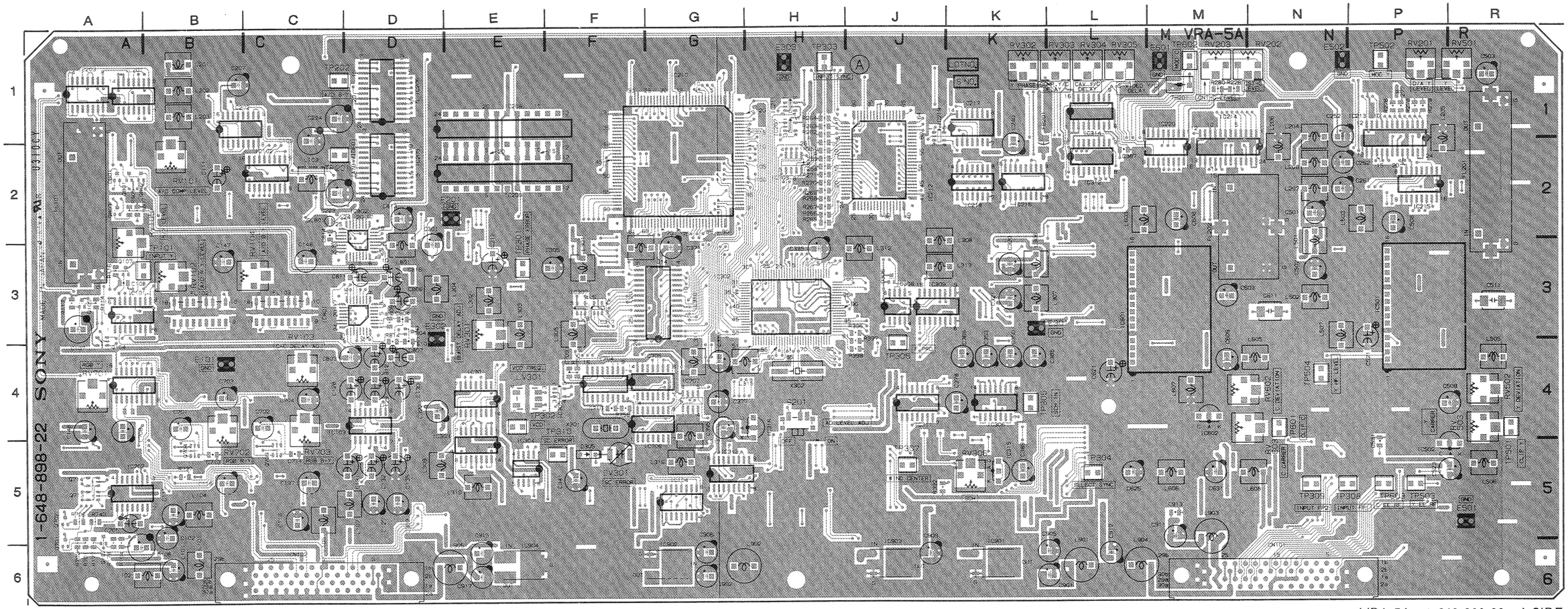

VRA-5A 1-648-898-22 A SIDE

VRA-5A/5AP(1-648-898-22)

CN101		N-6	IC502		R-5	✱Q316		F-5	RV702		B-4
CN102		C-6	IC601		L-4	✱Q317		F-5	RV703		C-4
			IC602		M-4	✱Q318		E-5			
CV301		F-5	IC701		A-4	✱Q319		K-3	S201		H-4
			IC702		A-5	✱Q320		J-3			
✱D101		B-3	IC703		H-2	✱Q321		J-4	TH201	N	M-1
✱D102		C-3	IC704		F-4	✱Q322		J-4			
✱D109		D-4	IC705		G-4	✱Q323		J-4	TP101		A-3
✱D202		H-4	IC706		G-4	✱Q324		F-4	TP201		C-2
✱D301		E-3	IC707		G-4	✱Q325		F-4	TP202		C-1
✱D302	P	E-5	IC801	N	D-3	✱Q508		N-2	TP301		E-3
✱D303		F-4	IC802	N	D-2	✱Q509		P-2	TP302		E-4
D305		F-5	IC901		K-6	✱Q510		R-4	TP303		H-1
D306		J-3	IC902		G-6	✱Q511		N-3	TP304		L-5
✱D701		A-4	IC903		J-6	✱Q512		P-4	TP305		K-4
D801	N	A-2	IC904		E-6	✱Q513		P-4	TP306		J-4
						✱Q514		P-4	TP307		J-5
E101		B-4	LV301		E-4	✱Q515		P-4	TP308		N-5
E201		E-2				✱Q516		N-4	TP309		N-5
E301		K-3	✱Q101		A-3	✱Q517		N-4	TP310		F-5
E302		D-3	Q102		A-5	✱Q518		P-4	TP501		R-4
E303		H-1	✱Q103		A-3	✱Q519		P-5	TP502		P-1
E501		R-5	Q104		A-4	✱Q520		P-5	TP503		P-5
E502		N-1	Q105		A-3	✱Q601		L-2	TP504		N-4
E601		M-1	✱Q106		A-3	✱Q602		M-2	TP601		N-4
			Q107		A-3	✱Q603		N-4	TP602		M-1
FB201		K-2	✱Q108		A-1	✱Q604		M-4	TP603		P-5
			✱Q109		B-2	✱Q605		M-4			
FL101		A-2	✱Q110		B-2	✱Q606		L-4	X301		F-4
FL102		B-3	✱Q111		B-1	✱Q607		M-4	X302		H-4
FL103		C-3	✱Q112		C-1	✱Q608		L-4			
FL201		R-2	✱Q113		C-2	✱Q609		M-5			
FL202		N-2	✱Q114		B-4	✱Q610		M-5			
			✱Q115		B-4	Q701		A-6			
IC101		A-3	✱Q116		B-3	Q702		A-5			
IC102		C-2	✱Q117		B-3	✱Q703		B-5			
IC103		D-4	✱Q118		B-3	Q704		B-5			
IC104		G-5	✱Q119		B-3	✱Q705		B-5			
IC201		A-1	✱Q120		B-2	✱Q706		B-5			
IC202		B-1	✱Q121		C-4	✱Q707		B-4			
IC203		A-1	✱Q122		C-4	✱Q708		C-5			
IC205		D-2	✱Q123		C-4	Q709		C-5			
IC206		D-1	✱Q124		C-3	✱Q710		C-5			
IC207		H-1	✱Q125		C-3	✱Q711		C-5			
IC208		E-1	✱Q126		C-3	✱Q712		C-4			
IC209		E-2	✱Q127		C-3	Q713		A-5			
IC210		G-2	✱Q128		C-3	Q714		A-5			
IC211		H-1	✱Q129		C-2	✱Q715		A-6			
IC212		J-2	✱Q130		C-2	✱Q716		A-6			
IC213		P-1	✱Q131		B-5	✱Q717		A-4			
IC214		M-2	✱Q132		C-5	Q801	N	A-2			
IC215		P-2	✱Q133		A-2	Q802	N	A-2			
IC216		K-2	✱Q201		C-1	Q803	N	A-2			
IC217	N	K-1	✱Q202		H-1	Q804	N	D-3			
IC218		K-2	✱Q203		H-4						
IC219	N	J-1	✱Q204		P-2	RV101		B-2			
IC220		M-2	✱Q207		R-2	RV102		B-3			
IC301		E-4	✱Q209		N-2	RV103		C-4			
IC302		H-3	✱Q210		R-2	RV104		C-3			
IC303		E-5	✱Q211		K-2	RV105		A-2			
IC304		E-5	✱Q212		R-1	RV201		P-1			
IC305		F-4	✱Q213		M-3	RV202		N-1			
IC306		K-4	✱Q301		D-3	RV203		M-1			
IC307		F-3	✱Q303		E-3	RV301		E-3			
IC308		J-3	✱Q305		E-3	RV302		K-1			
IC309		J-3	✱Q306		E-3	RV303		L-1			
IC310		G-3	✱Q307		E-3	RV304		L-1			
IC311		J-4	✱Q308		J-4	RV305		L-1			
IC312		L-2	✱Q309		J-4	RV306		K-5			
IC313		G-5	✱Q310		F-3	RV501		R-1			
IC314		L-1	✱Q311		F-3	RV502		R-4			
IC315		K-5	✱Q312		K-3	RV503		R-4			
IC316		H-4	✱Q313		E-4	RV602		M-4			
IC317		F-3	✱Q314		E-4	RV603		M-4			
IC501		P-4	✱Q315		J-3	RV701		A-4			

✱ : B SIDE
N : UVW-1400 ONLY
P : UVW-1400P ONLY

VRA-5A/5AP ; Y/C REC PROCESS(DECODE, MOD), CTDM(COMPRESS)

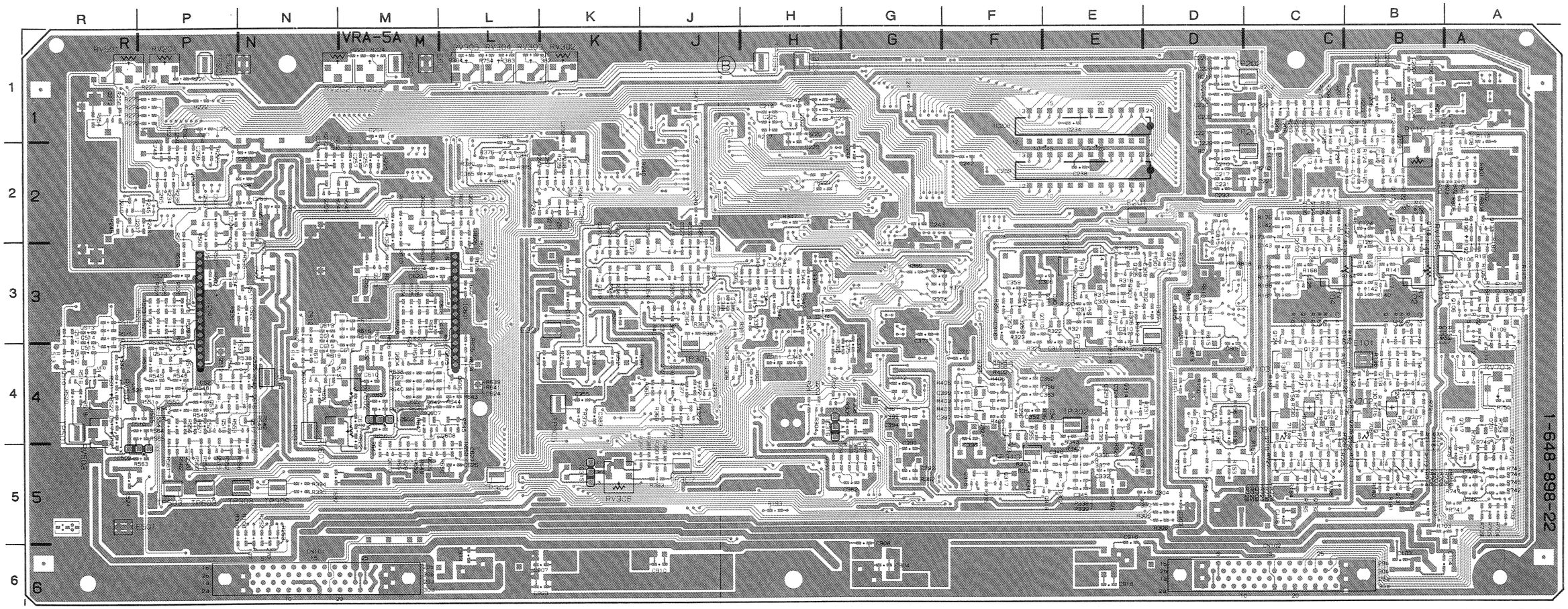

VRA-5A 1-648-898-22 B SIDE

VRA-5A/5AP(1-648-898-22)

CN101		N-6	IC502		R-5	✱Q316		F-5	RV702		B-4
CN102		C-6	IC601		L-4	✱Q317		F-5	RV703		C-4
			IC602		M-4	✱Q318		E-5			
CV301		F-5	IC701		A-4	✱Q319		K-3	S201		H-4
			IC702		A-5	✱Q320		J-3			
✱D101		B-3	IC703		H-2	✱Q321		J-4	TH201	N	M-1
✱D102		C-3	IC704		F-4	✱Q322		J-4			
✱D109		D-4	IC705		G-4	✱Q323		J-4	TP101		A-3
✱D202		H-4	IC706		G-4	✱Q324		F-4	TP201		C-2
✱D301		E-3	IC707		G-4	✱Q325		F-4	TP202		C-1
✱D302	P	E-5	IC801	N	D-3	✱Q508		N-2	TP301		E-3
✱D303		F-4	IC802	N	D-2	✱Q509		P-2	TP302		E-4
D305		F-5	IC901		K-6	✱Q510		R-4	TP303		H-1
D306		J-3	IC902		G-6	✱Q511		N-3	TP304		L-5
✱D701		A-4	IC903		J-6	✱Q512		P-4	TP305		K-4
D801	N	A-2	IC904		E-6	✱Q513		P-4	TP306		J-4
						✱Q514		P-4	TP307		J-5
E101		B-4	LV301		E-4	✱Q515		P-4	TP308		N-5
E201		E-2				✱Q516		N-4	TP309		N-5
E301		K-3	✱Q101		A-3	✱Q517		N-4	TP310		F-5
E302		D-3	Q102		A-5	✱Q518		P-4	TP501		R-4
E303		H-1	✱Q103		A-3	✱Q519		P-5	TP502		P-1
E501		R-5	Q104		A-4	✱Q520		P-5	TP503		P-5
E502		N-1	Q105		A-3	✱Q601		L-2	TP504		N-4
E601		M-1	✱Q106		A-3	✱Q602		M-2	TP601		N-4
			Q107		A-3	✱Q603		N-4	TP602		M-1
FB201		K-2	✱Q108		A-1	✱Q604		M-4	TP603		P-5
			✱Q109		B-2	✱Q605		M-4			
FL101		A-2	✱Q110		B-2	✱Q606		L-4	X301		F-4
FL102		B-3	✱Q111		B-1	✱Q607		M-4	X302		H-4
FL103		C-3	✱Q112		C-1	✱Q608		L-4			
FL201		R-2	✱Q113		C-2	✱Q609		M-5			
FL202		N-2	✱Q114		B-4	✱Q610		M-5			
			✱Q115		B-4	Q701		A-6			
IC101		A-3	✱Q116		B-3	Q702		A-5			
IC102		C-2	✱Q117		B-3	✱Q703		B-5			
IC103		D-4	✱Q118		B-3	Q704		B-5			
IC104		G-5	✱Q119		B-3	✱Q705		B-5			
IC201		A-1	✱Q120		B-2	✱Q706		B-5			
IC202		B-1	✱Q121		C-4	✱Q707		B-4			
IC203		A-1	✱Q122		C-4	✱Q708		C-5			
IC205		D-2	✱Q123		C-4	Q709		C-5			
IC206		D-1	✱Q124		C-3	✱Q710		C-5			
IC207		H-1	✱Q125		C-3	✱Q711		C-5			
IC208		E-1	✱Q126		C-3	✱Q712		C-4			
IC209		E-2	✱Q127		C-3	Q713		A-5			
IC210		G-2	✱Q128		C-3	Q714		A-5			
IC211		H-1	✱Q129		C-2	✱Q715		A-6			
IC212		J-2	✱Q130		C-2	✱Q716		A-6			
IC213		P-1	✱Q131		B-5	✱Q717		A-4			
IC214		M-2	✱Q132		C-5	Q801	N	A-2			
IC215		P-2	✱Q133		A-2	Q802	N	A-2			
IC216		K-2	✱Q201		C-1	Q803	N	A-2			
IC217	N	K-1	✱Q202		H-1	Q804	N	D-3			
IC218		K-2	✱Q203		H-4						
IC219	N	J-1	✱Q204		P-2	RV101		B-2			
IC220		M-2	✱Q207		R-2	RV102		B-3			
IC301		E-4	✱Q209		N-2	RV103		C-4			
IC302		H-3	✱Q210		R-2	RV104		C-3			
IC303		E-5	✱Q211		K-2	RV105		A-2			
IC304		E-5	✱Q212		R-1	RV201		P-1			
IC305		F-4	✱Q213		M-3	RV202		N-1			
IC306		K-4	✱Q301		D-3	RV203		M-1			
IC307		F-3	✱Q303		E-3	RV301		E-3			
IC308		J-3	✱Q305		E-3	RV302		K-1			
IC309		J-3	✱Q306		E-3	RV303		L-1			
IC310		G-3	✱Q307		E-3	RV304		L-1			
IC311		J-4	✱Q308		J-4	RV305		L-1			
IC312		L-2	✱Q309		J-4	RV306		K-5			
IC313		G-5	✱Q310		F-3	RV501		R-1			
IC314		L-1	✱Q311		F-3	RV502		R-4			
IC315		K-5	✱Q312		K-3	RV503		R-4			
IC316		H-4	✱Q313		E-4	RV602		M-4			
IC317		F-3	✱Q314		E-4	RV603		M-4			
IC501		P-4	✱Q315		J-3	RV701		A-4			

✱ : B SIDE
N : UVW-1400 ONLY
P : UVW-1400P ONLY

CL-29 ; CASSETTE LOADING BEGIN/NEAR-END SENSOR
HP-61 ; HEADPHONES JACK/VOLUME CONTROL
PC-70 ; CASSETTE IN/LARGE CASSETTE SENSOR
PD-35 ; PINCH SOLENOID

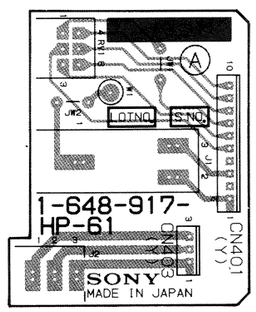

HP-61 1-648-917-11,12 A SIDE

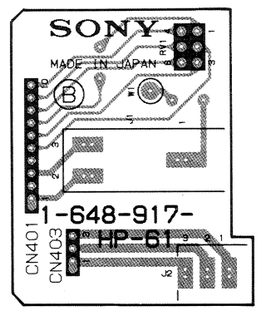

HP-61 1-648-917-11,12 B SIDE

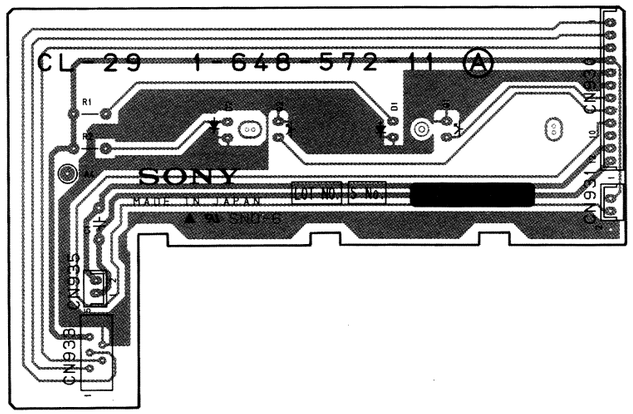

CL-29 1-648-572-11 A SIDE

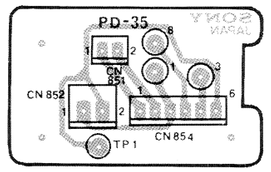

PD-35 1-622-596-11 A SIDE

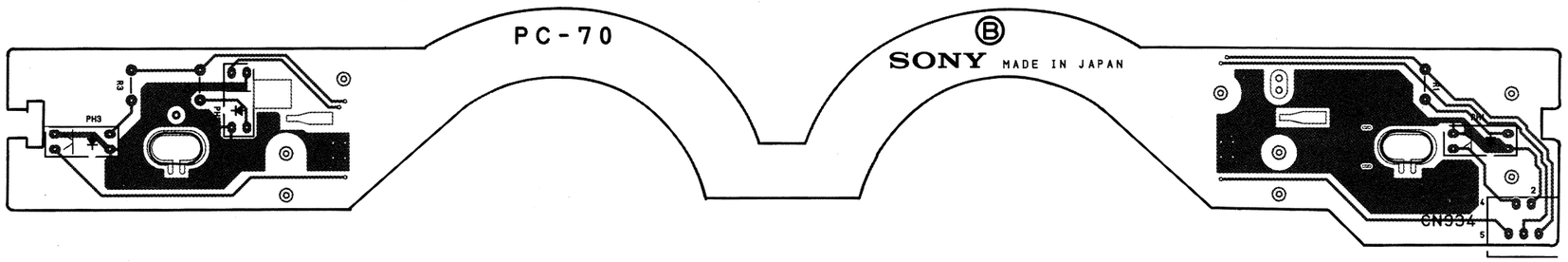

PC-70 1-648-571-11 B SIDE

Frame (2) PTC, RM, SE, TR, VR

PTC-66 ; REEL POSITION
PTC-67 ; THREADING FG/MOTOR
PTC-68 ; THREAD END/UNTHREAD END SENSOR
RM-126 ; S-REEL MOTOR
RM-127 ; T-REEL MOTOR
SE-207 ; REEL FG
TR-84 ; S-TENSION SENSOR
VR-155 ; AUDIO REC LEVEL

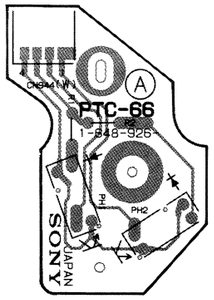

PTC-66 1-648-926-11,12 A SIDE

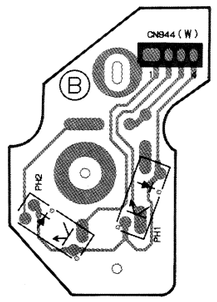

PTC-66 1-648-926-11,12 B SIDE

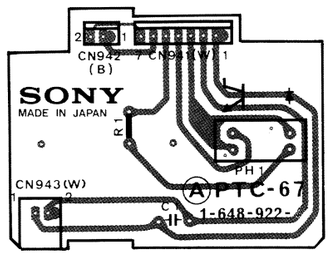

PTC-67 1-648-922-11,12 A SIDE

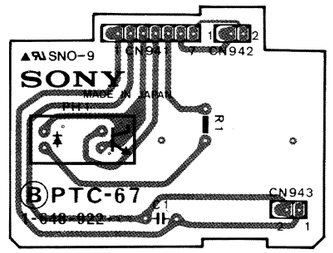

PTC-67 1-648-922-11,12 B SIDE

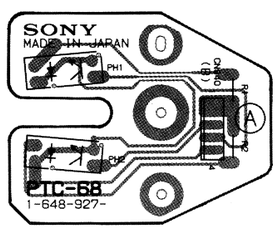

PTC-68 1-648-927-11,12 A SIDE

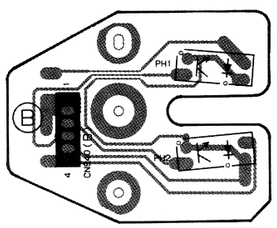

PTC-68 1-648-927-11,12 B SIDE

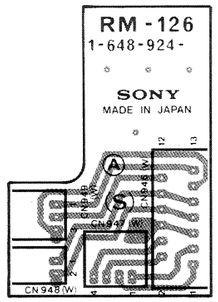

RM-126 1-648-924-11,12 A SIDE

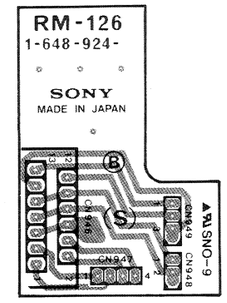

RM-126 1-648-924-11,12 B SIDE

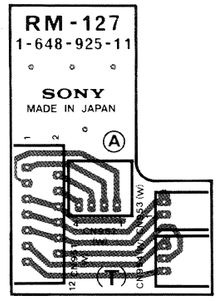

RM-127 1-648-925-11 A SIDE

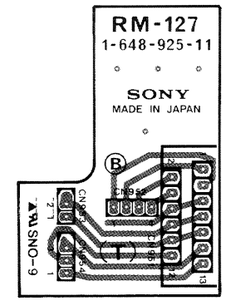

RM-127 1-648-925-11 B SIDE

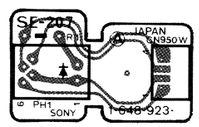

SE-207 1-648-923-11,12 A SIDE

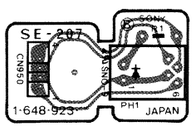

SE-207 1-648-923-11,12 B SIDE

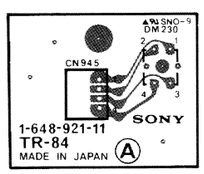

TR-84 1-648-921-11 A SIDE

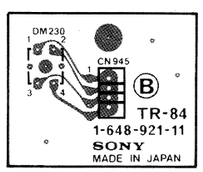

TR-84 1-648-921-11 B SIDE

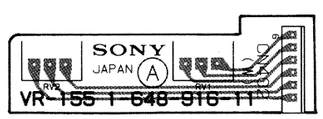

VR-155 1-648-916-11 A SIDE

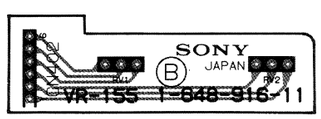

VR-155 1-648-916-11 B SIDE

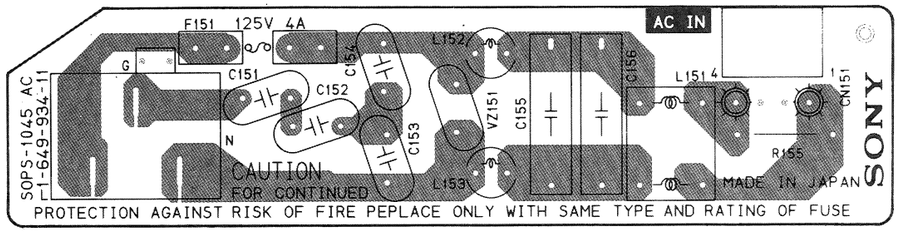

SOPS-1045 AC 1-649-934-11 A SIDE

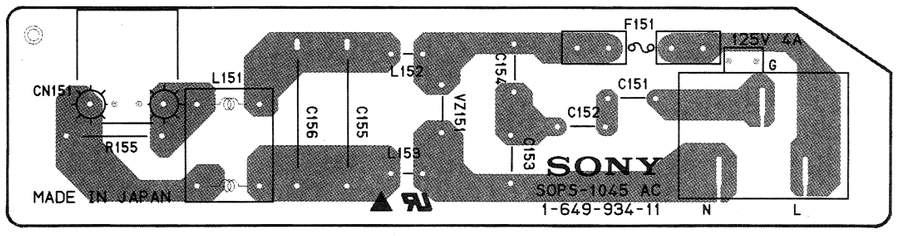

SOPS-1045 AC 1-649-934-11 B SIDE

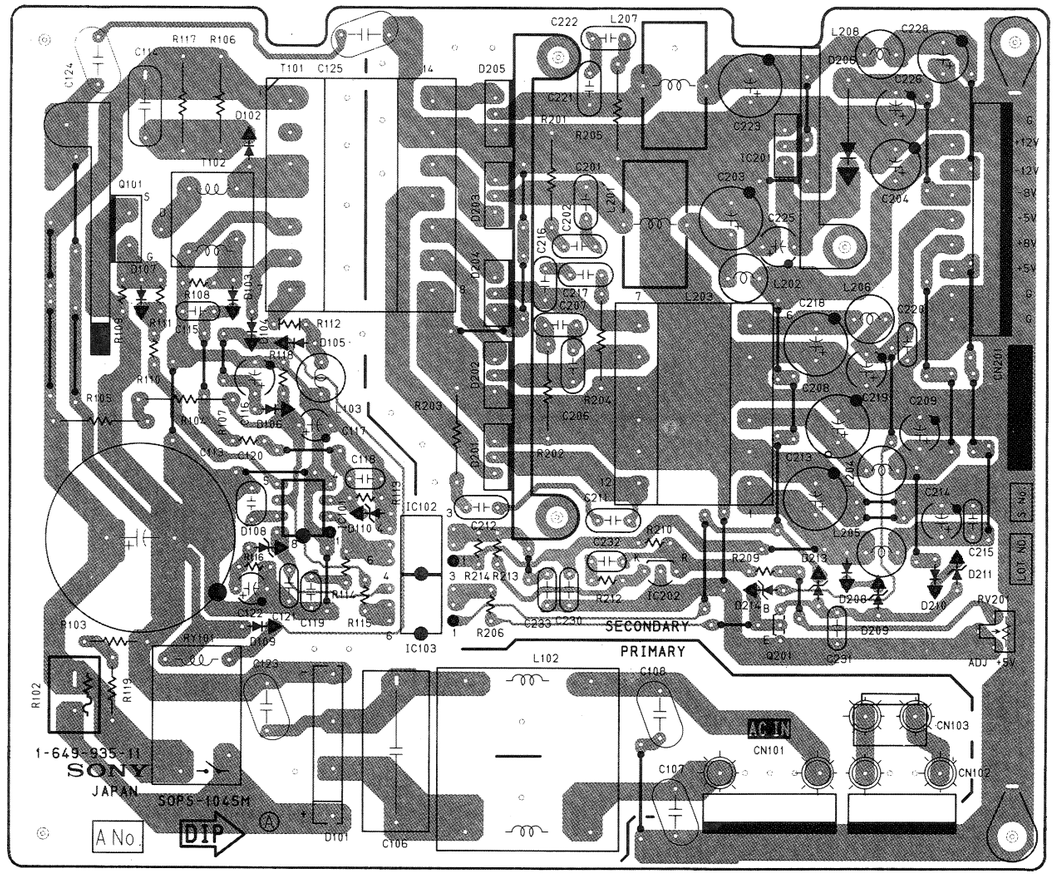

SOPS-1045 M, SOPS-1046 M A SIDE

MB-520/520P ; MOTHER BOARD

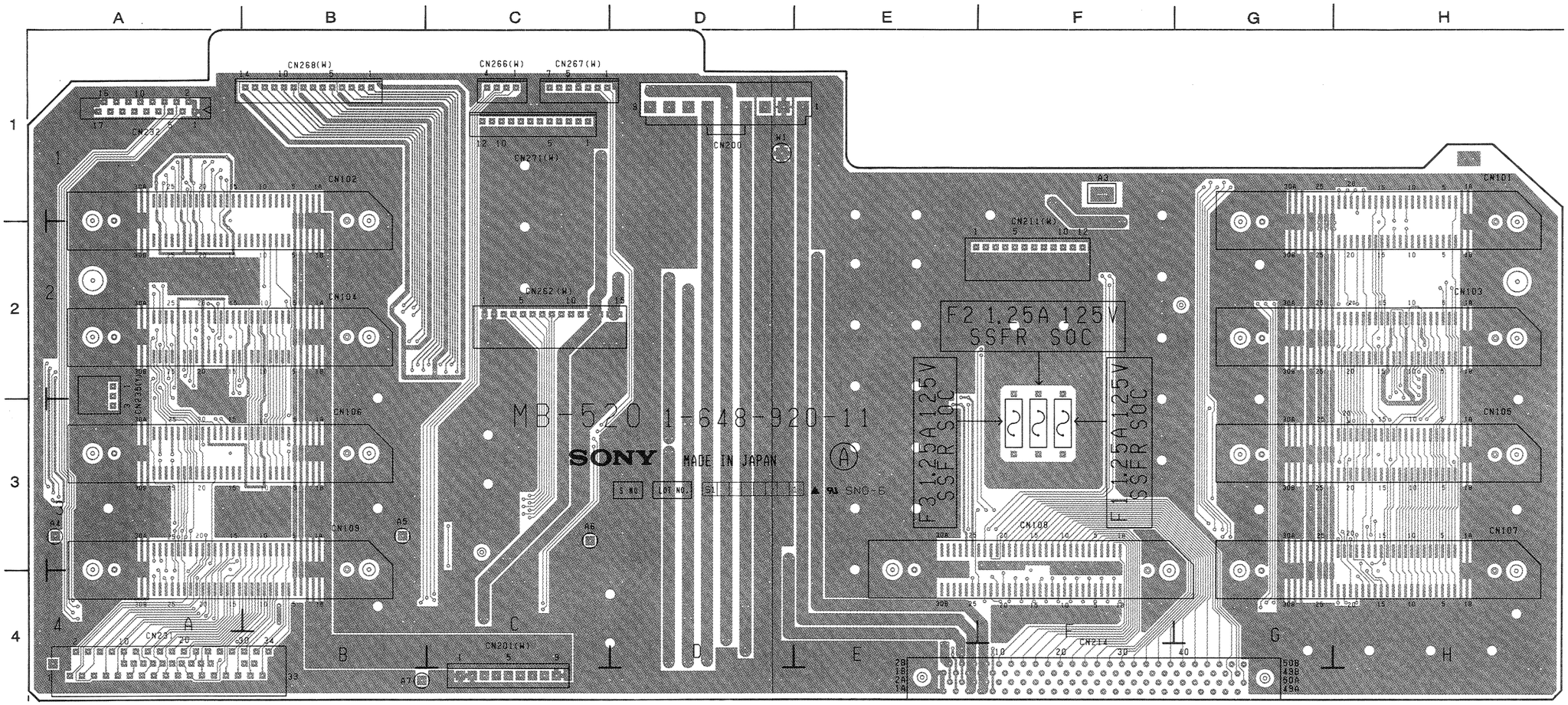

MB-520 1-648-920-11 A SIDE

MB-520/520P(1-648-920-11)

CN101	H-1
CN102	B-1
CN103	H-2
CN104	B-2
CN105	H-3
CN106	B-3
CN107	H-3
CN108	F-3
CN109	B-3
CN200	D-1
CN201	C-4
CN211	F-2
CN214	F-4
CN231	A-4
CN232	A-1
CN235	A-2
CN262	C-2
CN266	C-1
CN267	C-1
CN268	B-1
CN271	C-1
PS1	P F-3
PS2	P F-3
PS3	P F-3

P : UVW-1400P ONLY

MB-520/520P ; MOTHER BOARD

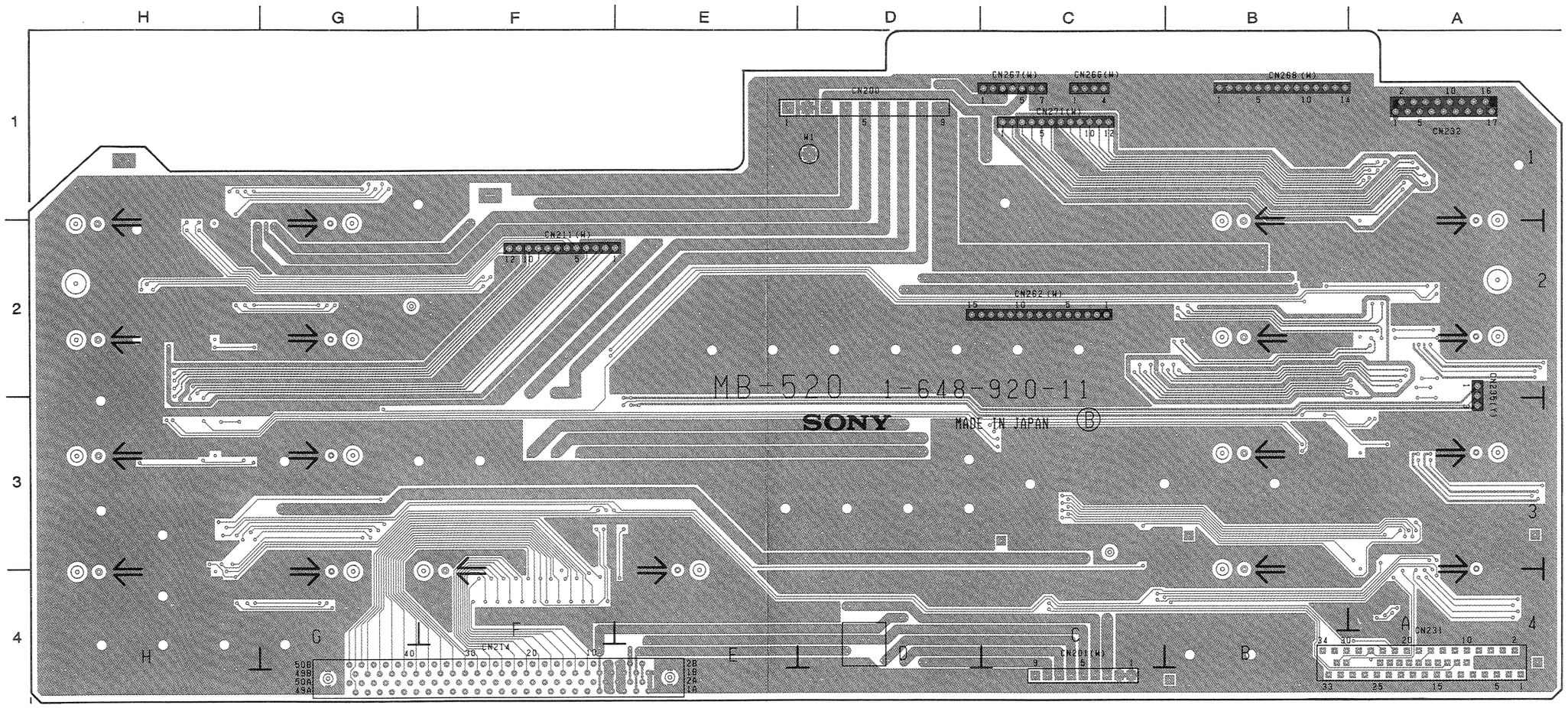

MB-520 1-648-920-11 B SIDE

MB-520/520P(1-648-920-11)

CN101	H-1
CN102	B-1
CN103	H-2
CN104	B-2
CN105	H-3
CN106	B-3
CN107	H-3
CN108	F-3
CN109	B-3
CN200	D-1
CN201	C-4
CN211	F-2
CN214	F-4
CN231	A-4
CN232	A-1
CN235	A-2
CN262	C-2
CN266	C-1
CN267	C-1
CN268	B-1
CN271	C-1
PS1	P F-3
PS2	P F-3
PS3	P F-3

P : UVW-1400P ONLY

MB-520A/520AP ; MOTHER BOARD

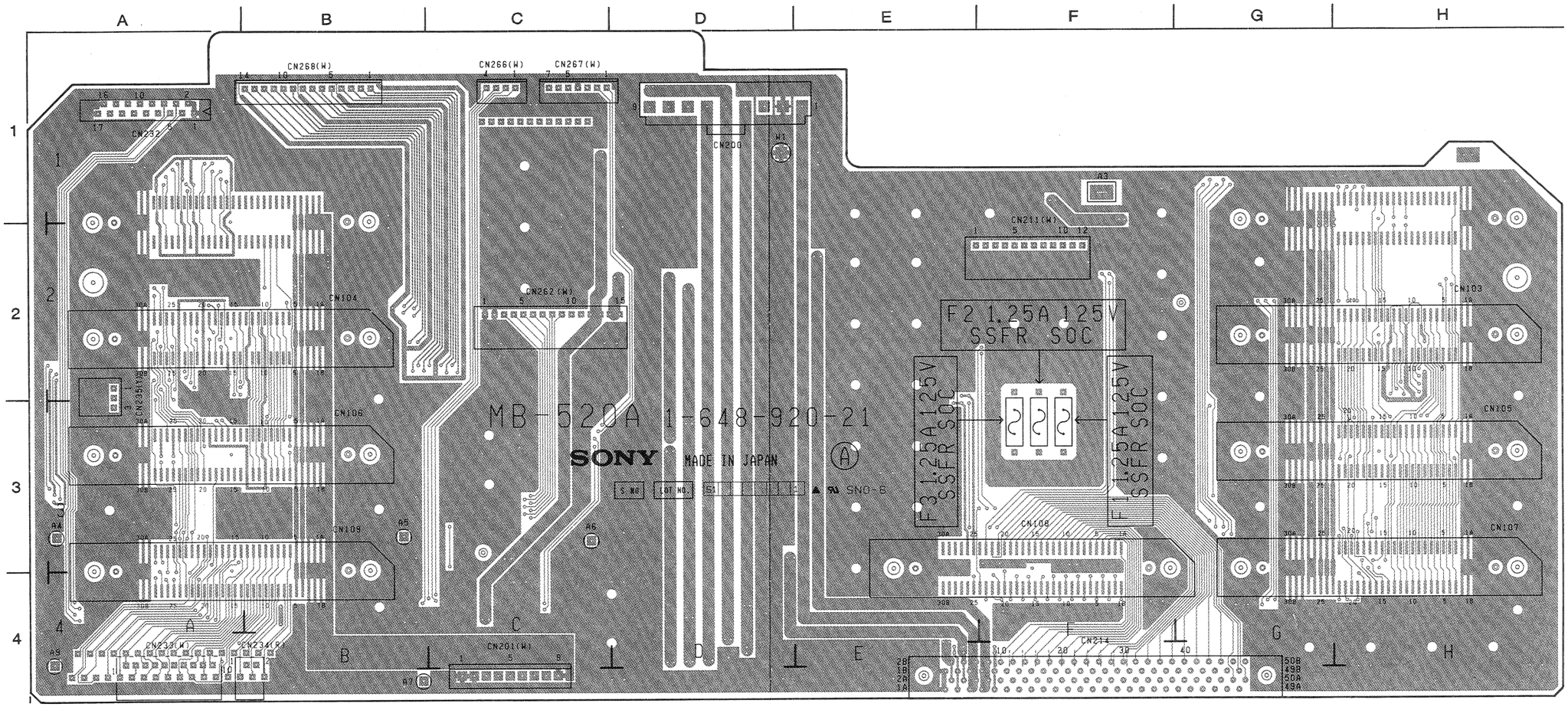

MB-520A 1-648-920-21 A SIDE

MB-520A/520AP(1-648-920-21)

CN103	H-2
CN104	B-2
CN105	H-3
CN106	B-3
CN107	H-3
CN108	F-3
CN109	B-3
CN200	D-1
CN201	C-4
CN211	F-2
CN214	F-4
CN232	A-1
CN233	A-4
CN234	B-4
CN235	A-2
CN262	C-2
CN266	C-1
CN267	C-1
CN268	B-1
PS1	P F-3
PS2	P F-3
PS3	P F-3

P : UVW-1200P ONLY

MB-520A/520AP ; MOTHER BOARD

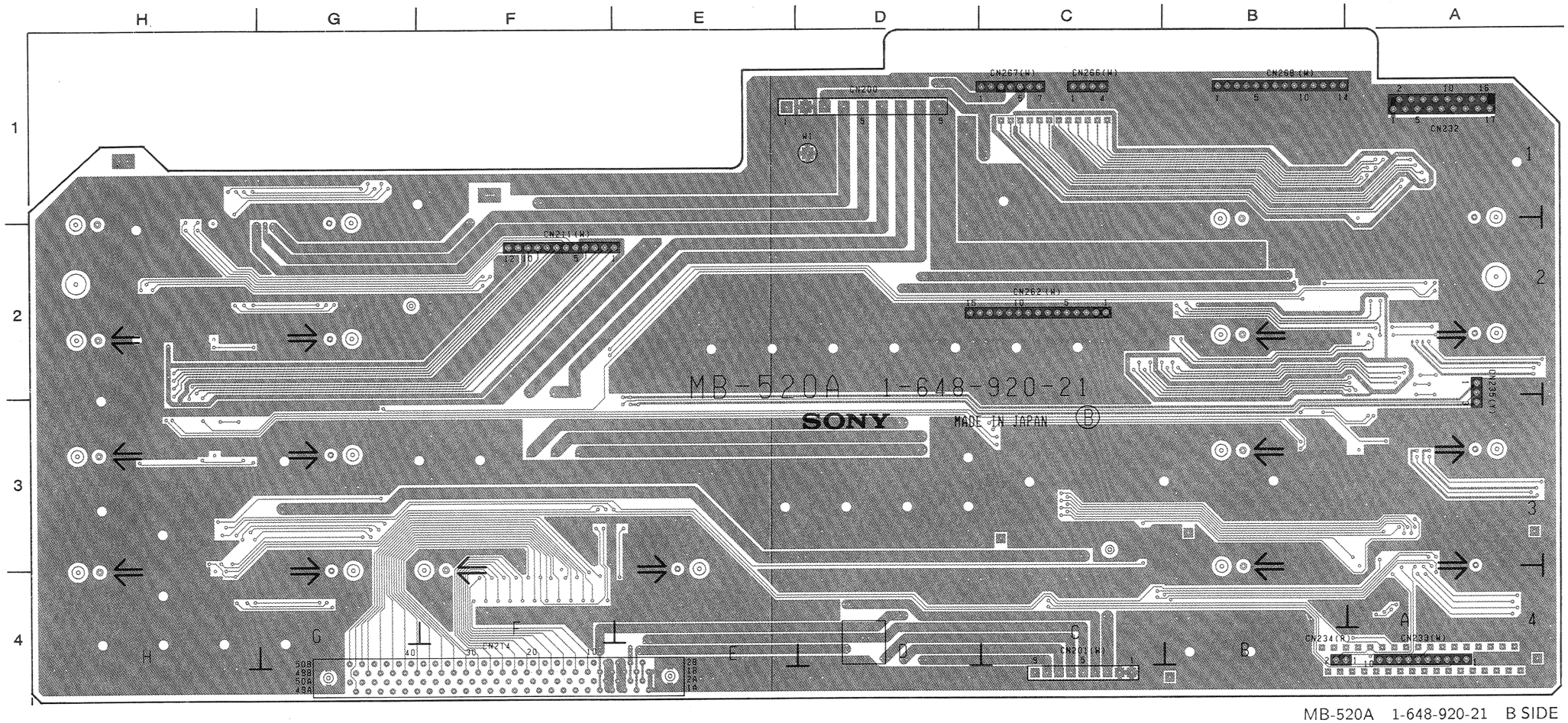

MB-520A 1-648-920-21 B SIDE

MB-520A/520AP(1-648-920-21)

CN103	H-2
CN104	B-2
CN105	H-3
CN106	B-3
CN107	H-3
CN108	F-3
CN109	B-3
CN200	D-1
CN201	C-4
CN211	F-2
CN214	F-4
CN232	A-1
CN233	A-4
CN234	B-4
CN235	A-2
CN262	C-2
CN266	C-1
CN267	C-1
CN268	B-1
PS1	P F-3
PS2	P F-3
PS3	P F-3

P : UVW-1200P ONLY

MB-471B ; MOTHER BOARD

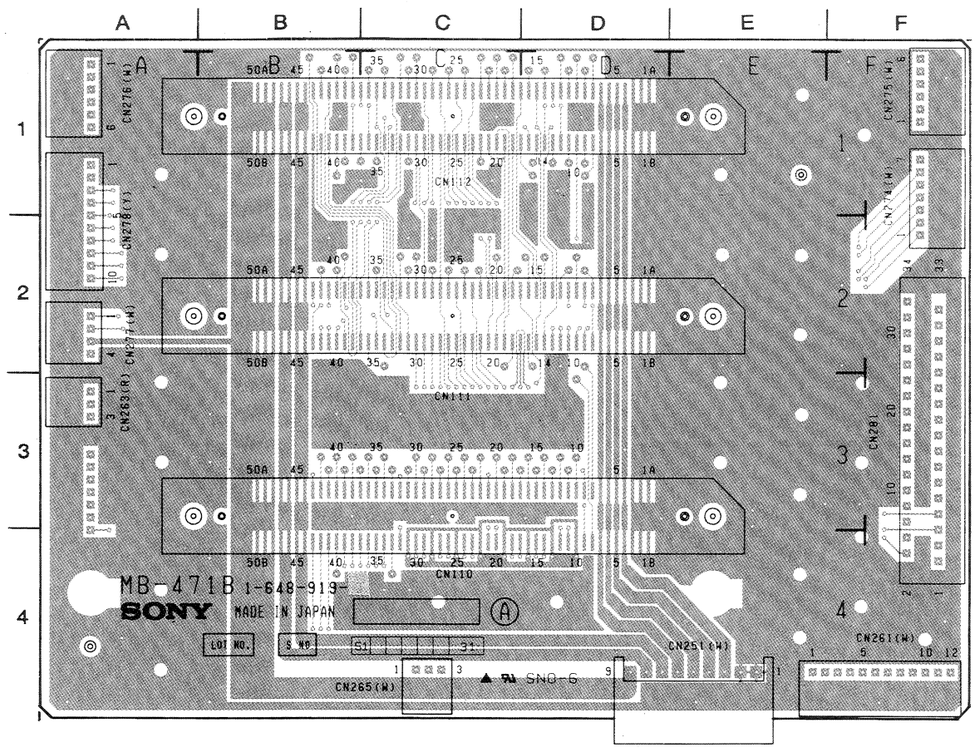

MB-471B 1-648-919-31,32 A SIDE

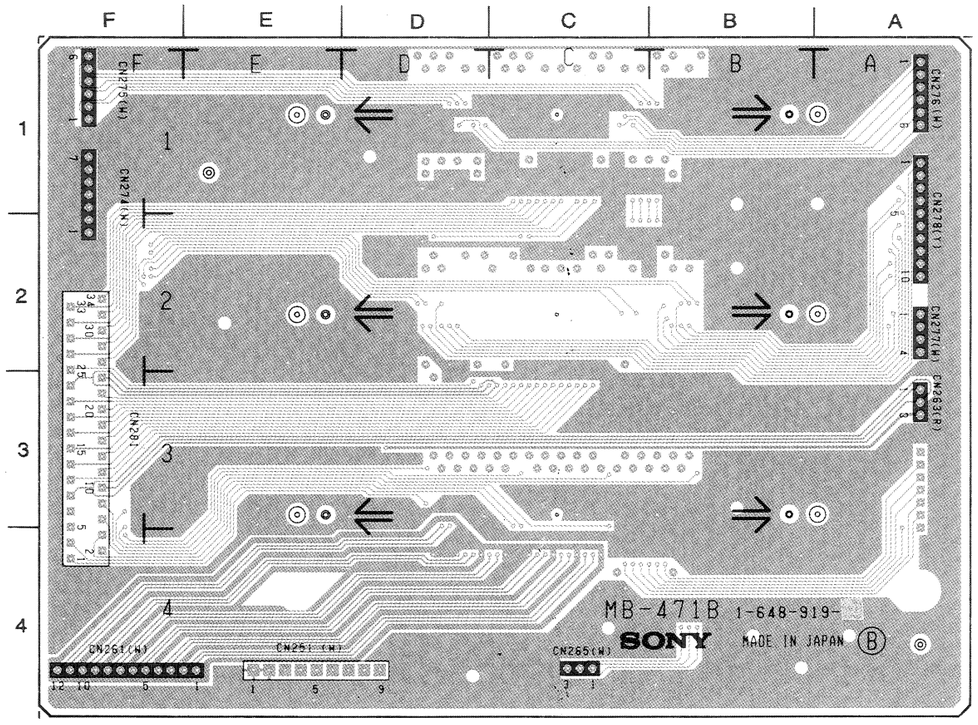

MB-471B 1-648-919-31,32 B SIDE

MB-471B (1-648-919-31,32)

CN110	C-4
CN111	C-3
CN112	C-1
CN251	E-4
CN261	F-4
CN263	A-3
CN265	C-4
CN274	F-1
CN275	F-1
CN276	A-1
CN277	A-2
CN278	A-2
CN281	F-3

Section 16
Schematic Diagrams

SCHEMATIC DIAGRAM INDEX

	Board		Page
A	AP-31B/31BP	(UVW-1400/1400P)	16-5
	AP-34/34P	(UVW-1200/1200P)	16-15
	AR-14A/14AP	(UVW-1400/1400P)	16-22
C	CP-225B/225C		16-30
	CP-226/226A/226J/226AJ		16-31
D	DR-214		16-32
K	KY-290	(UVW-1400/1400P)	16-36
	KY-290A	(UVW-1200/1200P)	16-38
M	MS-39/39A		16-40
	MB-471B	(UVW-1400/1400P)	16-106
	MB-520/520A/520P/520AP		16-110
R	RP-70B/70BP	(UVW-1400/1400P)	16-42
S	SS-53A		16-46
	SOPS-1045/1046		16-104, 105
T	TBC-28/28P		16-57
V	VP-44/44A/44P/44AP		16-72
	VRA-5A/5AP	(UVW-1400/1400P)	16-91
FRAME WIRING			16-161

NOTE; The ⚠ -marked components are critical to safety.
Replace only with same components as specified.

CIRCUIT FUNCTION

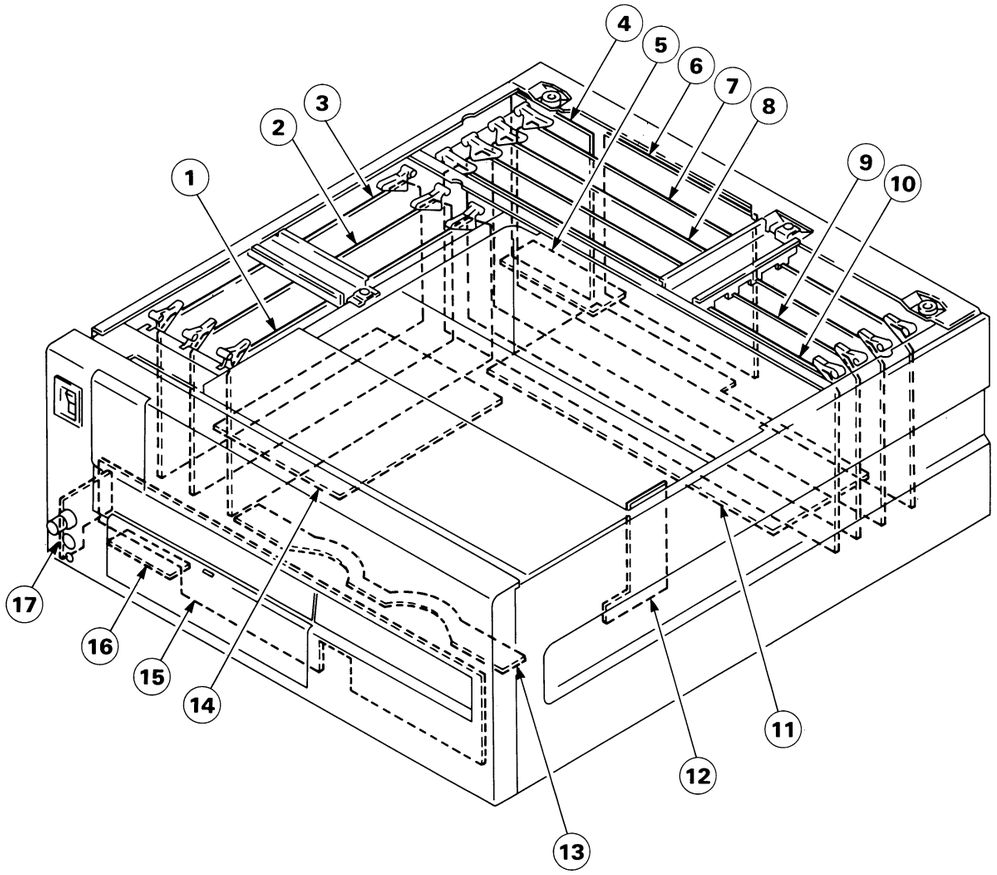

①	RP-70B/BP BOARD(UVW-1400/P)	; RF REC/PB AMP.,FULL ERASE OSC.
②	AP-31B/BP BOARD(UVW-1400/P)	; AUDIO/TC PB AMP.,METER DRIVER
	AP-34/P BOARD(UVW-1200/P)	; AUDIO/TC PB AMP.,RF HEAD AMP.
③	AR-14A/AP BOARD(UVW-1400/P)	; AUDIO/TC REC AMP.,AUDIO BIAS DRIVER
④	CP-226 BOARD(UVW-1400/P : FOR UC, EK)	; AUDIO INPUT/OUTPUT CONNECTOR, OUTPUT TRANSFORMER
	CP-226J BOARD(UVW-1400 : FOR J)	; AUDIO INPUT/OUTPUT CONNECTOR, OUTPUT TRANSFORMER
	CP-226A BOARD(UVW-1200/P : FOR UC, EK)	; AUDIO OUTPUT CONNECTOR,OUTPUT TRANSFORMER
	CP-226AJ BOARD(UVW-1200 : FOR J)	; AUDIO OUTPUT CONNECTOR,OUTPUT TRANSFORMER
⑤	CP-239 BOARD	; 25P REMOTE CONNECTOR
⑥	CP-225B BOARD(UVW-1400/P)	; VIDEO INPUT/OUTPUT CONNECTOR
	CP-225C BOARD(UVW-1200/P)	; VIDEO OUTPUT CONNECTOR
⑦	VRA-5A/AP BOARD(UVW-1400/P)	; Y/C REC PROCESS(DECODE,MOD),CTDM(COMPRESS)
⑧	VP-44/P BOARD(UVW-1400/P)	; Y/C PB PROCESS(PB RF EQ,DEMOD.,Y-RF ENVELOPE DET),VIDEO OUTPUT DRIVER, ENCODE, SYNC/CHARA MIX
	VP-44A/AP BOARD(UVW-1200/P)	; Y/C PB PROCESS(PB RF EQ,DEMOD.,Y-RF ENVELOPE DET),VIDEO OUTPUT DRIVER, ENCODE, SYNC/CHARA MIX
⑨	TBC-28/P BOARD	; TIME BASE CORRECTOR,CTDM(EXPAND)
⑩	SS-53A BOARD	; SYSTEM CONTROL,SERVO SYSTEM MAIN,TIME CODE GENERATOR/READER, CHARACTER GENERATOR
⑪	MB-520/P BOARD(UVW-1400/P)	; MOTHER BOARD
	MB-520A/AP BOARD(UVW-1200/P)	; MOTHER BOARD
⑫	CL-29 BOARD (CASSETTE COMPARTMENT)	; CASSETTE LOADING BEGIN/NEAR-END SENSOR
⑬	PC-70 BOARD (CASSETTE COMPARTMENT)	; CASSETTE IN/LARGE CASSETTE SENSOR
⑭	MB-471B BOARD(UVW-1400/P)	; MOTHER BOARD
⑮	KY-290 BOARD(UVW-1400/P)	; FUNCTION KEY, FL DISPLAY
	KY-290A BOARD(UVW-1200/P)	; FUNCTION KEY, FL DISPLAY
⑯	VR-155 BOARD (UVW-1400/P)	; AUDIO REC LEVEL
⑰	HP-61 BOARD	; HEADPHONES JACK/VOLUME CONTROL

16-2

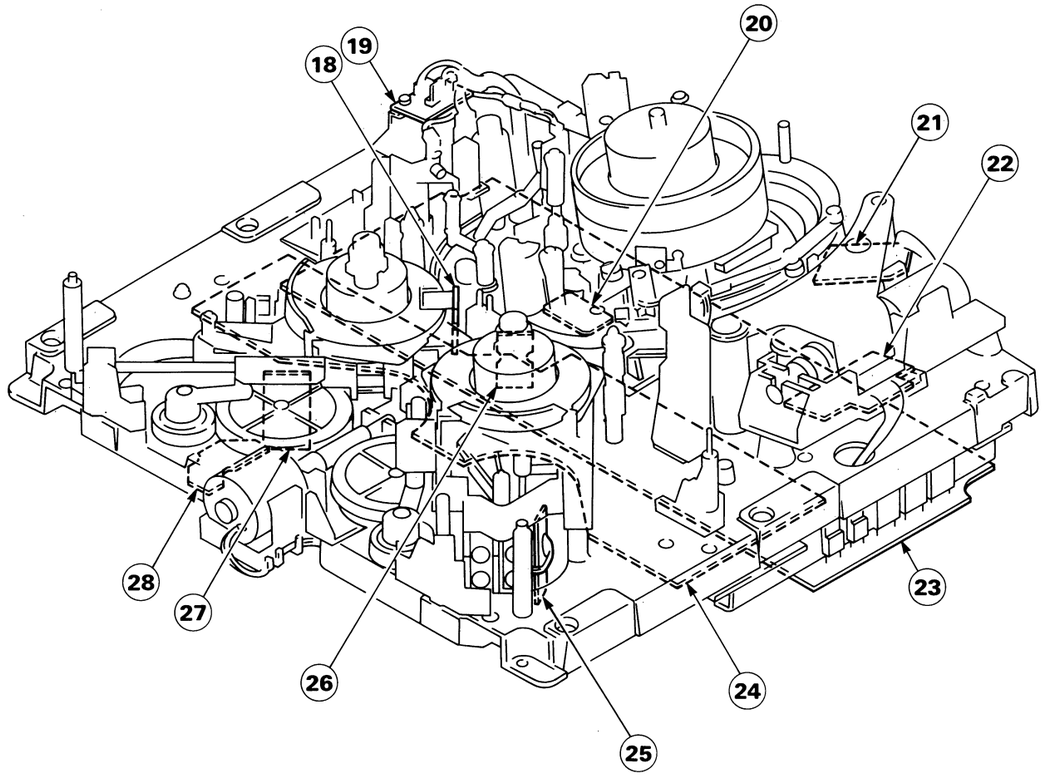

⑱	SE-207 BOARD(S SIDE)	; REEL FG
⑲	PD-35 BOARD	; PINCH SOLENOID
⑳	TR-84 BOARD	; S-TENSION SENSOR
㉑	PTC-68 BOARD	; THREAD END/UNTHREAD END SENSOR
㉒	PTC-67 BOARD	; THREADING FG/MOTOR
㉓	DR-214 BOARD	; MOTOR DRIVER,TENSION SENS. AMP., DRUM FG/PG AMP., CAPSTAN FG AMP., CTL, REC/PB AMP.
㉔	MS-39 BOARD(UVW-1400/P)	; CASSETTE INFORMATION,SOLENOID DRIVER,MECHA. CONTROL MPU, DATA STORAGE
	MS-39A BOARD(UVW-1200/P)	; CASSETTE INFORMATION,SOLENOID DRIVER,MECHA. CONTROL MPU, DATA STORAGE
㉕	RM-127 BOARD	; T-REEL MOTOR
㉖	SE-207 BOARD(T SIDE)	; REEL FG
㉗	RM-126 BOARD	; S-REEL MOTOR
㉘	PTC-66 BOARD	; REEL POSITION SENSOR

AP-31B/BP (1-648-906-11,12)

CN1	H-1	FS40	C-2	FS121	G-5	Q2	H-2	✱TH1	J-2
CN2	A-1	FS41	D-2	FS122	G-5	Q3	H-2	✱TH2	B-2
CN3	G-4	FS43	C-2	FS123	H-5	✱Q4	J-2		
CN111	E-5	FS44	D-2	FS124	H-5	✱Q5	J-2	TP1	H-1
		FS45	D-2	FS125	H-1	✱Q6	J-2	TP2	J-1
✱D1	J-2	FS46	D-2	FS126	J-1	✱Q7	J-2	TP3	J-2
✱D2	H-3	FS47	C-3	FS127	J-1	✱Q8	H-3	TP4	G-2
✱D3	H-4	FS48	C-3	FS128	J-1	✱Q9	H-4	TP5	G-1
✱D5	G-3	FS49	C-3	FS129	H-2	✱Q10	H-4	TP201	A-1
✱D6	G-3	FS50	C-3	FS130	J-2	✱Q11	C-2	TP202	A-1
✱D7	J-5	FS51	C-3	FS131	J-2	✱Q12	E-2	TP203	B-2
✱D8	H-5	FS52	D-3	FS132	J-2	✱Q13	E-1	TP204	C-2
✱D10	G-5	FS53	C-3	FS133	J-3	✱Q14	G-3	TP205	D-1
✱D11	E-3	FS54	C-4	FS134	J-3	✱Q15	F-3	TP401	G-4
✱D12	F-3	FS55	C-4	FS135	J-3	✱Q16	F-3	TP402	G-5
✱D13	F-3	FS56	D-4	FS136	H-3	✱Q17	F-2	TP403	D-1
✱D15	E-3	FS57	D-4	FS137	J-3	Q18	J-5		
✱D16	E-3	FS58	C-4	FS138	J-3	Q19	J-5		
✱D17	J-2	FS59	C-4	FS139	H-3	Q20	H-5		
✱D18	H-2	FS61	D-4	FS140	J-3	Q21	H-5		
✱D201	A-2	FS63	D-4	FS141	J-3	✱Q22	J-4		
✱D202	C-3	FS64	B-4	FS142	J-4	✱Q23	H-4		
✱D203	C-4	FS65	D-5	FS143	J-4	Q25	G-4		
✱D204	D-3	FS66	D-5	FS144	J-4	✱Q26	E-3		
✱D205	D-3	FS67	D-5	FS145	J-4	✱Q27	D-4		
✱D206	A-5	FS68	E-5	FS146	J-4	Q28	H-3		
✱D207	B-5	FS69	C-5	FS147	J-5	Q29	A-3		
✱D209	C-4	FS70	C-5	FS148	J-5	Q30	E-3		
✱D210	B-2	FS71	E-3	FS149	J-5	✱Q34	J-2		
✱D211	A-3	FS72	E-3	FS150	H-5	✱Q35	J-2		
✱D401	F-3	FS73	F-3	FS151	H-5	✱Q36	J-2		
✱D403	F-5	FS74	E-4	FS152	H-5	✱Q201	A-1		
✱D500	D-5	FS75	E-4	FS153	G-5	Q202	A-2		
		FS76	F-4	FS154	G-5	Q203	A-2		
E1	H-4	FS77	F-4	FS155	H-5	✱Q204	B-2		
E2	G-1	FS78	E-5	FS156	H-5	✱Q205	A-2		
E201	B-4	FS79	F-5			✱Q206	A-2		
E202	E-1	FS80	F-5	IC1	J-2	✱Q207	B-2		
		FS81	H-1	IC2	J-4	✱Q208	C-3		
FS1	A-1	FS82	H-1	IC3	J-3	✱Q209	B-4		
FS3	A-2	FS83	G-1	IC4	H-3	✱Q210	B-4		
FS4	B-2	FS84	G-1	IC5	G-4	✱Q211	E-1		
FS5	B-2	FS85	G-1	IC6	G-3	✱Q212	D-3		
FS6	B-2	FS86	G-1	IC7	G-3	✱Q213	D-3		
FS7	A-3	FS87	H-1	IC8	F-2	✱Q214	D-3		
FS8	B-3	FS88	H-1	IC9	G-2	✱Q215	E-2		
FS9	B-3	FS89	H-1	IC10	G-2	Q216	A-5		
FS10	A-3	FS90	G-1	IC11	H-4	Q217	A-5		
FS11	B-3	FS91	G-1	IC12	E-5	Q218	C-5		
FS12	A-3	FS92	G-2	IC13	D-4	Q219	C-5		
FS13	A-3	FS93	G-2	IC14	E-3	✱Q220	B-4		
FS14	B-3	FS94	F-2	IC15	J-4	✱Q221	B-4		
FS15	B-3	FS96	H-2	IC201	A-2	Q223	C-4		
FS16	A-4	FS97	H-2	IC202	A-4	✱Q224	B-2		
FS17	A-4	FS98	F-2	IC203	A-3	✱Q225	B-2		
FS18	A-4	FS99	F-2	IC204	B-3	✱Q226	B-2		
FS19	B-4	FS100	G-2	IC205	C-4	✱Q401	G-4		
FS20	A-4	FS101	H-2	IC206	C-3	✱Q402	F-5		
FS21	A-4	FS102	H-2	IC207	C-3	✱Q403	F-3		
FS22	A-5	FS103	G-3	IC208	C-2				
FS23	A-5	FS104	G-3	IC209	C-2	RV1	J-1		
FS24	A-5	FS105	G-3	IC210	C-4	RV2	J-1		
FS25	B-5	FS106	H-3	IC211	A-4	RV3	J-1		
FS26	A-5	FS107	H-3	IC401	F-4	RV4	H-1		
FS27	B-5	FS108	H-3	IC402	F-4	RV5	H-1		
FS28	B-5	FS109	H-3	✱IC405	C-5	RV201	B-1		
FS29	B-5	FS110	G-3	✱IC406	D-5	RV202	B-1		
FS30	C-1	FS111	G-4	✱IC407	D-5	RV203	B-1		
FS31	C-1	FS112	G-4	✱IC408	C-5	RV204	C-1		
FS32	C-1	FS113	G-4	✱IC409	D-5	RV205	C-1		
FS33	C-1	FS114	H-4	IC410	F-5				
FS34	C-1	FS115	H-4			S1	J-1		
FS35	C-1	FS116	G-4	PS1	G-5	S2	G-1		
FS36	D-1	FS117	H-4	PS2	G-5	S201	A-1		
FS38	C-2	FS118	H-4			S202	C-1		
FS39	C-2	FS119	H-5	✱Q1	H-1				

✱ : B SIDE

AP-31B/31BP (1/3)

UVW-1400(J)	:Serial	No.	10001	through	10420
UVW-1400(UC)	:Serial	No.	10001	through	11050
UVW-1400P(EK)	:Serial	No.	10001	through	11490

AP-31B/31BP(1/3);CH-1 PB EQ/NR, LINE/METER/HP DRIVE

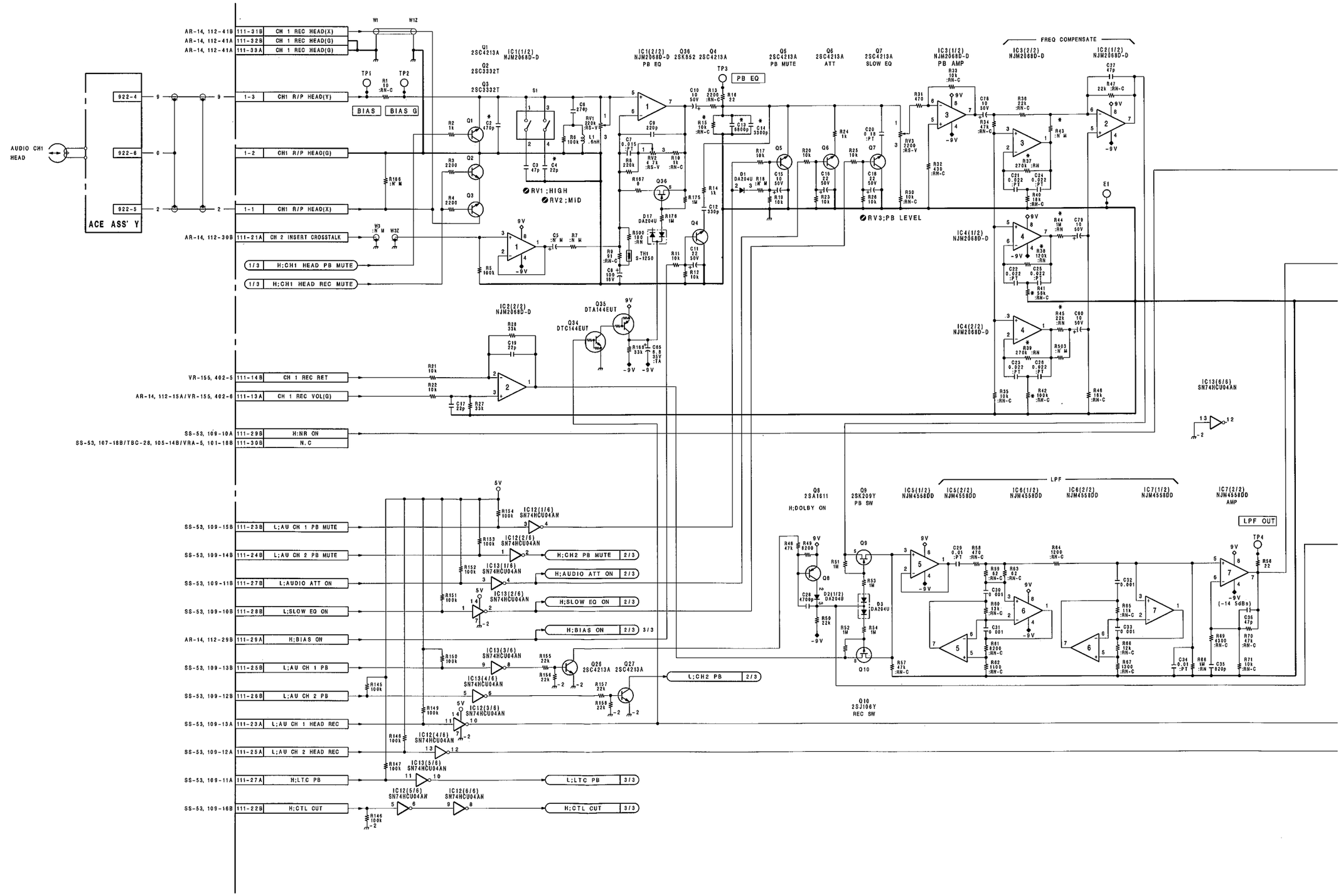

16-6 (a)

AP-31B/31BP (1/3)

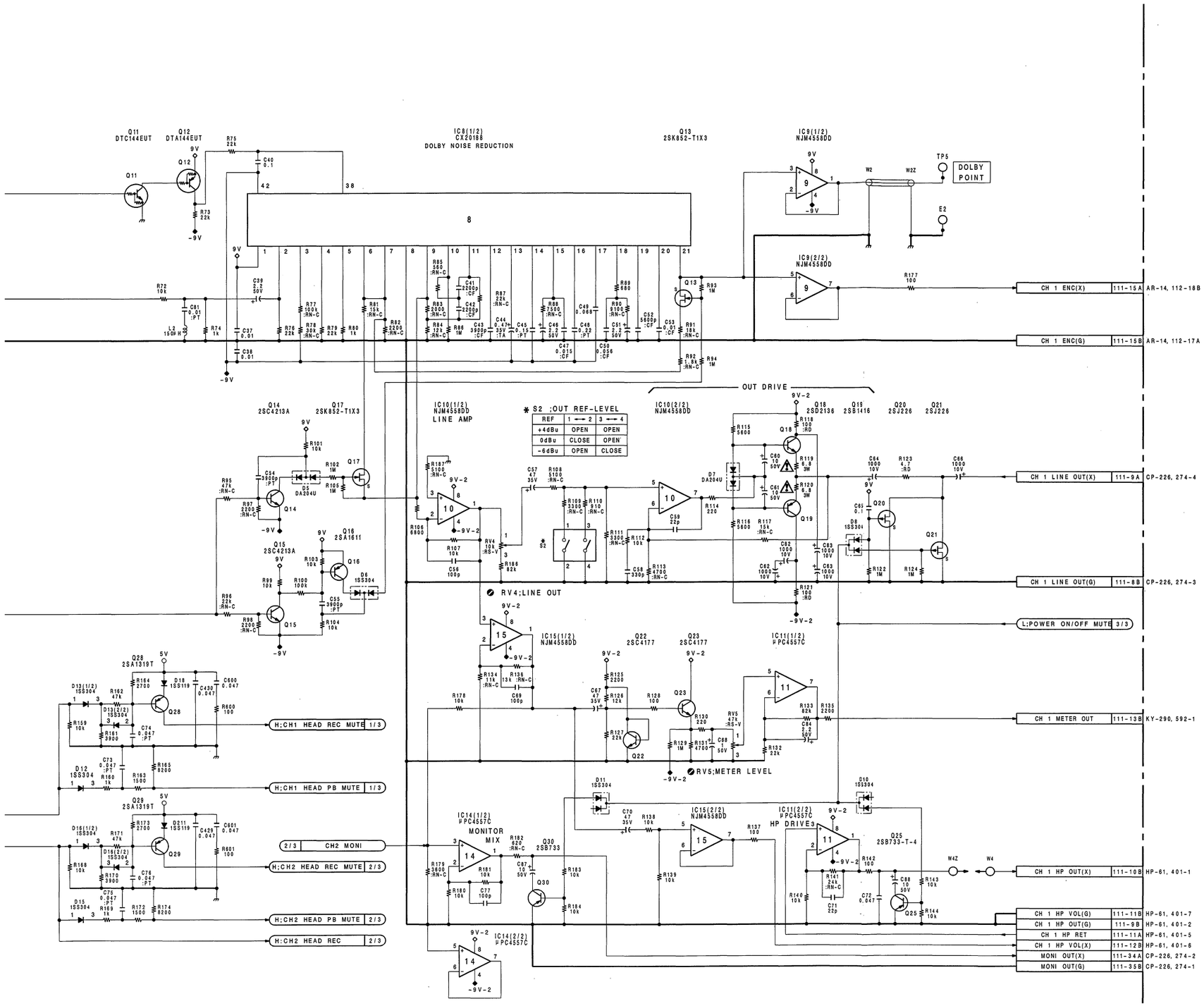

*	UVW-1400	
	J, UC	EK
C2	150P	470P
C4	68P	22P
C13	N M	6800P
C14	N M	3300P
R15	N M	▲ 10K
R37	△ 150K	△ 270K
R38	△ 430K	△ 120K
R39	△ 430K	△ 270K
R41	▲ 15K	▲ 56K
R42	▲ 68K	▲ 100K
R43	△ 470K	N M
R44	△ 1M	△ 1M
R45	△ 62K	△ 22K

△ =:RN ▲ =:RN-C

AP-31B/31BP BOARD (1/3)

BOARD NO. 1-648-906-11
UVW-1400 (J) ;#10001-10420
UVW-1400 (UC) ;#10001-11050
UVW-1400P (EK) ;#10001-11490

UVW-1400/1400P
UVW-1200/1200P

16-7 (a)

16-7 (a)

AP-31B/31BP (1/3)

UVW-1400(J)	:Serial No. 10421 and higher
UVW-1400(UC)	:Serial No. 11051 and higher
UVW-1400P(EK)	:Serial No. 11491 and higher

AP-31B/31BP(1/3);CH-1 PB EQ/NR, LINE/METER/HP DRIVE

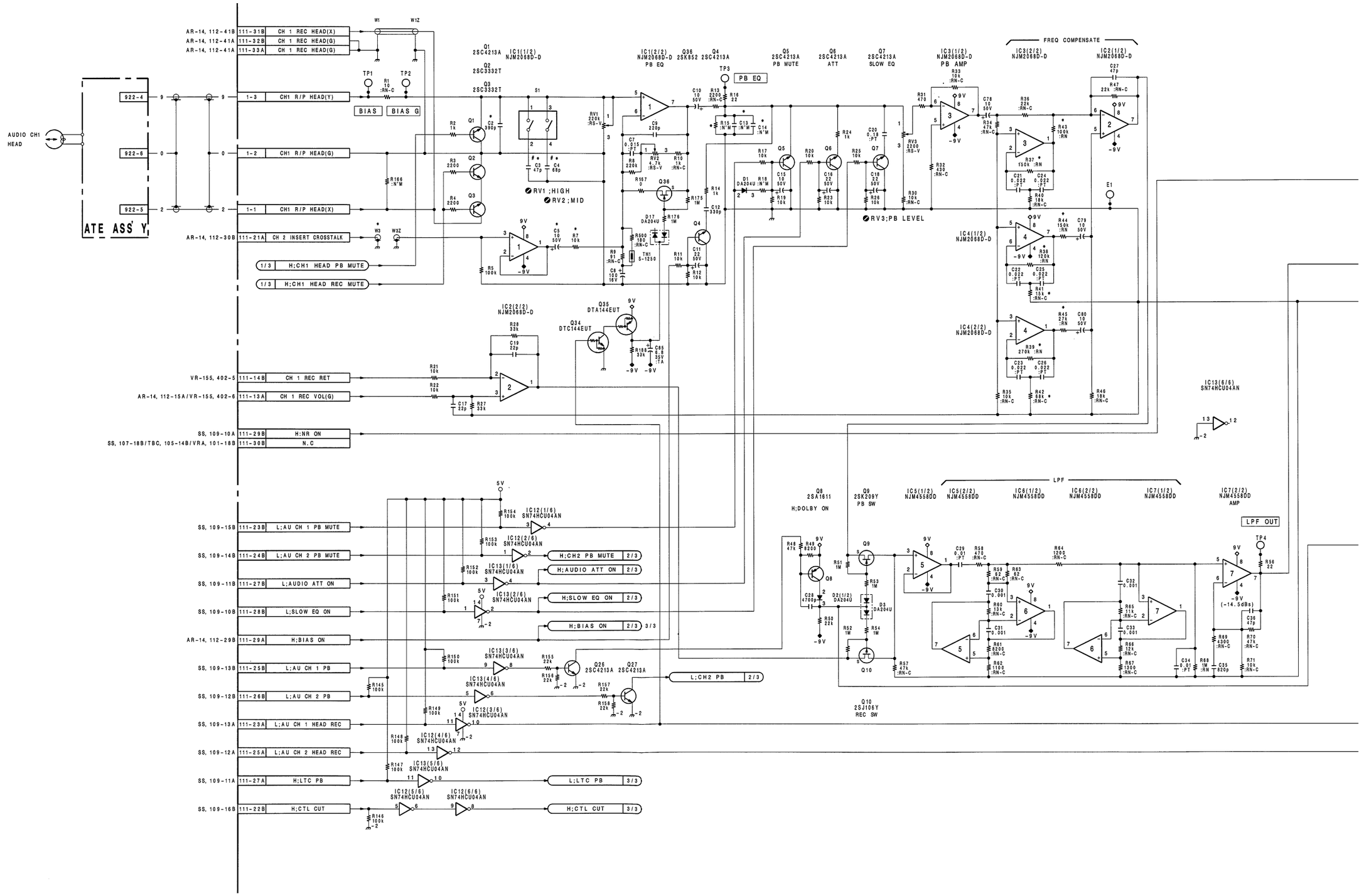

16-6 (b)

AP-31B/31BP (1/3)

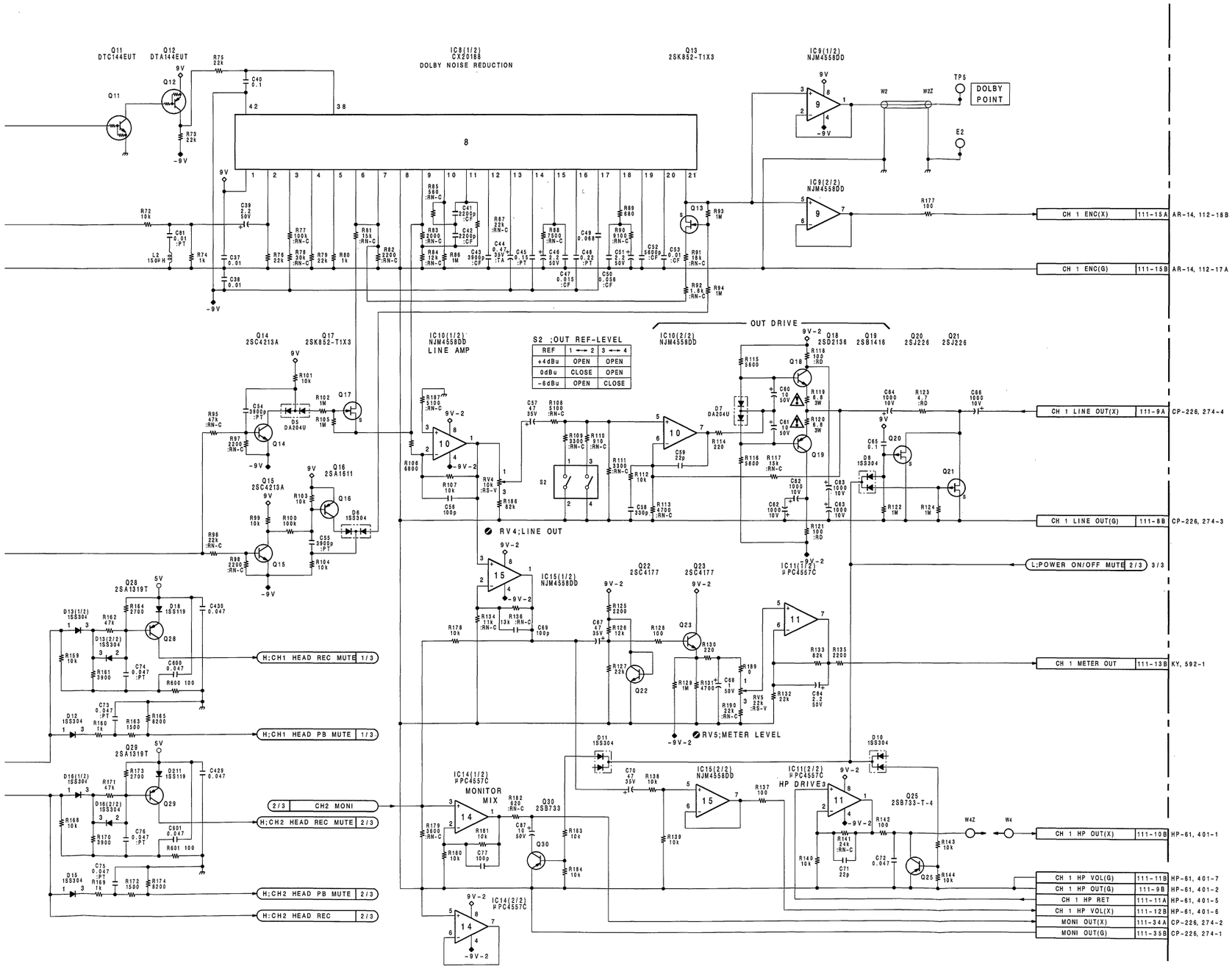

*	UVW-1400	
	J, UC	PAL
C2	390P	470P
C3	150P	150P
C4	120P	68P
C5	N M	N M
C13	N M	6800P(:PT)
C14	N M	3300P
R7	N M	N M
R15	N M	μ10K
R37	μ150K	μ270K
R38	μ430K	μ120K
R39	μ430K	μ270K
R41	μ 15K	μ 56K
R42	μ 68K	μ100K
R43	μ470K	N M
R44	μ 1M	μ 1M
R45	μ 62K	μ 22K
W3	N M	N M

△ =:RN ▲ =:RN-C

#	CHANGED INFORMATION	SERIAL NO.
C3	47P ⟶ 150P	UVW-1400 (J) ;#10421-
C4	68P ⟶ 120P	UVW-1400 (UC);#11141-
C3	47P ⟶ 150P	UVW-1400P(EK);#12451-
C4	22P ⟶ 68P	

AP-31B/31BP BOARD (1/3)

BOARD NO. 1-648-906-12
UVW-1400 (J) ;#10421-
UVW-1400 (UC) ;#11051-
UVW-1400P (EK) ;#11491-

AP-31B/BP (1-648-906-11,12)

CN1	H-1	FS40	C-2	FS121	G-5	Q2	H-2	✱TH1	J-2
CN2	A-1	FS41	D-2	FS122	G-5	Q3	H-2	✱TH2	B-2
CN3	G-4	FS43	C-2	FS123	H-5	✱Q4	J-2		
CN111	E-5	FS44	D-2	FS124	H-5	✱Q5	J-2	TP1	H-1
		FS45	D-2	FS125	H-1	✱Q6	J-2	TP2	J-1
✱D1	J-2	FS46	D-2	FS126	J-1	✱Q7	J-2	TP3	J-2
✱D2	H-3	FS47	C-3	FS127	J-1	✱Q8	H-3	TP4	G-2
✱D3	H-4	FS48	C-3	FS128	J-1	✱Q9	H-4	TP5	G-1
✱D5	G-3	FS49	C-3	FS129	H-2	✱Q10	H-4	TP201	A-1
✱D6	G-3	FS50	C-3	FS130	J-2	✱Q11	C-2	TP202	A-1
✱D7	J-5	FS51	C-3	FS131	J-2	✱Q12	E-2	TP203	B-2
✱D8	H-5	FS52	D-3	FS132	J-2	✱Q13	E-1	TP204	C-2
✱D10	G-5	FS53	C-3	FS133	J-3	✱Q14	G-3	TP205	D-1
✱D11	E-3	FS54	C-4	FS134	J-3	✱Q15	F-3	TP401	G-4
✱D12	F-3	FS55	C-4	FS135	J-3	✱Q16	F-3	TP402	G-5
✱D13	F-3	FS56	D-4	FS136	H-3	✱Q17	F-2	TP403	D-1
✱D15	E-3	FS57	D-4	FS137	J-3	Q18	J-5		
✱D16	E-3	FS58	C-4	FS138	J-3	Q19	J-5		
✱D17	J-2	FS59	C-4	FS139	H-3	Q20	H-5		
✱D18	H-2	FS61	D-4	FS140	J-3	Q21	H-5		
✱D201	A-2	FS63	D-4	FS141	J-3	✱Q22	J-4		
✱D202	C-3	FS64	B-4	FS142	J-4	✱Q23	H-4		
✱D203	C-4	FS65	D-5	FS143	J-4	Q25	G-4		
✱D204	D-3	FS66	D-5	FS144	J-4	✱Q26	E-3		
✱D205	D-3	FS67	D-5	FS145	J-4	✱Q27	D-4		
✱D206	A-5	FS68	E-5	FS146	J-4	Q28	H-3		
✱D207	B-5	FS69	C-5	FS147	J-5	Q29	A-3		
✱D209	C-4	FS70	C-5	FS148	J-5	Q30	E-3		
✱D210	B-2	FS71	E-3	FS149	J-5	✱Q34	J-2		
✱D211	A-3	FS72	E-3	FS150	H-5	✱Q35	J-2		
✱D401	F-3	FS73	F-3	FS151	H-5	✱Q36	J-2		
✱D403	F-5	FS74	E-4	FS152	H-5	✱Q201	A-1		
✱D500	D-5	FS75	E-4	FS153	G-5	Q202	A-2		
		FS76	F-4	FS154	G-5	Q203	A-2		
E1	H-4	FS77	F-4	FS155	H-5	✱Q204	B-2		
E2	G-1	FS78	E-5	FS156	H-5	✱Q205	A-2		
E201	B-4	FS79	F-5			✱Q206	A-2		
E202	E-1	FS80	F-5	IC1	J-2	✱Q207	B-2		
		FS81	H-1	IC2	J-4	✱Q208	C-3		
FS1	A-1	FS82	H-1	IC3	J-3	✱Q209	B-4		
FS3	A-2	FS83	G-1	IC4	H-3	✱Q210	B-4		
FS4	B-2	FS84	G-1	IC5	G-4	✱Q211	E-1		
FS5	B-2	FS85	G-1	IC6	G-3	✱Q212	D-3		
FS6	B-2	FS86	G-1	IC7	G-3	✱Q213	D-3		
FS7	A-3	FS87	H-1	IC8	F-2	✱Q214	D-3		
FS8	B-3	FS88	H-1	IC9	G-2	✱Q215	E-2		
FS9	B-3	FS89	H-1	IC10	G-2	Q216	A-5		
FS10	A-3	FS90	G-1	IC11	H-4	Q217	A-5		
FS11	B-3	FS91	G-1	IC12	E-5	Q218	C-5		
FS12	A-3	FS92	G-2	IC13	D-4	Q219	C-5		
FS13	A-3	FS93	G-2	IC14	E-3	✱Q220	B-4		
FS14	B-3	FS94	F-2	IC15	J-4	✱Q221	B-4		
FS15	B-3	FS96	H-2	IC201	A-2	Q223	C-4		
FS16	A-4	FS97	H-2	IC202	A-4	✱Q224	B-2		
FS17	A-4	FS98	F-2	IC203	A-3	✱Q225	B-2		
FS18	A-4	FS99	F-2	IC204	B-3	✱Q226	B-2		
FS19	B-4	FS100	G-2	IC205	C-4	✱Q401	G-4		
FS20	A-4	FS101	H-2	IC206	C-3	✱Q402	F-5		
FS21	A-4	FS102	H-2	IC207	C-3	✱Q403	F-3		
FS22	A-5	FS103	G-3	IC208	C-2				
FS23	A-5	FS104	G-3	IC209	C-2	RV1	J-1		
FS24	A-5	FS105	G-3	IC210	C-4	RV2	J-1		
FS25	B-5	FS106	H-3	IC211	A-4	RV3	J-1		
FS26	A-5	FS107	H-3	IC401	F-4	RV4	H-1		
FS27	B-5	FS108	H-3	IC402	F-4	RV5	H-1		
FS28	B-5	FS109	H-3	✱IC405	C-5	RV201	B-1		
FS29	B-5	FS110	G-3	✱IC406	D-5	RV202	B-1		
FS30	C-1	FS111	G-4	✱IC407	D-5	RV203	B-1		
FS31	C-1	FS112	G-4	✱IC408	C-5	RV204	C-1		
FS32	C-1	FS113	G-4	✱IC409	D-5	RV205	C-1		
FS33	C-1	FS114	H-4	IC410	F-5				
FS34	C-1	FS115	H-4			S1	J-1		
FS35	C-1	FS116	G-4	PS1	G-5	S2	G-1		
FS36	D-1	FS117	H-4	PS2	G-5	S201	A-1		
FS38	C-2	FS118	H-4			S202	C-1		
FS39	C-2	FS119	H-5	✱Q1	H-1				

✱ : B SIDE

AP-31B/31BP (2/3)

UVW-1400(J)	:Serial No. 10001 through 10420
UVW-1400(UC)	:Serial No. 10001 through 11050
UVW-1400P(EK)	:Serial No. 10001 through 11490

AP-31B/31BP(2/3);CH-2 PB EQ/NR, LINE/METER/HP DRIVE

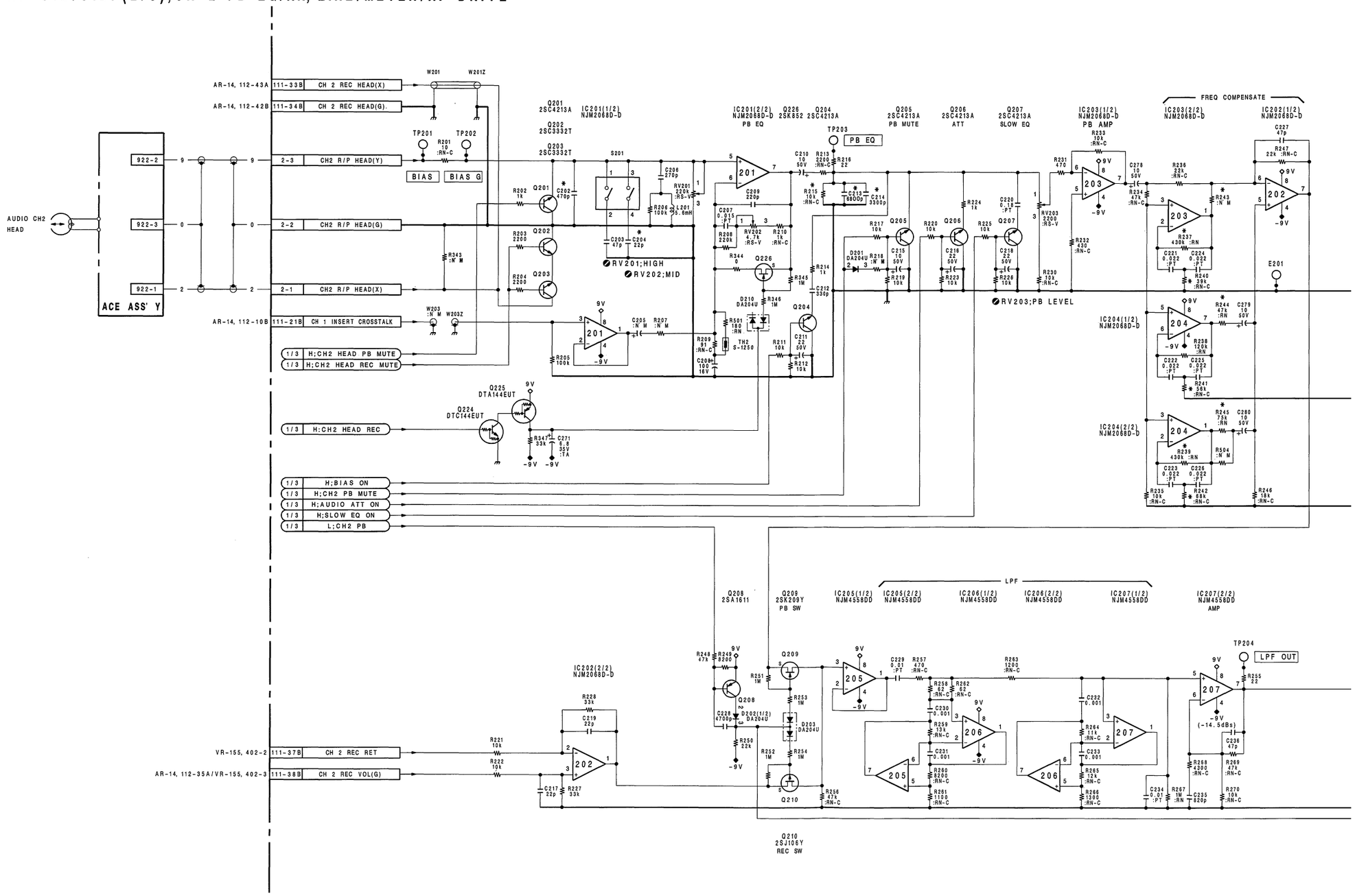

16-10 (a) 16-10 (a)

AP-31B/31BP (2/3)

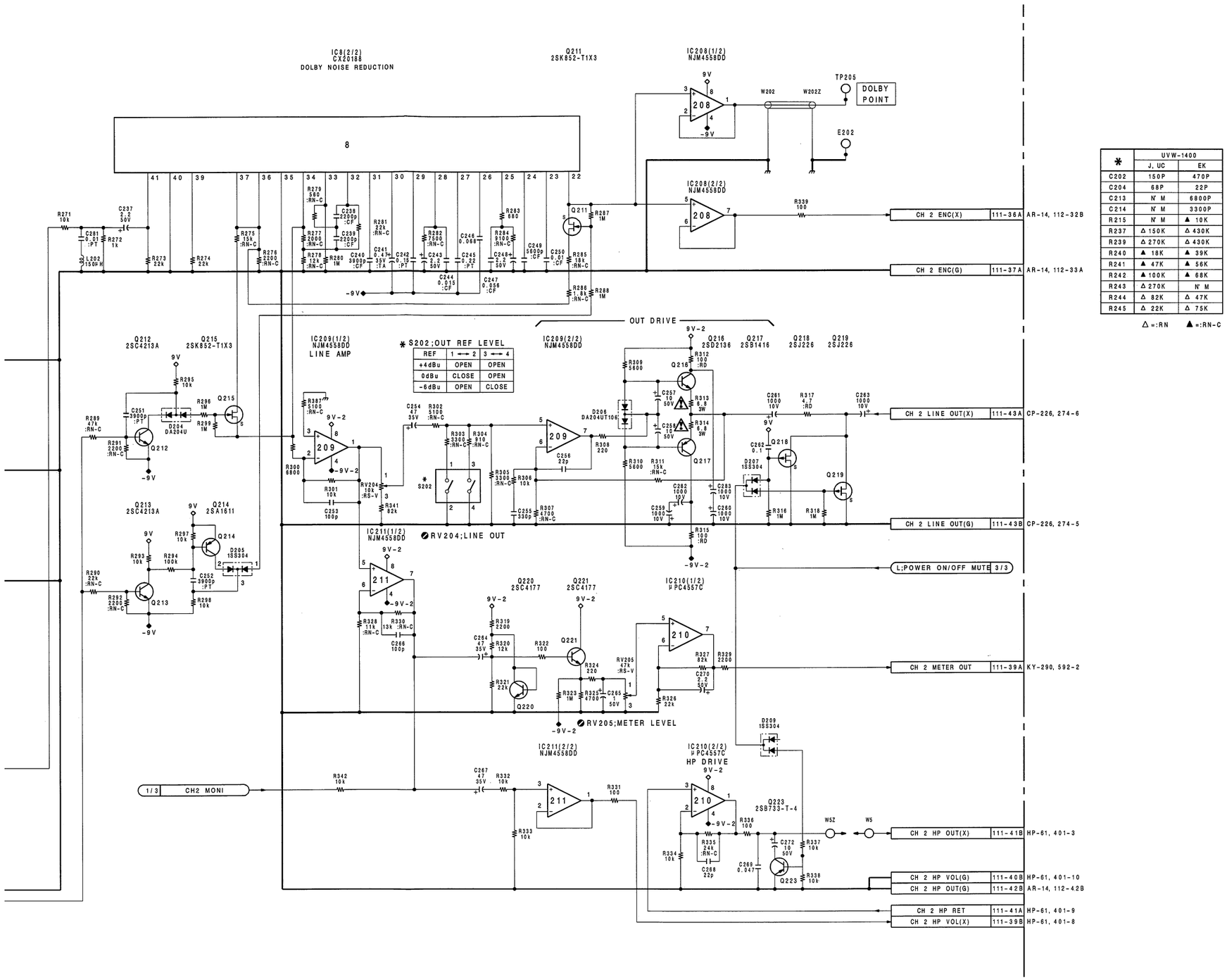

*	UVW-1400	
	J, UC	EK
C202	150P	470P
C204	68P	22P
C213	N. M	6800P
C214	N. M	3300P
R215	N. M	▲ 10K
R237	△ 150K	△ 430K
R239	△ 270K	△ 430K
R240	▲ 18K	▲ 39K
R241	▲ 47K	▲ 56K
R242	▲ 100K	▲ 68K
R243	△ 270K	N. M
R244	△ 82K	△ 47K
R245	△ 22K	△ 75K

△ =:RN ▲ =:RN-C

AP-31B/31BP BOARD (2/3)

BOARD NO. 1-648-906-11
UVW-1400 (J) ; #10001-10420
UVW-1400 (UC) ; #10001-11050
UVW-1400P (EK) ; #10001-11490

AP-31B/31BP (2/3)

UVW-1400(J)	:Serial No. 10421 and higher
UVW-1400(UC)	:Serial No. 11051 and higher
UVW-1400P(EK)	:Serial No. 11491 and higher

AP-31B/31BP(2/3);CH-2 PB EQ/NR, LINE/METER/HP DRIVE

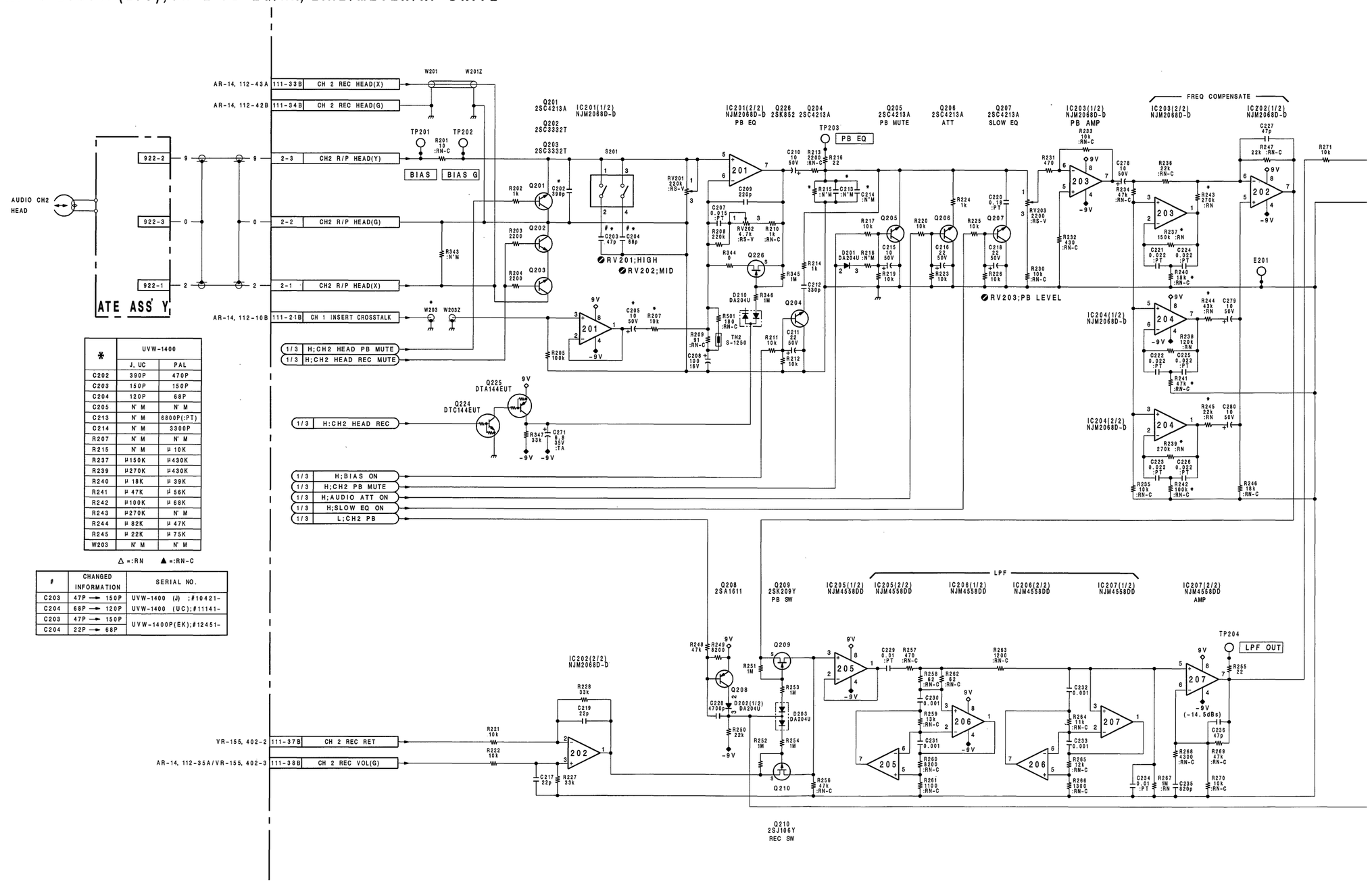

*	UVW-1400	
	J, UC	PAL
C202	390P	470P
C203	150P	150P
C204	120P	68P
C205	N.M	N.M
C213	N.M	6800P(:PT)
C214	N.M	3300P
R207	N.M	N.M
R215	N.M	μ10K
R237	μ150K	μ430K
R239	μ270K	μ430K
R240	μ18K	μ39K
R241	μ47K	μ56K
R242	μ100K	μ68K
R243	μ270K	N.M
R244	μ82K	μ47K
R245	μ22K	μ75K
W203	N.M	N.M

△=:RN ▲=:RN-C

#	CHANGED INFORMATION	SERIAL NO.
C203	47P → 150P	UVW-1400 (J) :#10421-
C204	68P → 120P	UVW-1400 (UC):#11141-
C203	47P → 150P	UVW-1400P(EK):#12451-
C204	22P → 68P	

16-10 (b)

AP-31B/31BP (2/3)

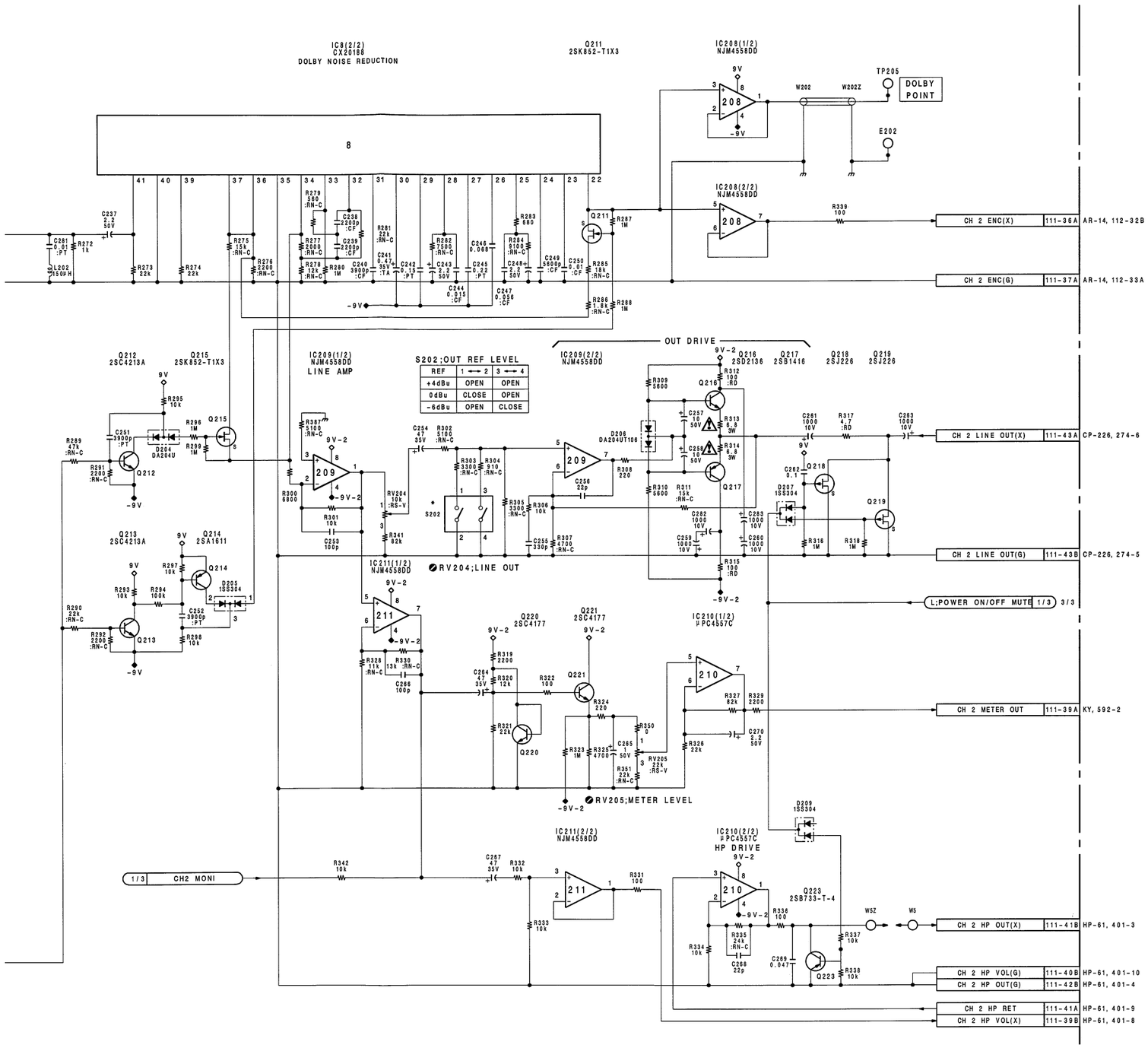

AP-31B/31BP BOARD (2/3)

BOARD NO.1-648-906-12
UVW-1400 (J) ;#10421-
UVW-1400 (UC) ;#11051-
UVW-1400P (EK) ;#11491-

AP-31B/BP (1-648-906-11,12)

CN1	H-1	FS40	C-2	FS121	G-5	Q2	H-2	✱TH1	J-2
CN2	A-1	FS41	D-2	FS122	G-5	Q3	H-2	✱TH2	B-2
CN3	G-4	FS43	C-2	FS123	H-5	✱Q4	J-2		
CN111	E-5	FS44	D-2	FS124	H-5	✱Q5	J-2	TP1	H-1
		FS45	D-2	FS125	H-1	✱Q6	J-2	TP2	J-1
✱D1	J-2	FS46	D-2	FS126	J-1	✱Q7	J-2	TP3	J-2
✱D2	H-3	FS47	C-3	FS127	J-1	✱Q8	H-3	TP4	G-2
✱D3	H-4	FS48	C-3	FS128	J-1	✱Q9	H-4	TP5	G-1
✱D5	G-3	FS49	C-3	FS129	H-2	✱Q10	H-4	TP201	A-1
✱D6	G-3	FS50	C-3	FS130	J-2	✱Q11	C-2	TP202	A-1
✱D7	J-5	FS51	C-3	FS131	J-2	✱Q12	E-2	TP203	B-2
✱D8	H-5	FS52	D-3	FS132	J-2	✱Q13	E-1	TP204	C-2
✱D10	G-5	FS53	C-3	FS133	J-3	✱Q14	G-3	TP205	D-1
✱D11	E-3	FS54	C-4	FS134	J-3	✱Q15	F-3	TP401	G-4
✱D12	F-3	FS55	C-4	FS135	J-3	✱Q16	F-3	TP402	G-5
✱D13	F-3	FS56	D-4	FS136	H-3	✱Q17	F-2	TP403	D-1
✱D15	E-3	FS57	D-4	FS137	J-3	Q18	J-5		
✱D16	E-3	FS58	C-4	FS138	J-3	Q19	J-5		
✱D17	J-2	FS59	C-4	FS139	H-3	Q20	H-5		
✱D18	H-2	FS61	D-4	FS140	J-3	Q21	H-5		
✱D201	A-2	FS63	D-4	FS141	J-3	✱Q22	J-4		
✱D202	C-3	FS64	B-4	FS142	J-4	✱Q23	H-4		
✱D203	C-4	FS65	D-5	FS143	J-4	Q25	G-4		
✱D204	D-3	FS66	D-5	FS144	J-4	✱Q26	E-3		
✱D205	D-3	FS67	D-5	FS145	J-4	✱Q27	D-4		
✱D206	A-5	FS68	E-5	FS146	J-4	Q28	H-3		
✱D207	B-5	FS69	C-5	FS147	J-5	Q29	A-3		
✱D209	C-4	FS70	C-5	FS148	J-5	Q30	E-3		
✱D210	B-2	FS71	E-3	FS149	J-5	✱Q34	J-2		
✱D211	A-3	FS72	E-3	FS150	H-5	✱Q35	J-2		
✱D401	F-3	FS73	F-3	FS151	H-5	✱Q36	J-2		
✱D403	F-5	FS74	E-4	FS152	H-5	✱Q201	A-1		
✱D500	D-5	FS75	E-4	FS153	G-5	Q202	A-2		
		FS76	F-4	FS154	G-5	Q203	A-2		
E1	H-4	FS77	F-4	FS155	H-5	✱Q204	B-2		
E2	G-1	FS78	E-5	FS156	H-5	✱Q205	A-2		
E201	B-4	FS79	F-5			✱Q206	A-2		
E202	E-1	FS80	F-5	IC1	J-2	✱Q207	B-2		
		FS81	H-1	IC2	J-4	✱Q208	C-3		
FS1	A-1	FS82	H-1	IC3	J-3	✱Q209	B-4		
FS3	A-2	FS83	G-1	IC4	H-3	✱Q210	B-4		
FS4	B-2	FS84	G-1	IC5	G-4	✱Q211	E-1		
FS5	B-2	FS85	G-1	IC6	G-3	✱Q212	D-3		
FS6	B-2	FS86	G-1	IC7	G-3	✱Q213	D-3		
FS7	A-3	FS87	H-1	IC8	F-2	✱Q214	D-3		
FS8	B-3	FS88	H-1	IC9	G-2	✱Q215	E-2		
FS9	B-3	FS89	H-1	IC10	G-2	Q216	A-5		
FS10	A-3	FS90	G-1	IC11	H-4	Q217	A-5		
FS11	B-3	FS91	G-1	IC12	E-5	Q218	C-5		
FS12	A-3	FS92	G-2	IC13	D-4	Q219	C-5		
FS13	A-3	FS93	G-2	IC14	E-3	✱Q220	B-4		
FS14	B-3	FS94	F-2	IC15	J-4	✱Q221	B-4		
FS15	B-3	FS96	H-2	IC201	A-2	Q223	C-4		
FS16	A-4	FS97	H-2	IC202	A-4	✱Q224	B-2		
FS17	A-4	FS98	F-2	IC203	A-3	✱Q225	B-2		
FS18	A-4	FS99	F-2	IC204	B-3	✱Q226	B-2		
FS19	B-4	FS100	G-2	IC205	C-4	✱Q401	G-4		
FS20	A-4	FS101	H-2	IC206	C-3	✱Q402	F-5		
FS21	A-4	FS102	H-2	IC207	C-3	✱Q403	F-3		
FS22	A-5	FS103	G-3	IC208	C-2				
FS23	A-5	FS104	G-3	IC209	C-2	RV1	J-1		
FS24	A-5	FS105	G-3	IC210	C-4	RV2	J-1		
FS25	B-5	FS106	H-3	IC211	A-4	RV3	J-1		
FS26	A-5	FS107	H-3	IC401	F-4	RV4	H-1		
FS27	B-5	FS108	H-3	IC402	F-4	RV5	H-1		
FS28	B-5	FS109	H-3	✱IC405	C-5	RV201	B-1		
FS29	B-5	FS110	G-3	✱IC406	D-5	RV202	B-1		
FS30	C-1	FS111	G-4	✱IC407	D-5	RV203	B-1		
FS31	C-1	FS112	G-4	✱IC408	C-5	RV204	C-1		
FS32	C-1	FS113	G-4	✱IC409	D-5	RV205	C-1		
FS33	C-1	FS114	H-4	IC410	F-5				
FS34	C-1	FS115	H-4			S1	J-1		
FS35	C-1	FS116	G-4	PS1	G-5	S2	G-1		
FS36	D-1	FS117	H-4	PS2	G-5	S201	A-1		
FS38	C-2	FS118	H-4			S202	C-1		
FS39	C-2	FS119	H-5	✱Q1	H-1				

✱ : B SIDE

AP-31B/31BP (3/3)

AP-31B/31BP(3/3);LTC PB

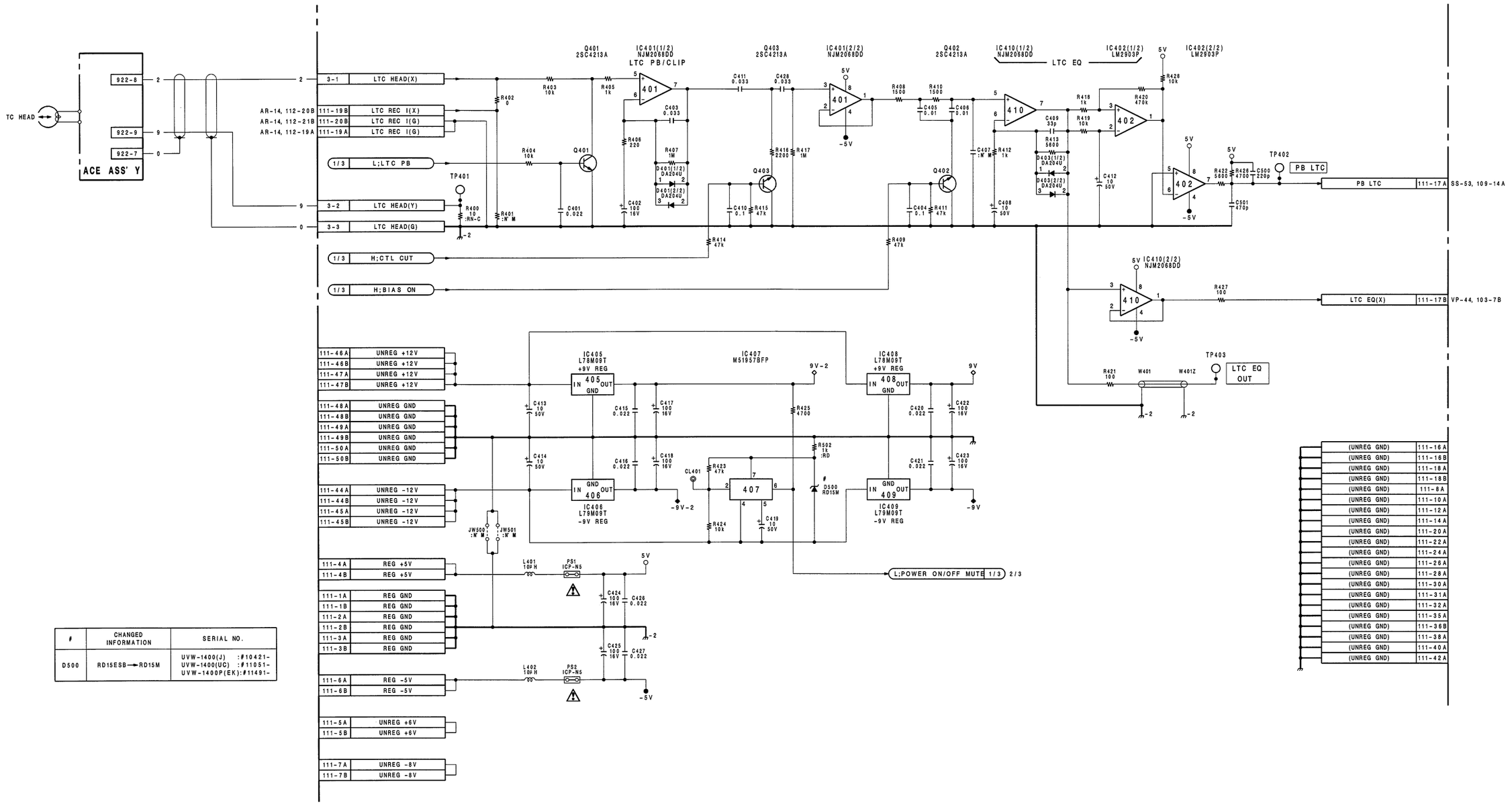

#	CHANGED INFORMATION	SERIAL NO.
D500	RD15ESB→RD15M	UVW-1400(J) :#10421- UVW-1400(UC) :#11051- UVW-1400P(EK):#11491-

AP-31B/31BP BOARD (3/3)

BOARD NO. 1-648-906-11, 12
UVW-1400 (J) ;#10001-
UVW-1400 (UC) ;#10001-
UVW-1400P (EK) ;#10001-

AP-34/34P(1-648-905-11)

CN1	C-1	FS224	C-4	IC405	A-4
CN2	H-3	FS225	C-5	IC406	A-4
CN3	C-5	FS226	D-4	IC407	D-4
CN4	B-5	FS227	D-5	IC408	C-5
CN5	G-4	FS228	E-5	IC409	A-2
CN6	J-4	FS229	E-5	IC410	A-5
CN7	H-5	FS230	E-5		
CN8	J-2	FS231	E-5	PS101	J-2
		FS232	F-5	PS102	J-3
✱D101	J-1	FS233	D-5	PS103	H-3
✱D103	J-2	FS234	G-1		
D104	G-3	FS235	G-1	✱Q101	J-2
✱D201	D-5	FS236	G-1	✱Q201	E-2
✱D202	F-2	FS237	H-1	✱Q202	E-2
✱D203	F-5	FS238	H-1	✱Q203	E-2
✱D204	E-5	FS239	H-1	✱Q204	B-4
✱D401	A-2	FS240	H-1	Q205	D-5
✱D402	A-5	FS401	C-1	Q206	F-2
✱D403	B-5	FS402	C-2	Q207	F-2
		FS403	B-1	Q208	F-5
E1	E-1	FS404	B-1	Q209	E-5
E2	J-1	FS405	B-2	Q210	F-5
E100	H-4	FS406	A-1	✱Q212	C-4
E201	B-1	FS407	A-2	✱Q401	B-2
E202	J-1	FS408	B-2	✱Q402	B-2
		FS409	B-3	✱Q403	B-2
FS1	G-4	FS410	A-3	Q404	A-2
FS2	G-5	FS411	B-4	Q405	A-2
FS3	H-5	FS412	C-4	Q406	A-5
FS4	J-4	FS413	C-3	Q407	A-5
FS5	H-5	FS414	B-3	Q408	A-5
FS6	J-5	FS415	B-2		
FS101	J-2	FS416	C-4	RV1	D-1
FS102	J-1	FS417	B-4	RV2	D-1
FS103	J-1	FS418	A-1	RV3	E-1
FS104	H-1	FS419	A-1	RV4	F-1
FS105	H-2	FS420	A-2	RV201	B-1
FS106	J-2	FS421	A-2	RV202	B-1
FS107	J-3	FS422	A-2	RV203	B-1
FS108	J-2	FS423	A-4	RV204	A-1
FS109	J-2	FS424	A-5		
FS110	H-3	FS425	B-5	S1	D-1
FS111	H-3	FS426	B-5	S2	F-1
FS112	H-3	FS427	B-5	S201	C-1
FS113	H-3	FS428	B-5	S202	A-1
FS114	H-3	FS429	C-5		
FS115	H-3	FS430	C-1	TH1	D-1
FS116	H-2			TH2	B-1
FS117	G-2	IC1	G-4		
FS118	G-2	IC2	H-4	TP3	C-2
FS119	G-2	IC3	J-4	TP4	E-4
FS120	G-3	IC4	J-4	TP5	H-1
FS121	G-1	✱IC101	G-2	TP203	C-2
FS201	C-1	✱IC102	G-3	TP204	B-4
FS202	D-1	IC103	J-2	TP205	J-1
FS203	E-1	✱IC104	G-4	TP402	H-2
FS204	D-1	✱IC105	H-3	TP403	J-1
FS205	E-2	✱IC106	G-2		
FS206	E-1	✱IC107	G-3		
FS207	F-1	✱IC108	J-3		
FS208	C-1	IC109	H-1		
FS209	E-3	IC110	H-2		
FS210	E-3	IC201	D-1		
FS211	E-3	IC202	E-3		
FS212	E-4	IC203	E-1		
FS213	E-4	IC204	E-3		
FS214	D-4	IC205	E-4		
FS215	D-3	IC206	E-4		
FS216	D-3	IC209	F-2		
FS217	D-2	IC210	D-5		
FS218	F-1	IC211	E-5		
FS219	G-1	IC212	G-1		
FS220	F-2	IC401	C-1		
FS221	F-2	IC402	A-3		
FS222	F-2	IC403	A-1		
FS223	F-4	IC404	A-3		

✱ : B SIDE

AP-34/34P(1/2);RF HEAD AMP., LTC PB

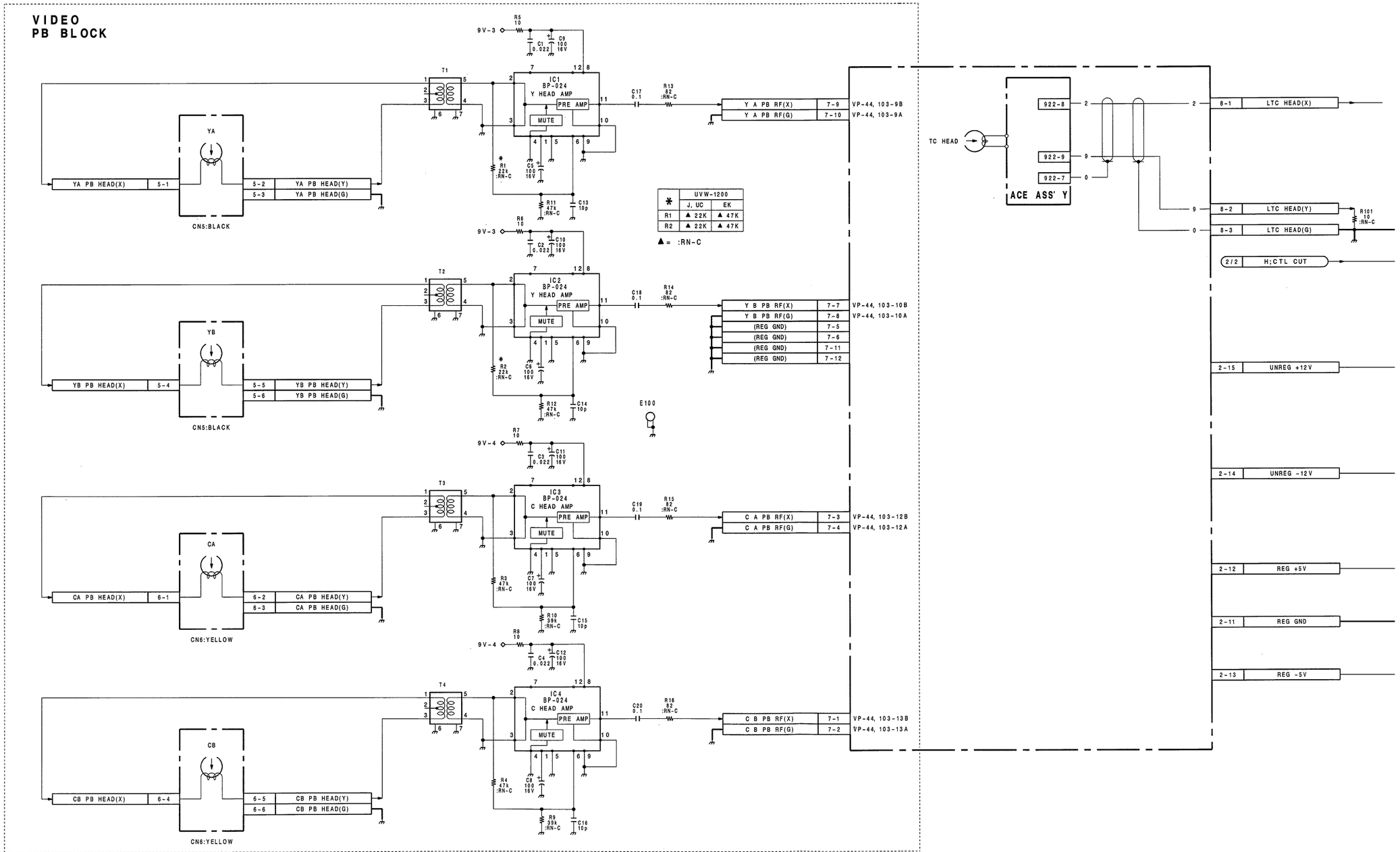

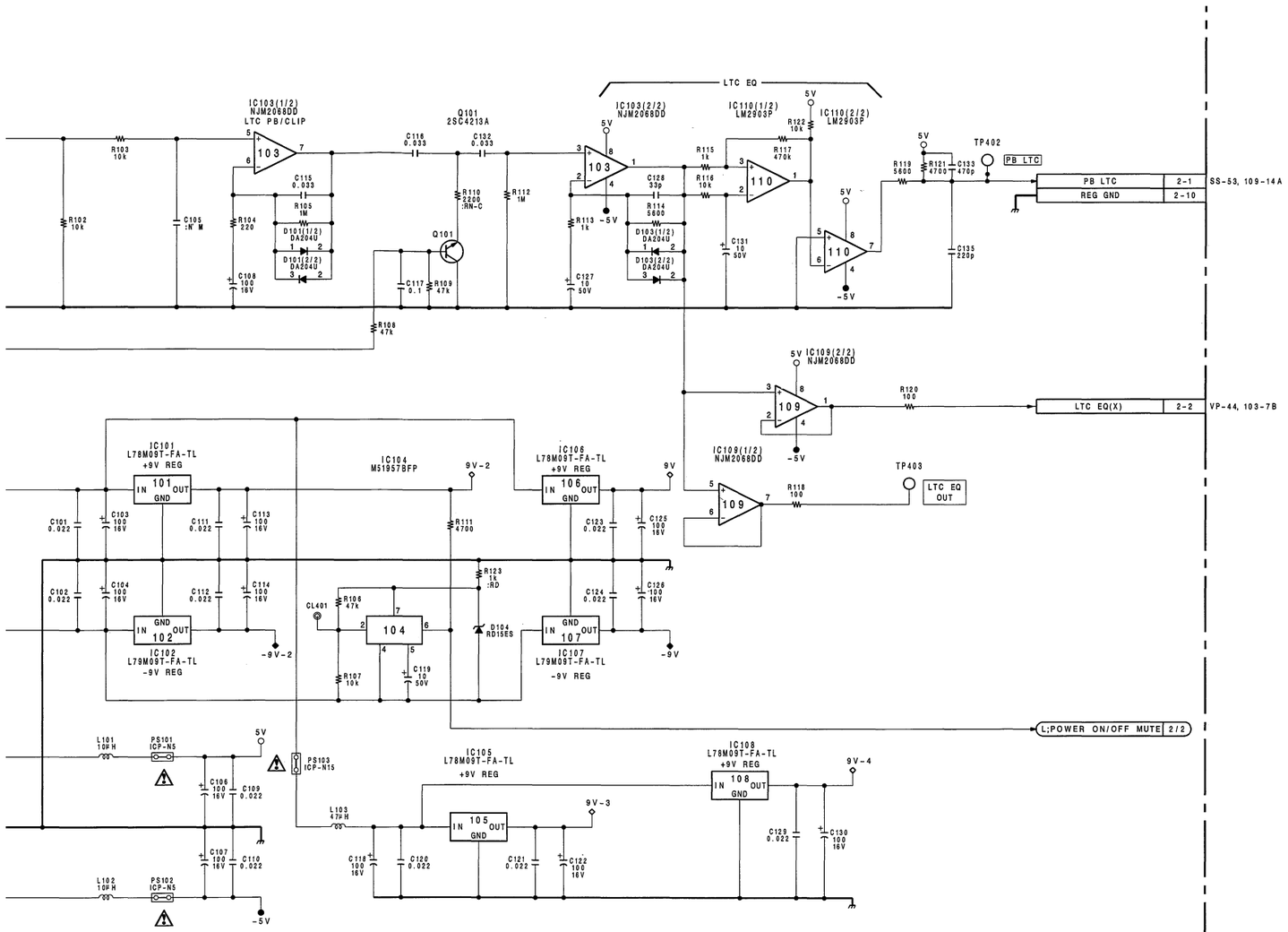

AP-34/34P BOARD (1/2)

BOARD NO. 1-648-905-11
UVW-1200 (J) ;#10001-
UVW-1200 (UC) ;#10001-
UVW-1200P (EK) ;#10001-

AP-34/34P(1-648-905-11)

CN1	C-1	FS224	C-4	IC405	A-4
CN2	H-3	FS225	C-5	IC406	A-4
CN3	C-5	FS226	D-4	IC407	D-4
CN4	B-5	FS227	D-5	IC408	C-5
CN5	G-4	FS228	E-5	IC409	A-2
CN6	J-4	FS229	E-5	IC410	A-5
CN7	H-5	FS230	E-5		
CN8	J-2	FS231	E-5	PS101	J-2
		FS232	F-5	PS102	J-3
✱D101	J-1	FS233	D-5	PS103	H-3
✱D103	J-2	FS234	G-1		
D104	G-3	FS235	G-1	✱Q101	J-2
✱D201	D-5	FS236	G-1	✱Q201	E-2
✱D202	F-2	FS237	H-1	✱Q202	E-2
✱D203	F-5	FS238	H-1	✱Q203	E-2
✱D204	E-5	FS239	H-1	✱Q204	B-4
✱D401	A-2	FS240	H-1	Q205	D-5
✱D402	A-5	FS401	C-1	Q206	F-2
✱D403	B-5	FS402	C-2	Q207	F-2
		FS403	B-1	Q208	F-5
E1	E-1	FS404	B-1	Q209	E-5
E2	J-1	FS405	B-2	Q210	F-5
E100	H-4	FS406	A-1	✱Q212	C-4
E201	B-1	FS407	A-2	✱Q401	B-2
E202	J-1	FS408	B-2	✱Q402	B-2
		FS409	B-3	✱Q403	B-2
FS1	G-4	FS410	A-3	Q404	A-2
FS2	G-5	FS411	B-4	Q405	A-2
FS3	H-5	FS412	C-4	Q406	A-5
FS4	J-4	FS413	C-3	Q407	A-5
FS5	H-5	FS414	B-3	Q408	A-5
FS6	J-5	FS415	B-2		
FS101	J-2	FS416	C-4	RV1	D-1
FS102	J-1	FS417	B-4	RV2	D-1
FS103	J-1	FS418	A-1	RV3	E-1
FS104	H-1	FS419	A-1	RV4	F-1
FS105	H-2	FS420	A-2	RV201	B-1
FS106	J-2	FS421	A-2	RV202	B-1
FS107	J-3	FS422	A-2	RV203	B-1
FS108	J-2	FS423	A-4	RV204	A-1
FS109	J-2	FS424	A-5		
FS110	H-3	FS425	B-5	S1	D-1
FS111	H-3	FS426	B-5	S2	F-1
FS112	H-3	FS427	B-5	S201	C-1
FS113	H-3	FS428	B-5	S202	A-1
FS114	H-3	FS429	C-5		
FS115	H-3	FS430	C-1	TH1	D-1
FS116	H-2			TH2	B-1
FS117	G-2	IC1	G-4		
FS118	G-2	IC2	H-4	TP3	C-2
FS119	G-2	IC3	J-4	TP4	E-4
FS120	G-3	IC4	J-4	TP5	H-1
FS121	G-1	✱IC101	G-2	TP203	C-2
FS201	C-1	✱IC102	G-3	TP204	B-4
FS202	D-1	IC103	J-2	TP205	J-1
FS203	E-1	✱IC104	G-4	TP402	H-2
FS204	D-1	✱IC105	H-3	TP403	J-1
FS205	E-2	✱IC106	G-2		
FS206	E-1	✱IC107	G-3		
FS207	F-1	✱IC108	J-3		
FS208	C-1	IC109	H-1		
FS209	E-3	IC110	H-2		
FS210	E-3	IC201	D-1		
FS211	E-3	IC202	E-3		
FS212	E-4	IC203	E-1		
FS213	E-4	IC204	E-3		
FS214	D-4	IC205	E-4		
FS215	D-3	IC206	E-4		
FS216	D-3	IC209	F-2		
FS217	D-2	IC210	D-5		
FS218	F-1	IC211	E-5		
FS219	G-1	IC212	G-1		
FS220	F-2	IC401	C-1		
FS221	F-2	IC402	A-3		
FS222	F-2	IC403	A-1		
FS223	F-4	IC404	A-3		

✱ : B SIDE

AP-34/34P (2/2)

AP-34/34P(2/2);AUDIO PB EQ/NR, LINE/HP DRIVE

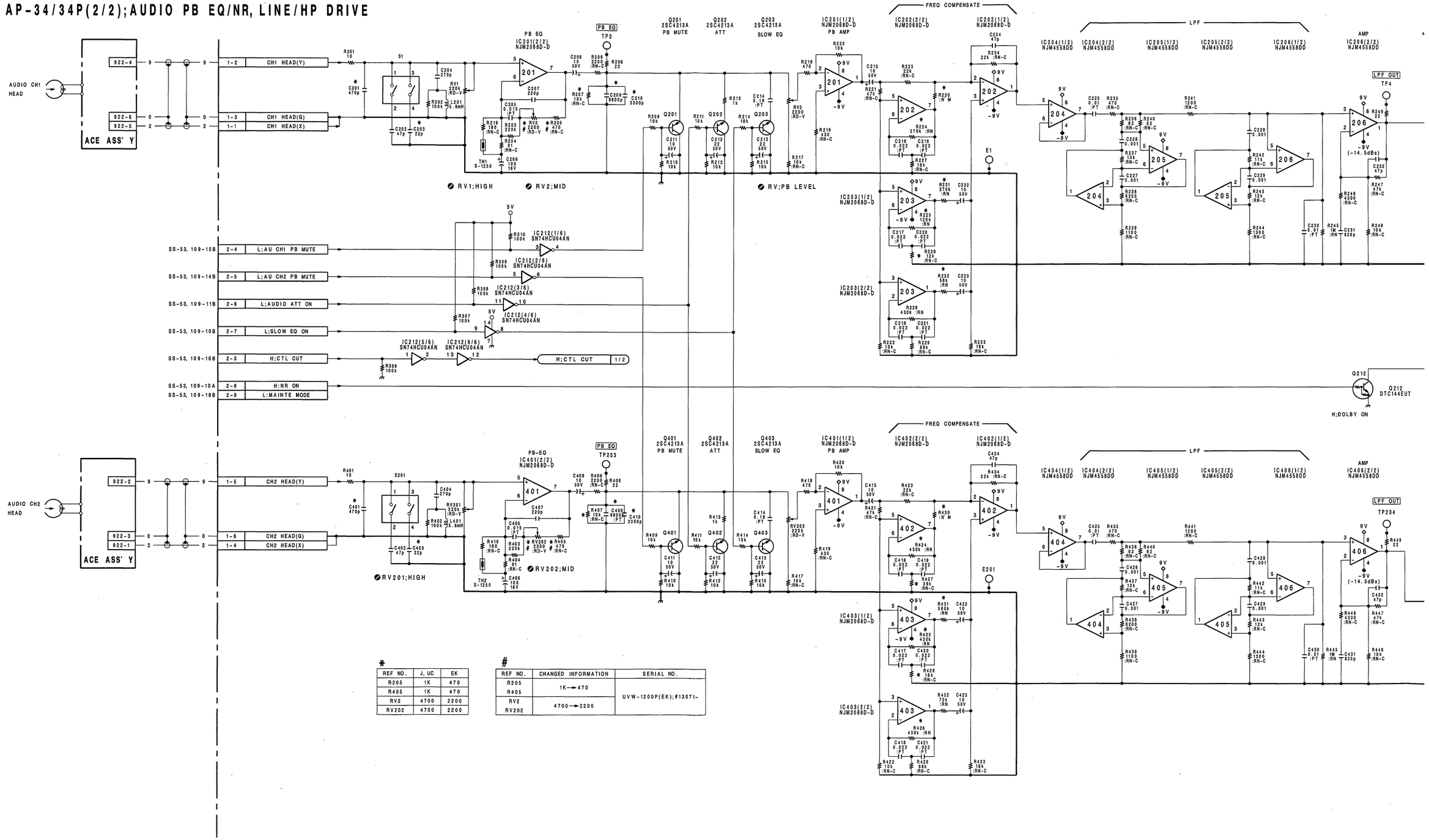

*

REF NO.	J, UC	EK
R205	1K	470
R405	1K	470
RV2	4700	2200
RV202	4700	2200

\#

REF NO.	CHANGED INFORMATION	SERIAL NO.
R205	1K→470	UVW-1200P(EK);#13071-
R405		
RV2	4700→2200	
RV202		

16-20

AP-34/34P (2/2)

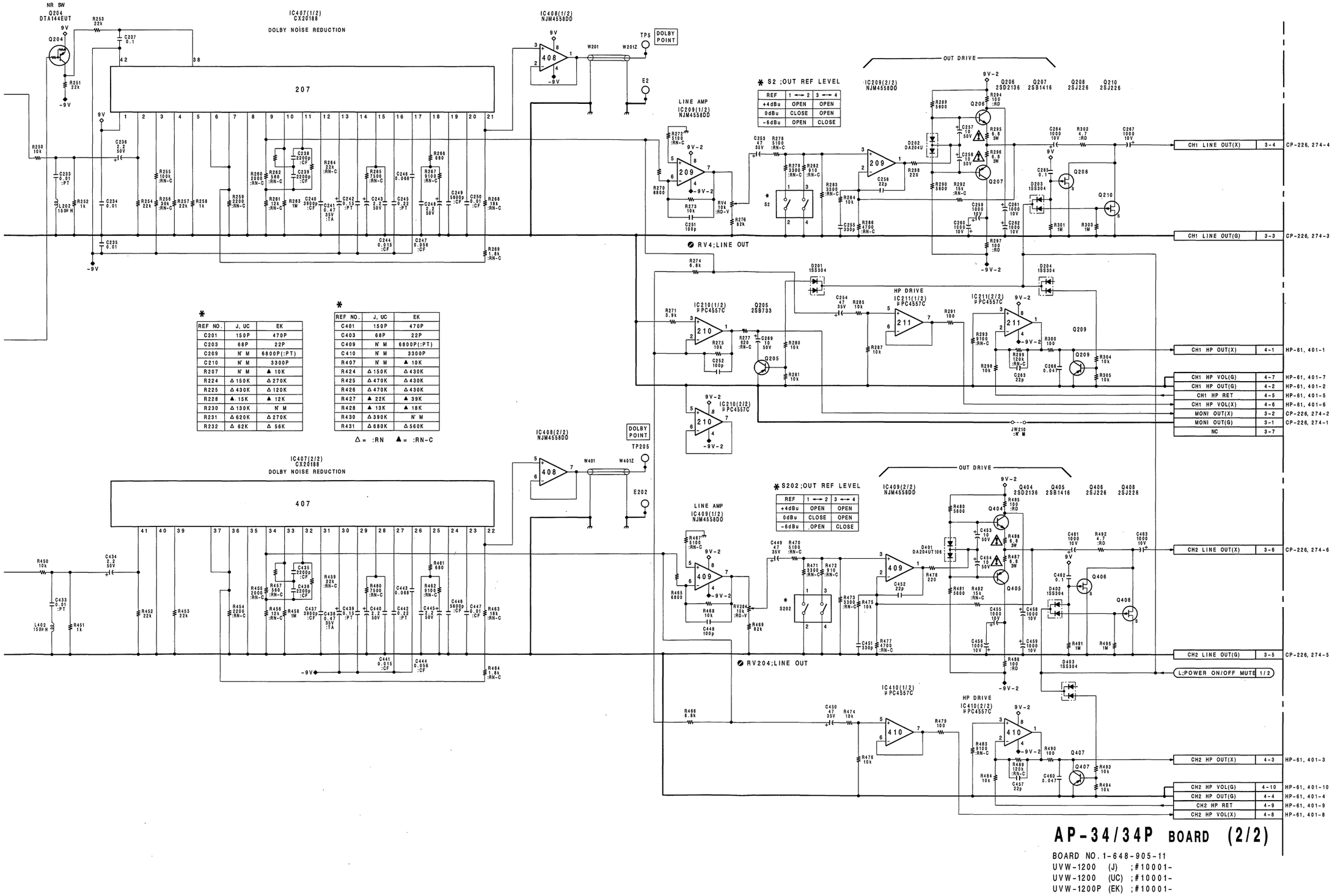

*

REF NO.	J, UC	EK
C201	150P	470P
C203	68P	22P
C209	N M	6800P(:PT)
C210	N M	3300P
R207	N M	▲ 10K
R224	△ 150K	△ 270K
R225	△ 430K	△ 120K
R228	▲ 15K	▲ 12K
R230	△ 130K	N M
R231	△ 620K	△ 270K
R232	△ 62K	△ 56K

*

REF NO.	J, UC	EK
C401	150P	470P
C403	68P	22P
C409	N M	6800P(:PT)
C410	N M	3300P
R407	N M	▲ 10K
R424	△ 150K	△ 430K
R425	△ 470K	△ 430K
R426	△ 470K	△ 430K
R427	▲ 22K	▲ 39K
R428	▲ 13K	▲ 18K
R430	△ 390K	N M
R431	△ 680K	△ 560K

△= :RN ▲= :RN-C

AP-34/34P BOARD (2/2)

BOARD NO. 1-648-905-11
UVW-1200 (J) ;#10001-
UVW-1200 (UC) ;#10001-
UVW-1200P (EK) ;#10001-

AR-14A/14AP (1-648-907-21,22)

CN112	E-5	FS59		D-4	FS137		J-2	RV302	B-4
		FS60		D-5	FS138	N	J-3		
✱D1	D-5	FS61		D-1	FS139	N	J-3	S103	J-1
✱D101	J-2	FS62	N	E-1	FS140	N	J-5	S203	A-1
✱D102	J-1	FS63		D-3	FS141		J-5		
✱D103	C-3	FS64		E-3	FS142		J-1	✱TH1	G-2
✱D201	A-2	FS65		E-3	FS143		J-1	✱TH2	C-2
✱D202	A-1	FS66		D-4	FS144		J-1		
✱D203	A-3	FS68		E-4	FS145		J-2	TP106	H-1
✱D301	C-5	FS69		D-4	FS146	N	J-2	TP206	A-1
✱D302	D-4	FS70		D-4	FS147	N	J-2		
✱D303	B-3	FS72	N	E-1	FS148	N	J-3	X301	D-3
✱D304	B-5	FS73	N	E-2	FS149	N	J-3		
✱D305	B-3	FS74	N	E-3	FS150		J-4		
✱D306	A-5	FS75	N	F-3	FS152		H-2		
		FS76	N	E-3	FS153	N	E-1		
E106	H-1	FS77	N	F-3	FS154	N	F-1		
E206	A-1	FS78		E-4	FS155		J-5		
		FS79		E-4	FS156	N	J-4		
FS1	A-1	FS80		F-4					
FS2	A-1	FS81		E-5	IC1		E-4		
FS3	A-1	FS82		E-5	IC3		D-5		
FS4	A-2	FS83		F-1	IC5		B-5		
FS5	A-2	FS84	N	F-1	IC6		B-5		
FS6	A-5	FS85		F-1	IC7		C-5		
FS7	A-2	FS86	N	F-1	IC101		J-2		
FS8	A-2	FS87		F-1	IC102		J-2		
FS9	A-2	FS88	N	F-2	IC103		H-2		
FS10	A-5	FS89	N	F-2	IC104		G-2		
FS11	A-5	FS90	N	F-2	IC201		A-2		
FS12	A-5	FS91	N	F-3	IC202		B-2		
FS13	B-1	FS92	N	F-3	IC203		C-2		
FS14	B-2	FS93	N	F-3	IC204		D-2		
FS15	B-5	FS94	N	F-4	IC301		D-3		
FS16	B-5	FS95	N	F-4	IC302		D-4		
FS17	A-5	FS96	N	F-4	IC303		C-4		
FS18	A-5	FS97		F-4	IC304		C-3		
FS19	A-5	FS98	N	F-5	IC305		D-3		
FS20	B-1	FS99	N	F-5	IC306		C-3		
FS21	B-2	FS100		F-5	IC307		C-5		
FS22	B-2	FS101		F-5	IC308		C-4		
FS23	B-3	FS102		F-5	IC309		B-5		
FS24	B-3	FS103		F-5					
FS25	B-4	FS104		F-5	LV101		C-2		
FS26	B-5	FS105		F-5	LV201		A-2		
FS27	B-1	FS106		F-5					
FS28	B-2	FS107		G-1	PS1		H-5		
FS29	C-2	FS108		G-1	PS2		H-5		
FS30	B-5	FS109		G-2					
FS31	B-5	FS110		G-2	✱Q1		E-5		
FS32	B-5	FS111	N	G-2	✱Q2		E-5		
FS33	B-5	FS112	N	G-2	✱Q3	N	E-5		
FS34	C-1	FS113		G-3	✱Q4	N	E-5		
FS35	C-2	FS114	N	G-3	✱Q5	N	F-5		
FS36	C-2	FS115	N	G-3	✱Q101		G-1		
FS37	C-5	FS116	N	G-4	✱Q102		E-4		
FS38	C-5	FS117		G-4	✱Q103		G-2		
FS39	C-5	FS118	N	G-4	Q104		C-4		
FS40	C-1	FS119	N	G-5	Q105		B-4		
FS41	C-1	FS120		G-5	✱Q201		C-1		
FS42	C-2	FS121		G-5	✱Q202		E-4		
FS43	C-2	FS122		H-1	✱Q203		C-1		
FS44	C-3	FS123		H-1	Q204		A-4		
FS45	C-3	FS124		J-1	Q205		A-4		
FS46	C-3	FS125		H-2	✱Q301		B-3		
FS47	C-3	FS126		H-2	Q302		C-5		
FS48	C-3	FS127		H-2	✱Q303		B-3		
FS49	C-4	FS128	N	H-4	Q304		A-5		
FS50	C-4	FS129		J-1	Q305		C-5		
FS51	C-5	FS130		J-1	Q306		A-5		
FS52	N D-1	FS131		J-1					
FS54	D-3	FS132		J-2	RV106		J-1		
FS55	D-3	FS133		J-2	RV107		H-1		
FS56	D-3	FS134		J-2	RV206		A-1		
FS57	D-4	FS135		H-2	RV207		B-1		
FS58	D-4	FS136		J-2	RV301		B-4		

✱ : B SIDE
N : UVW-1400 ONLY

AR-14A/14AP (1/4)

AR-14A/14AP(1/4);LTC REC

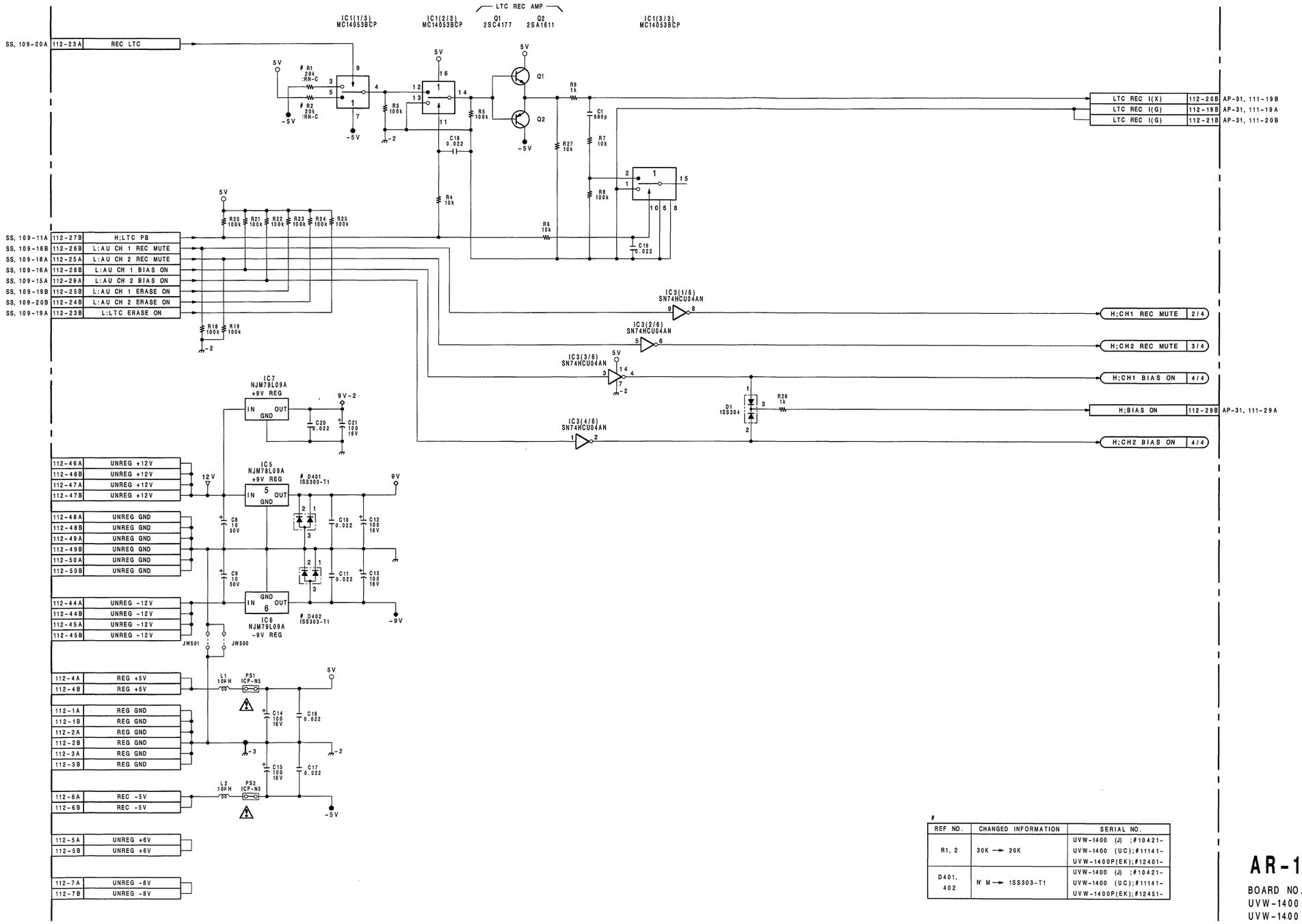

# REF NO.	CHANGED INFORMATION	SERIAL NO.
R1, 2	30K → 20K	UVW-1400 (J) ;#10421- UVW-1400 (UC);#11141- UVW-1400P(EK);#12401-
D401, 402	N' M → 1SS303-T1	UVW-1400 (J) ;#10421- UVW-1400 (UC);#11141- UVW-1400P(EK);#12451-

AR-14A/14AP BOARD (1/4)

BOARD NO.1-648-907-21, 22
UVW-1400 (J) ;#10001-
UVW-1400 (UC) ;#10001-
UVW-1400P (EK) ;#10001-

AR-14A/14AP (1-648-907-21,22)

CN112	E-5	FS59		D-4	FS137		J-2	RV302	B-4
		FS60		D-5	FS138	N	J-3		
✱D1	D-5	FS61		D-1	FS139	N	J-3	S103	J-1
✱D101	J-2	FS62	N	E-1	FS140	N	J-5	S203	A-1
✱D102	J-1	FS63		D-3	FS141		J-5		
✱D103	C-3	FS64		E-3	FS142		J-1	✱TH1	G-2
✱D201	A-2	FS65		E-3	FS143		J-1	✱TH2	C-2
✱D202	A-1	FS66		D-4	FS144		J-1		
✱D203	A-3	FS68		E-4	FS145		J-2	TP106	H-1
✱D301	C-5	FS69		D-4	FS146	N	J-2	TP206	A-1
✱D302	D-4	FS70		D-4	FS147	N	J-2		
✱D303	B-3	FS72	N	E-1	FS148	N	J-3	X301	D-3
✱D304	B-5	FS73	N	E-2	FS149	N	J-3		
✱D305	B-3	FS74	N	E-3	FS150		J-4		
✱D306	A-5	FS75	N	F-3	FS152		H-2		
		FS76	N	E-3	FS153	N	E-1		
E106	H-1	FS77	N	F-3	FS154	N	F-1		
E206	A-1	FS78		E-4	FS155		J-5		
		FS79		E-4	FS156	N	J-4		
FS1	A-1	FS80		F-4					
FS2	A-1	FS81		E-5	IC1		E-4		
FS3	A-1	FS82		E-5	IC3		D-5		
FS4	A-2	FS83		F-1	IC5		B-5		
FS5	A-2	FS84	N	F-1	IC6		B-5		
FS6	A-5	FS85		F-1	IC7		C-5		
FS7	A-2	FS86	N	F-1	IC101		J-2		
FS8	A-2	FS87		F-1	IC102		J-2		
FS9	A-2	FS88	N	F-2	IC103		H-2		
FS10	A-5	FS89	N	F-2	IC104		G-2		
FS11	A-5	FS90	N	F-2	IC201		A-2		
FS12	A-5	FS91	N	F-3	IC202		B-2		
FS13	B-1	FS92	N	F-3	IC203		C-2		
FS14	B-2	FS93	N	F-3	IC204		D-2		
FS15	B-5	FS94	N	F-4	IC301		D-3		
FS16	B-5	FS95	N	F-4	IC302		D-4		
FS17	A-5	FS96	N	F-4	IC303		C-4		
FS18	A-5	FS97		F-4	IC304		C-3		
FS19	A-5	FS98	N	F-5	IC305		D-3		
FS20	B-1	FS99	N	F-5	IC306		C-3		
FS21	B-2	FS100		F-5	IC307		C-5		
FS22	B-2	FS101		F-5	IC308		C-4		
FS23	B-3	FS102		F-5	IC309		B-5		
FS24	B-3	FS103		F-5					
FS25	B-4	FS104		F-5	LV101		C-2		
FS26	B-5	FS105		F-5	LV201		A-2		
FS27	B-1	FS106		F-5					
FS28	B-2	FS107		G-1	PS1		H-5		
FS29	C-2	FS108		G-1	PS2		H-5		
FS30	B-5	FS109		G-2					
FS31	B-5	FS110		G-2	✱Q1		E-5		
FS32	B-5	FS111	N	G-2	✱Q2		E-5		
FS33	B-5	FS112	N	G-2	✱Q3	N	E-5		
FS34	C-1	FS113		G-3	✱Q4	N	E-5		
FS35	C-2	FS114	N	G-3	✱Q5	N	F-5		
FS36	C-2	FS115	N	G-3	✱Q101		G-1		
FS37	C-5	FS116	N	G-4	✱Q102		E-4		
FS38	C-5	FS117		G-4	✱Q103		G-2		
FS39	C-5	FS118	N	G-4	Q104		C-4		
FS40	C-1	FS119	N	G-5	Q105		B-4		
FS41	C-1	FS120		G-5	✱Q201		C-1		
FS42	C-2	FS121		G-5	✱Q202		E-4		
FS43	C-2	FS122		H-1	✱Q203		C-1		
FS44	C-3	FS123		H-1	Q204		A-4		
FS45	C-3	FS124		J-1	Q205		A-4		
FS46	C-3	FS125		H-2	✱Q301		B-3		
FS47	C-3	FS126		H-2	Q302		C-5		
FS48	C-3	FS127		H-2	✱Q303		B-3		
FS49	C-4	FS128	N	H-4	Q304		A-5		
FS50	C-4	FS129		J-1	Q305		C-5		
FS51	C-5	FS130		J-1	Q306		A-5		
FS52	N D-1	FS131		J-1					
FS54	D-3	FS132		J-2	RV106		J-1		
FS55	D-3	FS133		J-2	RV107		H-1		
FS56	D-3	FS134		J-2	RV206		A-1		
FS57	D-4	FS135		H-2	RV207		B-1		
FS58	D-4	FS136		J-2	RV301		B-4		

✱ : B SIDE
N : UVW-1400 ONLY

AR-14A/14AP(2/4);CH-1 REC/BIAS DRIVE

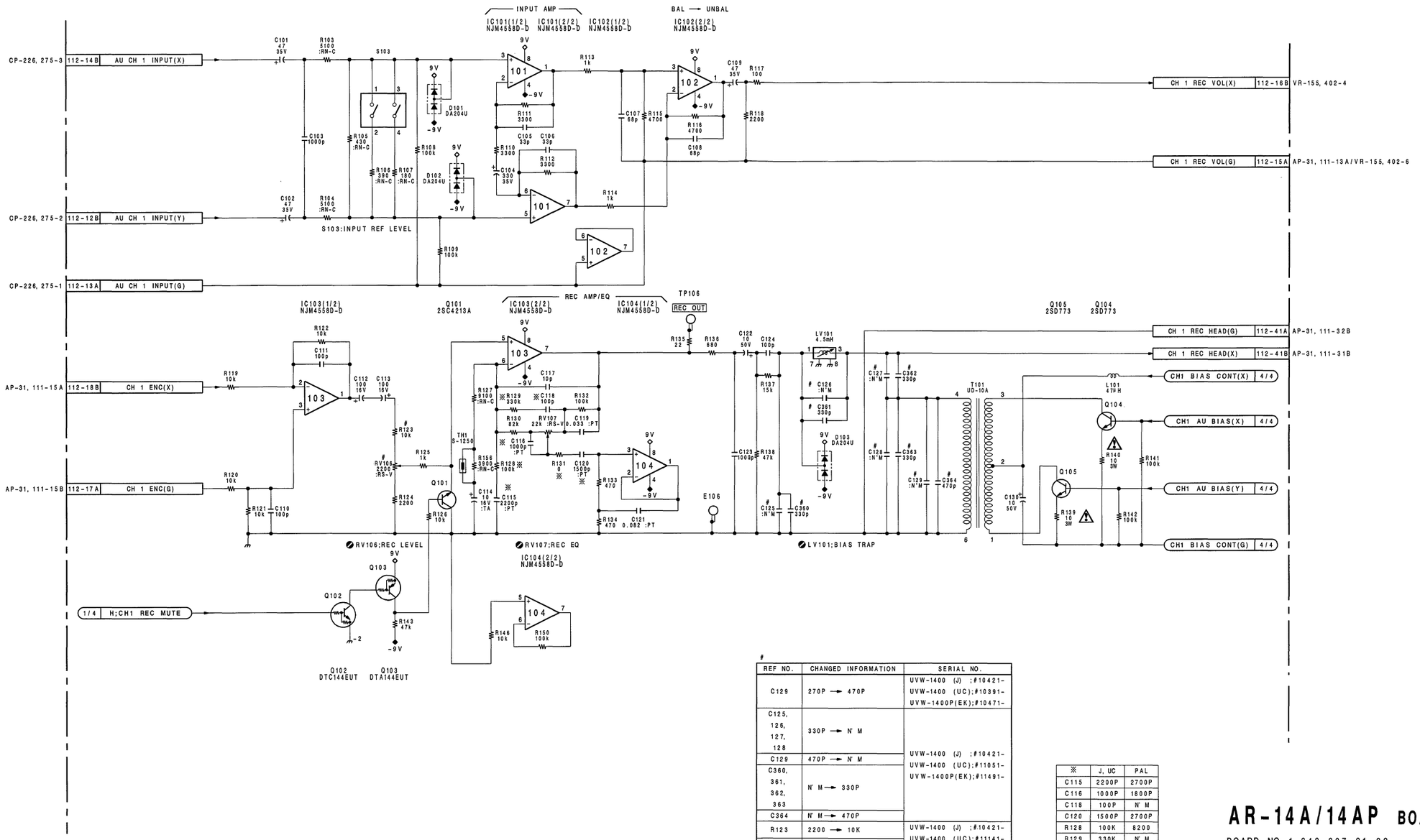

# REF NO.	CHANGED INFORMATION	SERIAL NO.
C129	270P → 470P	UVW-1400 (J) ;#10421- UVW-1400 (UC);#10391- UVW-1400P(EK);#10471-
C125, 126, 127, 128	330P → N M	UVW-1400 (J) ;#10421- UVW-1400 (UC);#11051- UVW-1400P(EK);#11491-
C129	470P → N M	
C360, 361, 362, 363	N M → 330P	
C364	N M → 470P	
R123	2200 → 10K	UVW-1400 (J) ;#10421- UVW-1400 (UC);#11141- UVW-1400P(EK);#12401-
RV106	10K → 2200	

※	J, UC	PAL
C115	2200P	2700P
C116	1000P	1800P
C118	100P	N M
C120	1500P	2700P
R128	100K	8200
R129	330K	N M
R131	0	0

AR-14A/14AP BOARD (2/4)

BOARD NO.1-648-907-21, 22
UVW-1400 (J) ;#10001-
UVW-1400 (UC) ;#10001-
UVW-1400P (EK) ;#10001-

AR-14A/14AP (1-648-907-21,22)

CN112	E-5	FS59		D-4	FS137		J-2	RV302	B-4
		FS60		D-5	FS138	N	J-3		
✱D1	D-5	FS61		D-1	FS139	N	J-3	S103	J-1
✱D101	J-2	FS62	N	E-1	FS140	N	J-5	S203	A-1
✱D102	J-1	FS63		D-3	FS141		J-5		
✱D103	C-3	FS64		E-3	FS142		J-1	✱TH1	G-2
✱D201	A-2	FS65		E-3	FS143		J-1	✱TH2	C-2
✱D202	A-1	FS66		D-4	FS144		J-1		
✱D203	A-3	FS68		E-4	FS145		J-2	TP106	H-1
✱D301	C-5	FS69		D-4	FS146	N	J-2	TP206	A-1
✱D302	D-4	FS70		D-4	FS147	N	J-2		
✱D303	B-3	FS72	N	E-1	FS148	N	J-3	X301	D-3
✱D304	B-5	FS73	N	E-2	FS149	N	J-3		
✱D305	B-3	FS74	N	E-3	FS150		J-4		
✱D306	A-5	FS75	N	F-3	FS152		H-2		
		FS76	N	E-3	FS153	N	E-1		
E106	H-1	FS77	N	F-3	FS154	N	F-1		
E206	A-1	FS78		E-4	FS155		J-5		
		FS79		E-4	FS156	N	J-4		
FS1	A-1	FS80		F-4					
FS2	A-1	FS81		E-5	IC1		E-4		
FS3	A-1	FS82		E-5	IC3		D-5		
FS4	A-2	FS83		F-1	IC5		B-5		
FS5	A-2	FS84	N	F-1	IC6		B-5		
FS6	A-5	FS85		F-1	IC7		C-5		
FS7	A-2	FS86	N	F-1	IC101		J-2		
FS8	A-2	FS87		F-1	IC102		J-2		
FS9	A-2	FS88	N	F-2	IC103		H-2		
FS10	A-5	FS89	N	F-2	IC104		G-2		
FS11	A-5	FS90	N	F-2	IC201		A-2		
FS12	A-5	FS91	N	F-3	IC202		B-2		
FS13	B-1	FS92	N	F-3	IC203		C-2		
FS14	B-2	FS93	N	F-3	IC204		D-2		
FS15	B-5	FS94	N	F-4	IC301		D-3		
FS16	B-5	FS95	N	F-4	IC302		D-4		
FS17	A-5	FS96	N	F-4	IC303		C-4		
FS18	A-5	FS97		F-4	IC304		C-3		
FS19	A-5	FS98	N	F-5	IC305		D-3		
FS20	B-1	FS99	N	F-5	IC306		C-3		
FS21	B-2	FS100		F-5	IC307		C-5		
FS22	B-2	FS101		F-5	IC308		C-4		
FS23	B-3	FS102		F-5	IC309		B-5		
FS24	B-3	FS103		F-5					
FS25	B-4	FS104		F-5	LV101		C-2		
FS26	B-5	FS105		F-5	LV201		A-2		
FS27	B-1	FS106		F-5					
FS28	B-2	FS107		G-1	PS1		H-5		
FS29	C-2	FS108		G-1	PS2		H-5		
FS30	B-5	FS109		G-2					
FS31	B-5	FS110		G-2	✱Q1		E-5		
FS32	B-5	FS111	N	G-2	✱Q2		E-5		
FS33	B-5	FS112	N	G-2	✱Q3	N	E-5		
FS34	C-1	FS113		G-3	✱Q4	N	E-5		
FS35	C-2	FS114	N	G-3	✱Q5	N	F-5		
FS36	C-2	FS115	N	G-3	✱Q101		G-1		
FS37	C-5	FS116	N	G-4	✱Q102		E-4		
FS38	C-5	FS117		G-4	✱Q103		G-2		
FS39	C-5	FS118	N	G-4	Q104		C-4		
FS40	C-1	FS119	N	G-5	Q105		B-4		
FS41	C-1	FS120		G-5	✱Q201		C-1		
FS42	C-2	FS121		G-5	✱Q202		E-4		
FS43	C-2	FS122		H-1	✱Q203		C-1		
FS44	C-3	FS123		H-1	Q204		A-4		
FS45	C-3	FS124		J-1	Q205		A-4		
FS46	C-3	FS125		H-2	✱Q301		B-3		
FS47	C-3	FS126		H-2	Q302		C-5		
FS48	C-3	FS127		H-2	✱Q303		B-3		
FS49	C-4	FS128	N	H-4	Q304		A-5		
FS50	C-4	FS129		J-1	Q305		C-5		
FS51	C-5	FS130		J-1	Q306		A-5		
FS52	N D-1	FS131		J-1					
FS54	D-3	FS132		J-2	RV106		J-1		
FS55	D-3	FS133		J-2	RV107		H-1		
FS56	D-3	FS134		J-2	RV206		A-1		
FS57	D-4	FS135		H-2	RV207		B-1		
FS58	D-4	FS136		J-2	RV301		B-4		

✱ : B SIDE
N : UVW-1400 ONLY

AP-14A/14AP(3/4);CH-2 REC/BIAS DRIVE

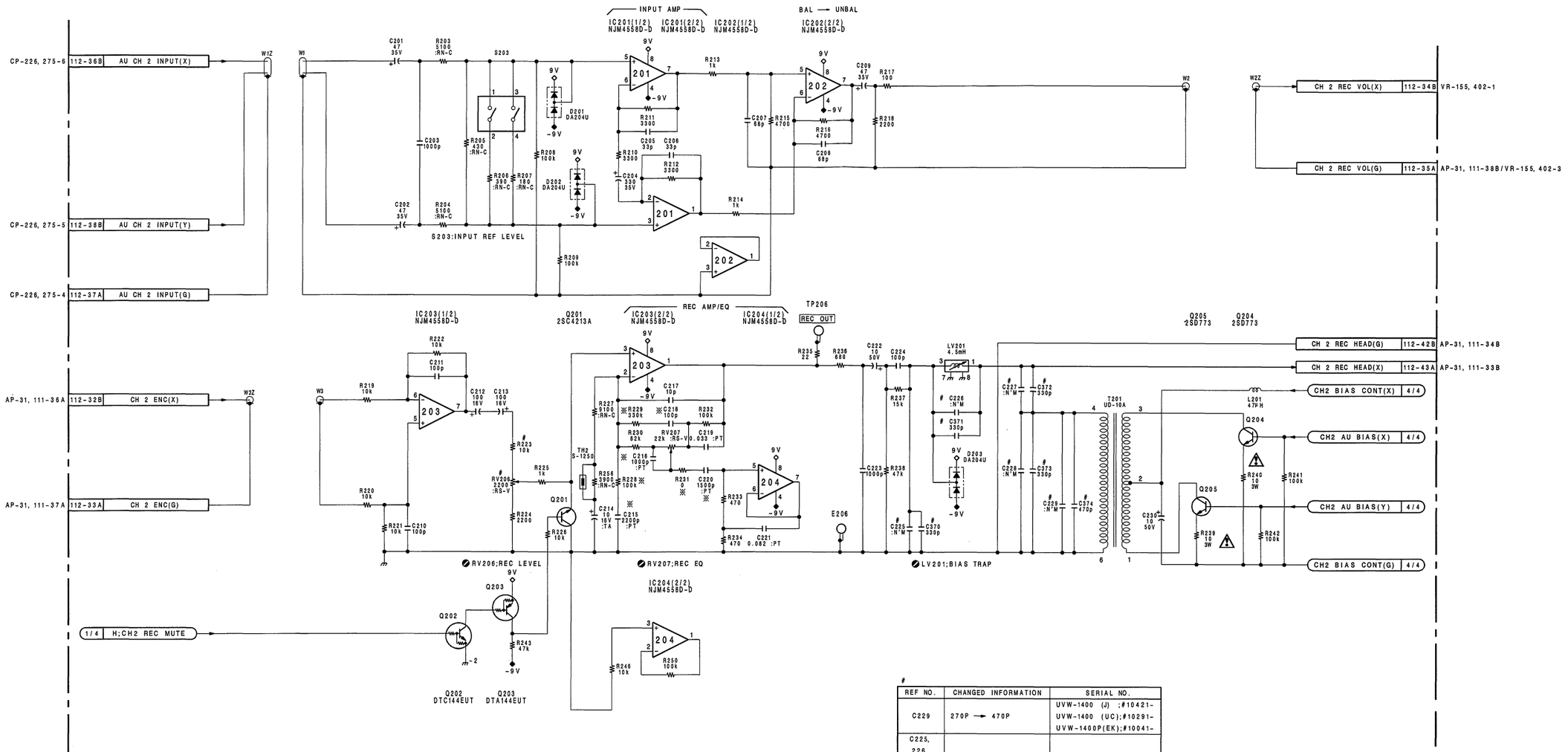

REF NO.	CHANGED INFORMATION	SERIAL NO.
C229	270P → 470P	UVW-1400 (J) ;#10421- UVW-1400 (UC);#10291- UVW-1400P(EK);#10041-
C225, 226, 227, 228	330P → N' M	UVW-1400 (J) ;#10421- UVW-1400 (UC);#11051- UVW-1400P(EK);#11491-
C229	470P → N' M	
C370, 371, 372, 373	N' M → 330P	
C374	N' M → 470P	
R223	2200 → 10K	UVW-1400 (J) ;#10421- UVW-1400 (UC);#11141- UVW-1400P(EK);#12401-
RV206	10K → 2200	

※	J, UC	PAL
C215	2200P	2700P
C216	1000P	1800P
C218	100P	N' M
C220	1500P	2700P
R228	100K	8200
R229	330K	N' M
R231	0	0

AR-14A/14AP BOARD (3/4)

BOARD NO.1-648-907-21, 22
UVW-1400 (J) ;#10001-
UVW-1400 (UC) ;#10001-
UVW-1400P (EK) ;#10001-

AR-14A/14AP (1-648-907-21,22)

CN112	E-5	FS59		D-4	FS137		J-2	RV302	B-4
		FS60		D-5	FS138	N	J-3		
✱D1	D-5	FS61		D-1	FS139	N	J-3	S103	J-1
✱D101	J-2	FS62	N	E-1	FS140	N	J-5	S203	A-1
✱D102	J-1	FS63		D-3	FS141		J-5		
✱D103	C-3	FS64		E-3	FS142		J-1	✱TH1	G-2
✱D201	A-2	FS65		E-3	FS143		J-1	✱TH2	C-2
✱D202	A-1	FS66		D-4	FS144		J-1		
✱D203	A-3	FS68		E-4	FS145		J-2	TP106	H-1
✱D301	C-5	FS69		D-4	FS146	N	J-2	TP206	A-1
✱D302	D-4	FS70		D-4	FS147	N	J-2		
✱D303	B-3	FS72	N	E-1	FS148	N	J-3	X301	D-3
✱D304	B-5	FS73	N	E-2	FS149	N	J-3		
✱D305	B-3	FS74	N	E-3	FS150		J-4		
✱D306	A-5	FS75	N	F-3	FS152		H-2		
		FS76	N	E-3	FS153	N	E-1		
E106	H-1	FS77	N	F-3	FS154	N	F-1		
E206	A-1	FS78		E-4	FS155		J-5		
		FS79		E-4	FS156	N	J-4		
FS1	A-1	FS80		F-4					
FS2	A-1	FS81		E-5	IC1		E-4		
FS3	A-1	FS82		E-5	IC3		D-5		
FS4	A-2	FS83		F-1	IC5		B-5		
FS5	A-2	FS84	N	F-1	IC6		B-5		
FS6	A-5	FS85		F-1	IC7		C-5		
FS7	A-2	FS86	N	F-1	IC101		J-2		
FS8	A-2	FS87		F-1	IC102		J-2		
FS9	A-2	FS88	N	F-2	IC103		H-2		
FS10	A-5	FS89	N	F-2	IC104		G-2		
FS11	A-5	FS90	N	F-2	IC201		A-2		
FS12	A-5	FS91	N	F-3	IC202		B-2		
FS13	B-1	FS92	N	F-3	IC203		C-2		
FS14	B-2	FS93	N	F-3	IC204		D-2		
FS15	B-5	FS94	N	F-4	IC301		D-3		
FS16	B-5	FS95	N	F-4	IC302		D-4		
FS17	A-5	FS96	N	F-4	IC303		C-4		
FS18	A-5	FS97		F-4	IC304		C-3		
FS19	A-5	FS98	N	F-5	IC305		D-3		
FS20	B-1	FS99	N	F-5	IC306		C-3		
FS21	B-2	FS100		F-5	IC307		C-5		
FS22	B-2	FS101		F-5	IC308		C-4		
FS23	B-3	FS102		F-5	IC309		B-5		
FS24	B-3	FS103		F-5					
FS25	B-4	FS104		F-5	LV101		C-2		
FS26	B-5	FS105		F-5	LV201		A-2		
FS27	B-1	FS106		F-5					
FS28	B-2	FS107		G-1	PS1		H-5		
FS29	C-2	FS108		G-1	PS2		H-5		
FS30	B-5	FS109		G-2					
FS31	B-5	FS110		G-2	✱Q1		E-5		
FS32	B-5	FS111	N	G-2	✱Q2		E-5		
FS33	B-5	FS112	N	G-2	✱Q3	N	E-5		
FS34	C-1	FS113		G-3	✱Q4	N	E-5		
FS35	C-2	FS114	N	G-3	✱Q5	N	F-5		
FS36	C-2	FS115	N	G-3	✱Q101		G-1		
FS37	C-5	FS116	N	G-4	✱Q102		E-4		
FS38	C-5	FS117		G-4	✱Q103		G-2		
FS39	C-5	FS118	N	G-4	Q104		C-4		
FS40	C-1	FS119	N	G-5	Q105		B-4		
FS41	C-1	FS120		G-5	✱Q201		C-1		
FS42	C-2	FS121		G-5	✱Q202		E-4		
FS43	C-2	FS122		H-1	✱Q203		C-1		
FS44	C-3	FS123		H-1	Q204		A-4		
FS45	C-3	FS124		J-1	Q205		A-4		
FS46	C-3	FS125		H-2	✱Q301		B-3		
FS47	C-3	FS126		H-2	Q302		C-5		
FS48	C-3	FS127		H-2	✱Q303		B-3		
FS49	C-4	FS128	N	H-4	Q304		A-5		
FS50	C-4	FS129		J-1	Q305		C-5		
FS51	C-5	FS130		J-1	Q306		A-5		
FS52	N D-1	FS131		J-1					
FS54	D-3	FS132		J-2	RV106		J-1		
FS55	D-3	FS133		J-2	RV107		H-1		
FS56	D-3	FS134		J-2	RV206		A-1		
FS57	D-4	FS135		H-2	RV207		B-1		
FS58	D-4	FS136		J-2	RV301		B-4		

✱ : B SIDE
N : UVW-1400 ONLY

AR-14A/14AP (4/4)

AR-14A/14AP(4/4);BIAS OSC

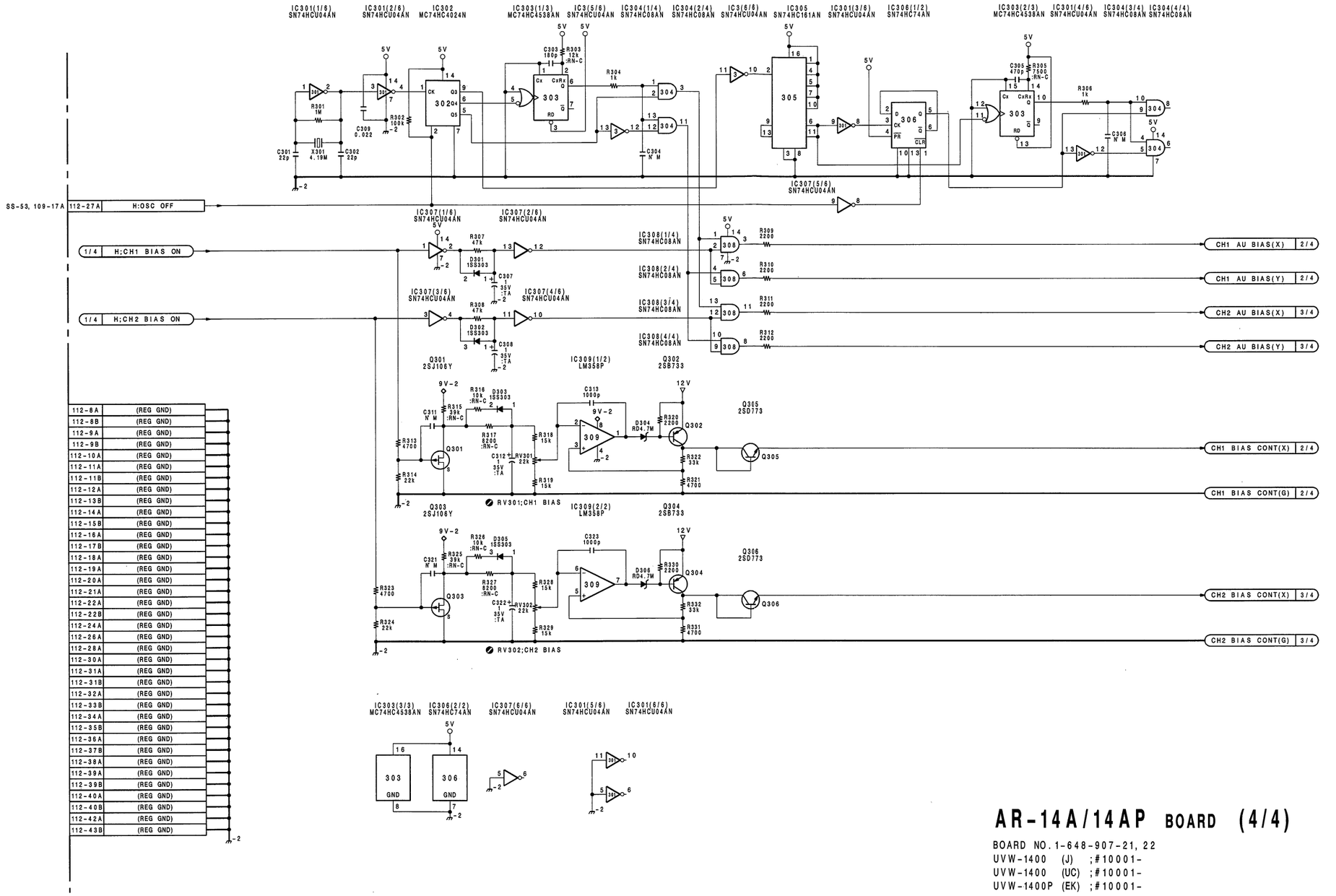

AR-14A/14AP BOARD (4/4)

BOARD NO.1-648-907-21, 22
UVW-1400 (J) ;#10001-
UVW-1400 (UC) ;#10001-
UVW-1400P (EK) ;#10001-

CP-225B;VIDEO INPUT/OUTPUT CONNECTOR
CP-225C;VIDEO OUTPUT CONNECTOR

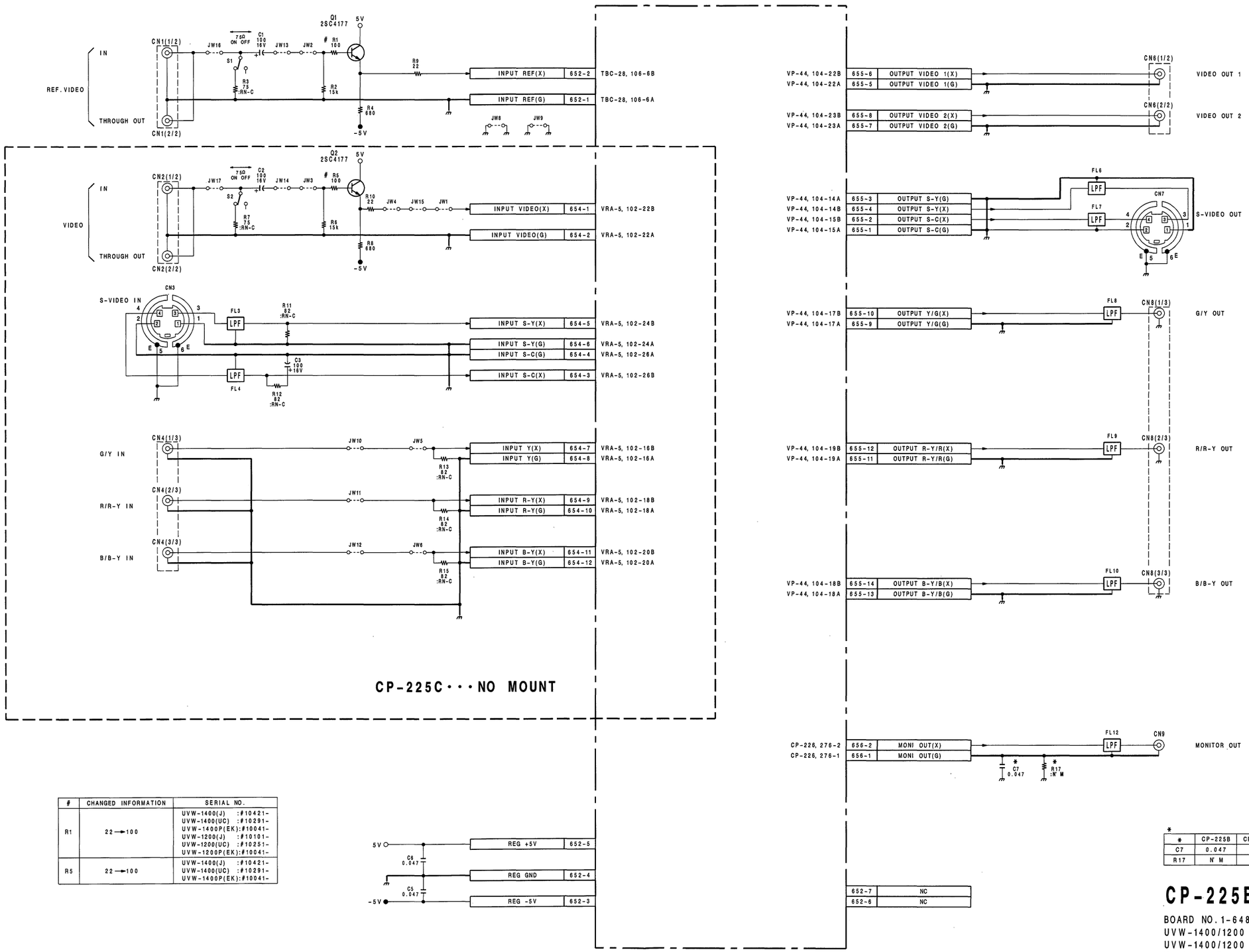

#	CHANGED INFORMATION	SERIAL NO.
R1	22→100	UVW-1400(J) :#10421- UVW-1400(UC) :#10291- UVW-1400P(EK):#10041- UVW-1200(J) :#10101- UVW-1200(UC) :#10251- UVW-1200P(EK):#10041-
R5	22→100	UVW-1400(J) :#10421- UVW-1400(UC) :#10291- UVW-1400P(EK):#10041-

*

*	CP-225B	CP-225C
C7	0.047	N M
R17	N M	0

CP-225B/225C BOARD

BOARD NO. 1-648-910-31, 41, 32.42
UVW-1400/1200 (J) ;#10001-
UVW-1400/1200 (UC) ;#10001-
UVW-1400P/1200P (EK) ;#10001-

CP-226/226J ;AUDIO INPUT/OUTPUT CONNECTOR, OUTPUT TRANSFORMER
CP-226A/226AJ ;AUDIO OUTPUT CONNECTOR, OUTPUT TRANSFORMER

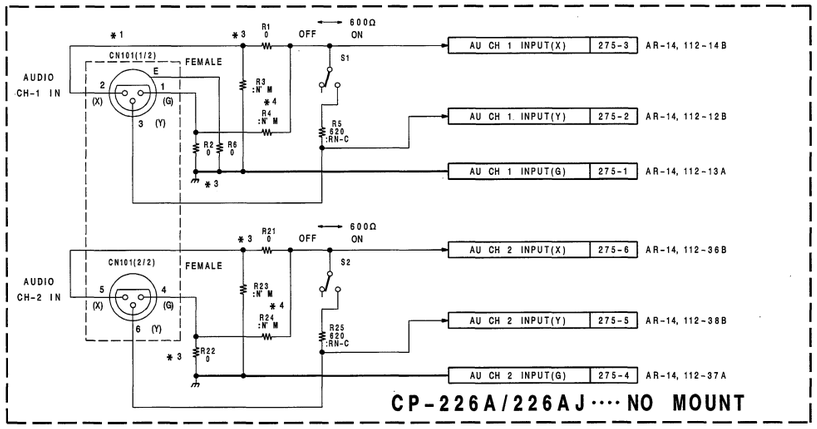

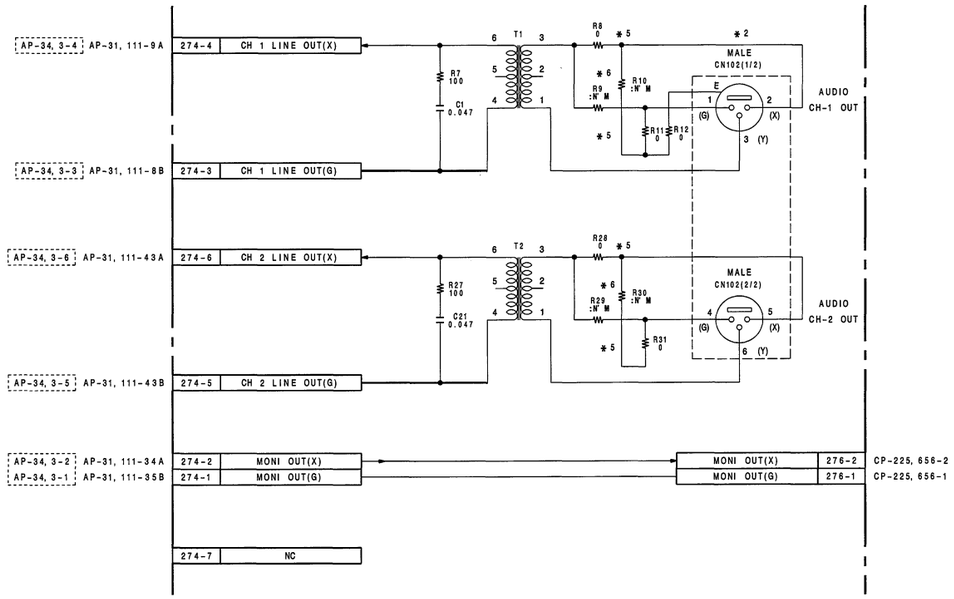

CP-226/226J

	REF. No	UC, EK	J
✱1	CN101	FEMALE	MALE
✱2	CN102	MALE	FEMALE
✱3	R1, 2, 21, 22	0	:NM
✱4	R3, 4, 23, 24	:NM	0
✱5	R8, 11, 28, 31	0	:NM
✱6	R9, 10, 29, 30	:NM	0

CP-226A/226AJ

	REF. No	UC, EK	J
✱2	CN102	MALE	FEMALE
✱5	R8, 11, 28, 31	0	:NM
✱6	R9, 10, 29, 30	:NM	0

NOTE; [ ] (CONNECTOR' S DESTINATION)
For UVW-1200/1200P

CP-226/226A/226J/226AJ BOARD

BOARD NO. 1-648-911-11, 21, 12, 22
UVW-1400/1200 (J) ;#10001-
UVW-1400/1200 (UC) ;#10001-
UVW-1400P/1200P (EK) ;#10001-

DR-214 (1/2)

DR-214 (1-648-908-11,12)

CN300	H-1
CN301	C-5
CN302	H-5
CN303	L-5
D1	G-2
D151	L-3
D152	K-3
D153	L-2
D154	M-3
D155	K-3
D156	L-2
D301	G-2
D302	J-4
D303	H-4
D304	H-2
D306	H-3
E1	K-1
E2	K-5
IC1	G-2
IC51	C-2
IC52	D-3
IC151	L-4
IC152	L-4
IC153	L-2
IC201	C-1
IC251	L-1
IC301	F-3
IC302	F-4
IC303	F-2
IC304	G-4
IC305	J-5
IC306	H-4
IC307	J-2
IC308	E-5
IC310	J-3
IC311	J-1
IC313	H-2
PS1	C-1
PS2	L-1
Q1	G-3
Q51	B-5
Q52	B-5
Q53	B-5
Q101	B-4
Q102	B-4
Q103	B-4
Q151	M-2
Q152	N-4
Q153	M-3
Q154	N-5
Q155	M-3
Q201	B-1
Q202	B-1
Q203	B-2
Q204	B-2
Q205	B-3
Q206	B-3
Q207	B-3
Q208	B-4
Q251	N-1
Q252	N-1
Q253	N-2
Q254	M-2
Q255	N-3
Q256	N-3
Q257	N-3
Q258	N-4
Q301	H-2
Q302	K-1
Q303	K-2

✱ : B SIDE

DR-214(1/2);DRUM/CAP/THREAD/REEL POS./CC/REEL MOTOR DRIVE

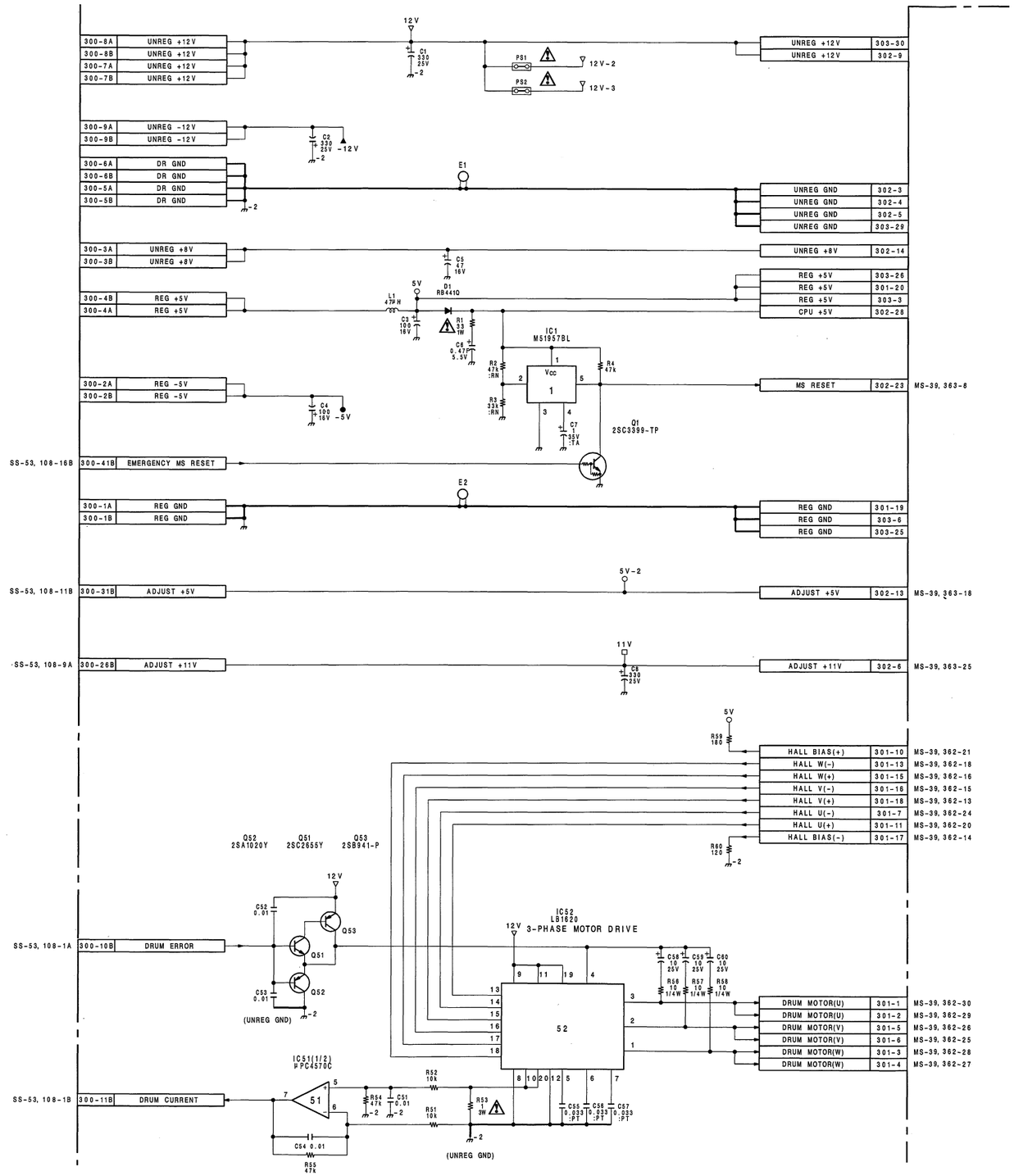

16-32

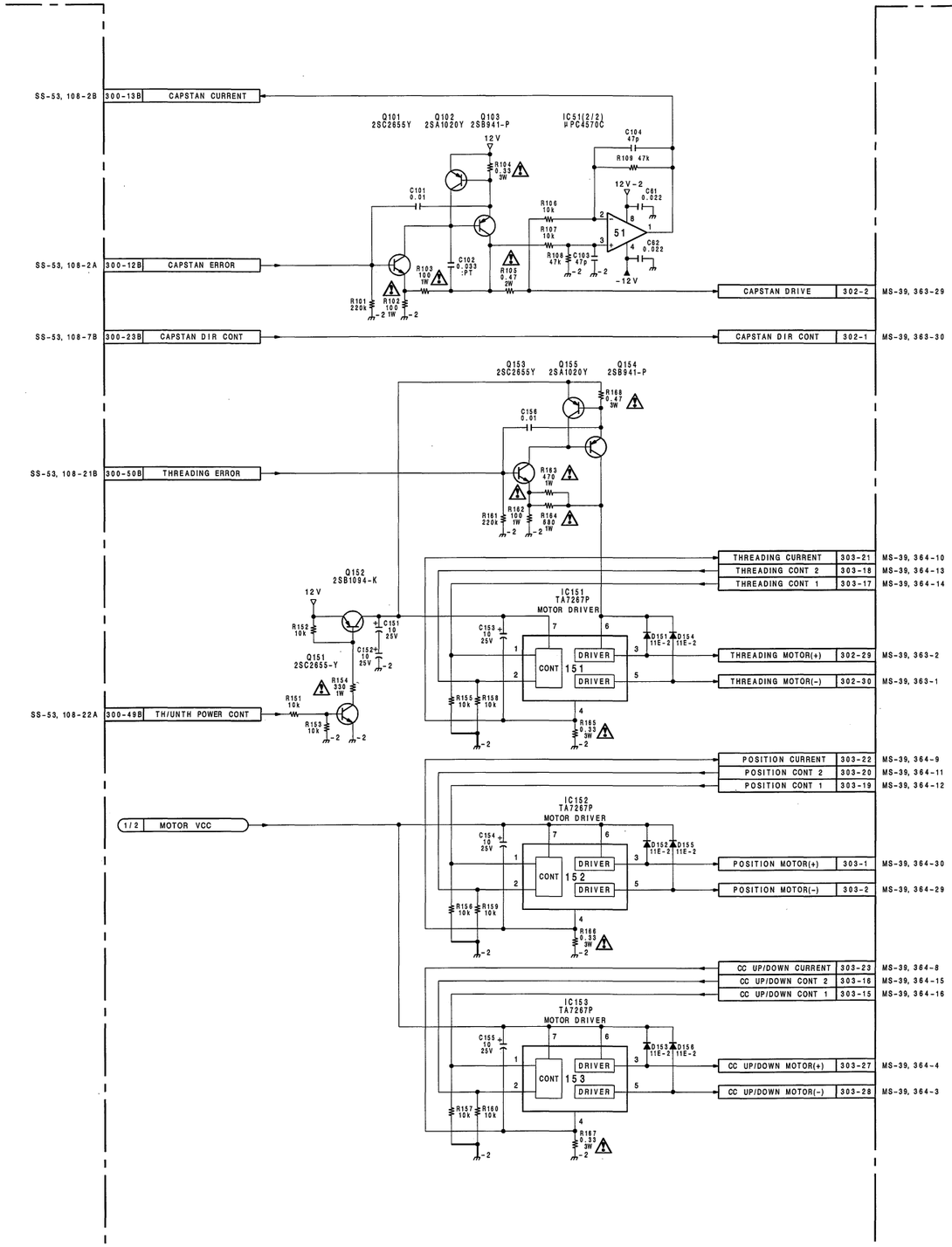

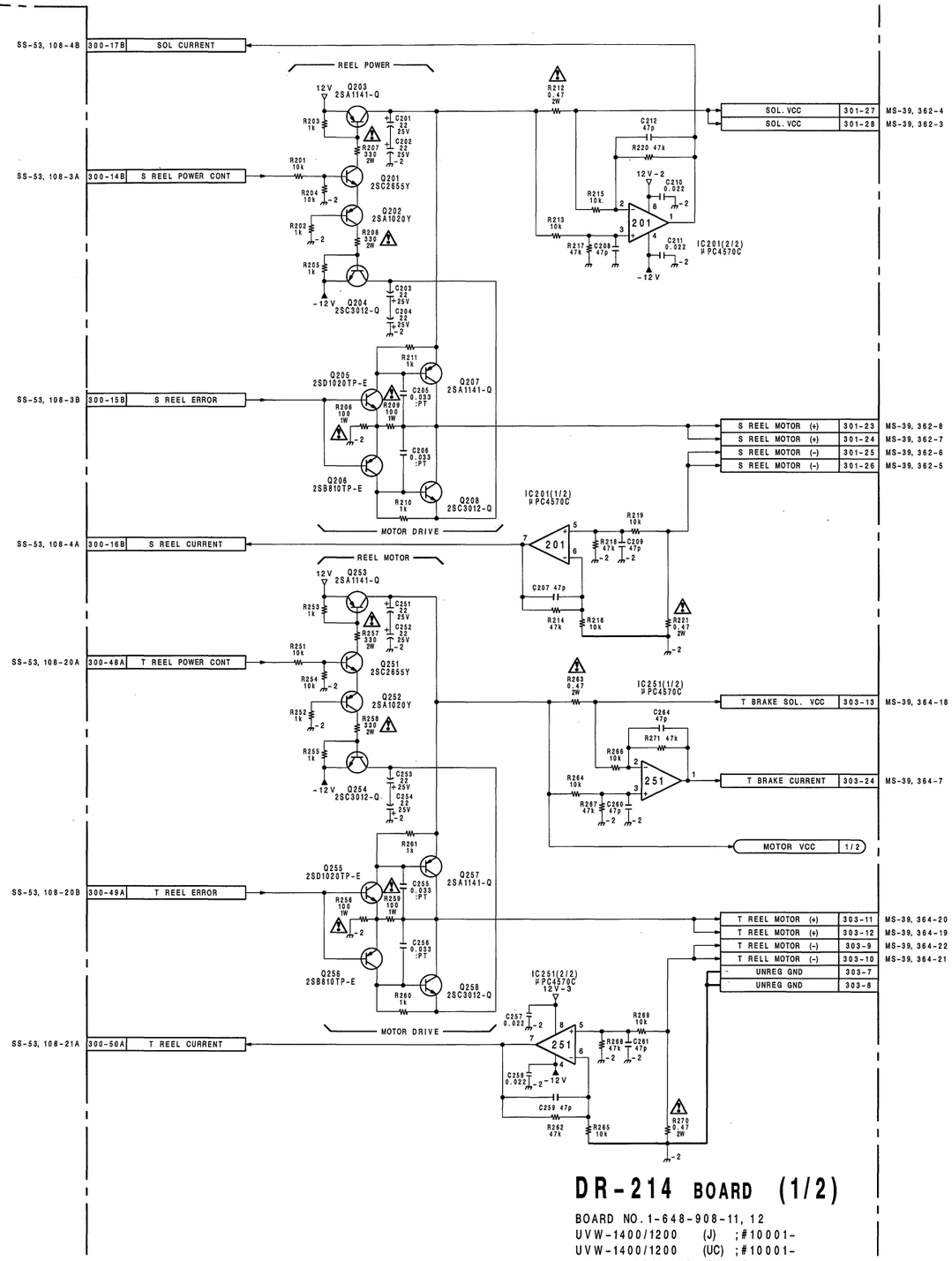

DR-214 BOARD (1/2)

BOARD NO. 1-648-908-11, 12
UVW-1400/1200 (J) ; #10001-
UVW-1400/1200 (UC) ; #10001-
UVW-1400P/1200P (EK) ; #10001-

DR-214 (2/2)

DR-214 (1-648-908-11,12)

CN300	H-1
CN301	C-5
CN302	H-5
CN303	L-5
D1	G-2
D151	L-3
D152	K-3
D153	L-2
D154	M-3
D155	K-3
D156	L-2
D301	G-2
D302	J-4
D303	H-4
D304	H-2
D306	H-3
E1	K-1
E2	K-5
IC1	G-2
IC51	C-2
IC52	D-3
IC151	L-4
IC152	L-4
IC153	L-2
IC201	C-1
IC251	L-1
IC301	F-3
IC302	F-4
IC303	F-2
IC304	G-4
IC305	J-5
IC306	H-4
IC307	J-2
IC308	E-5
IC310	J-3
IC311	J-1
IC313	H-2
PS1	C-1
PS2	L-1
Q1	G-3
Q51	B-5
Q52	B-5
Q53	B-5
Q101	B-4
Q102	B-4
Q103	B-4
Q151	M-2
Q152	N-4
Q153	M-3
Q154	N-5
Q155	M-3
Q201	B-1
Q202	B-1
Q203	B-2
Q204	B-2
Q205	B-3
Q206	B-3
Q207	B-3
Q208	B-4
Q251	N-1
Q252	N-1
Q253	N-2
Q254	M-2
Q255	N-3
Q256	N-3
Q257	N-3
Q258	N-4
Q301	H-2
Q302	K-1
Q303	K-2

✱ : B SIDE

DR-214(2/2); CTL REC/PB, DRUM PG/FG AMP., CAPSTAN FG AMP., TENSION AMP., TAPE TOP/END DETECT

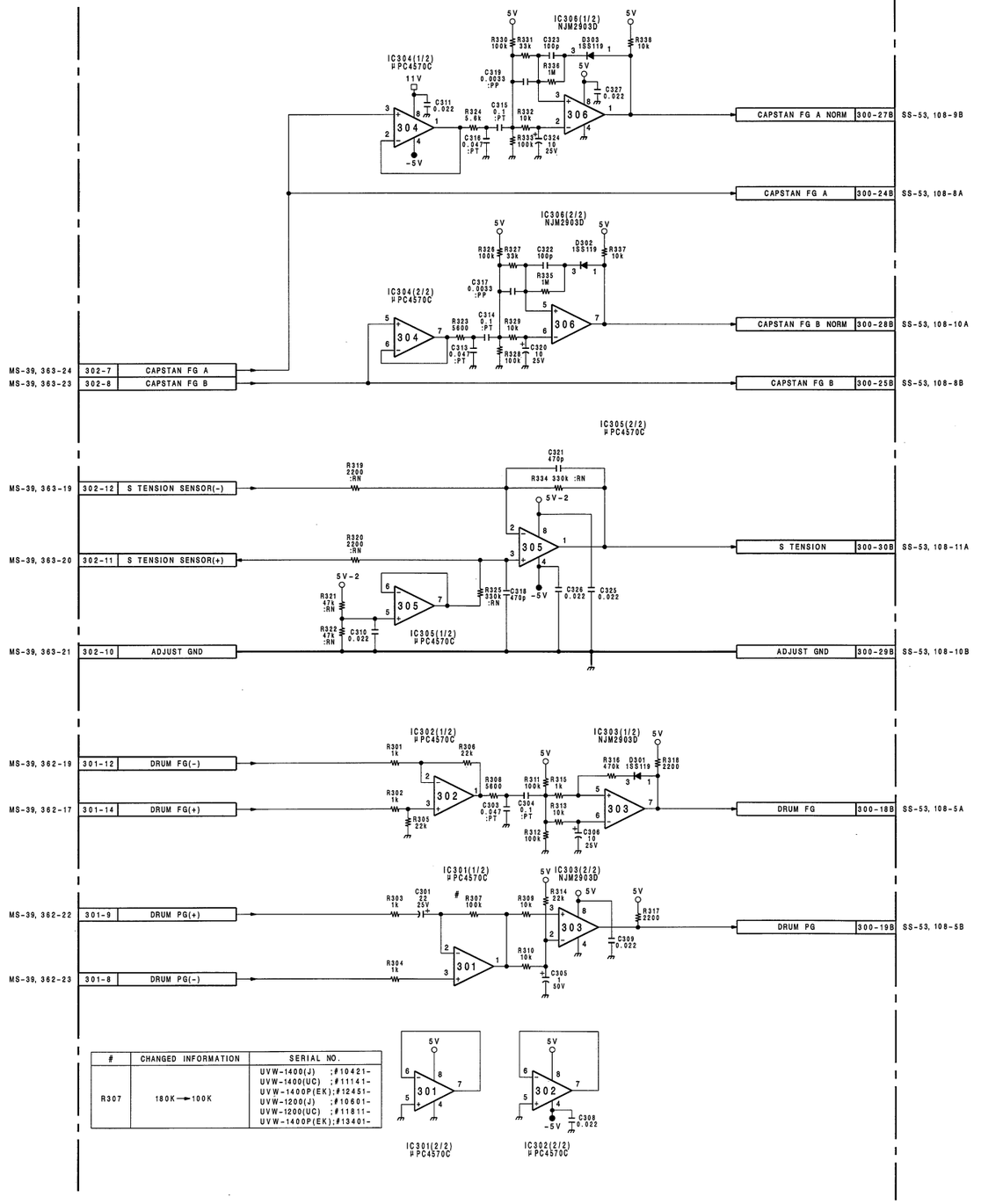

#	CHANGED INFORMATION	SERIAL NO.
R307	180K → 100K	UVW-1400(J) ;#10421- UVW-1400(UC) ;#11141- UVW-1400P(EK);#12451- UVW-1200(J) ;#10601- UVW-1200(UC) ;#11811- UVW-1400P(EK);#13401-

16-34

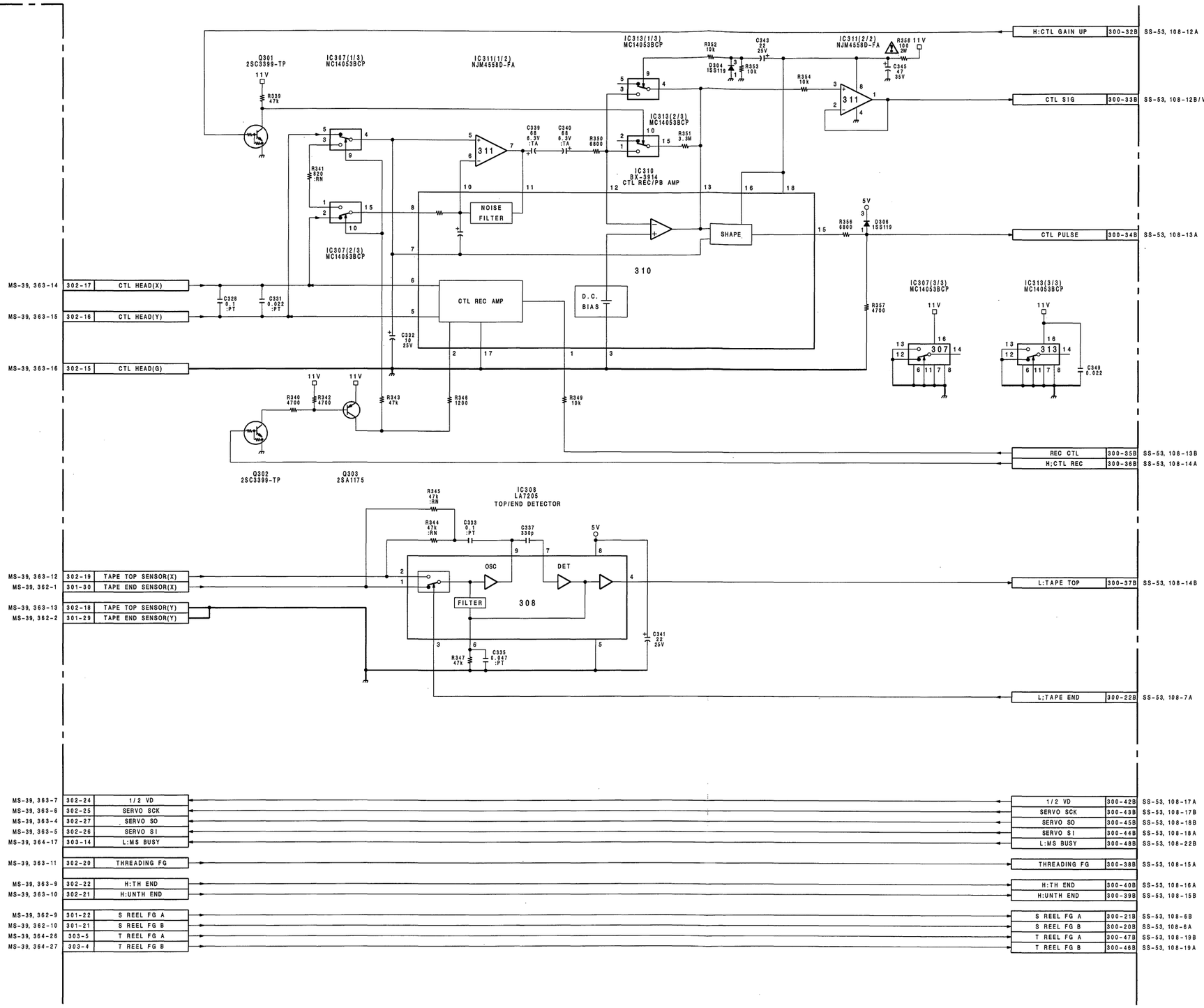

DR-214 BOARD (2/2)

BOARD NO. 1-648-908-11, 12
UVW-1400/1200 (J) ;#10001-
UVW-1400/1200 (UC) ;#10001-
UVW-1400P/1200P (EK) ;#10001-

KY-290(1-648-915-11)

CN590	N-3	S11	G-3
CN591	D-1	S12	J-3
CN592	P-3	S13	G-3
CN593	B-1	S14	G-3
		S15	G-2
*D1	N-2	S16	E-2
*D2	L-1	S17	F-2
*D3	K-1	S18	J-3
*D4	K-1	S20	E-3
*D5	J-2	S21	E-2
*D6	J-2	S22	F-3
*D7	J-2	S23	F-3
*D8	H-2		
*D9	H-3	X1	N-2
*D10	J-3		
*D11	J-3		
*D12	J-3		
IC1	L-2		
IC3	N-2		
IC6	M-3		
ND1	E-2		
*Q1	D-3		
*Q2	D-3		
*Q3	D-2		
*Q4	D-2		
*Q5	D-2		
*Q6	D-2		
*Q7	B-2		
*Q8	C-2		
*Q9	D-1		
*Q10	D-1		
*Q11	D-1		
*Q12	D-1		
*Q13	D-1		
*Q14	D-1		
*Q15	E-1		
*Q16	B-1		
*Q17	B-1		
*Q18	B-1		
*Q19	B-1		
*Q20	B-1		
*Q21	B-1		
*Q22	B-1		
*Q23	D-1		
*Q24	D-1		
*Q25	D-1		
*Q26	C-1		
*Q27	C-1		
*Q28	C-1		
*Q29	C-1		
*Q30	C-1		
*Q31	C-1		
*Q32	C-1		
*Q33	C-1		
*Q34	B-1		
*Q35	C-1		
*Q36	N-1		
*Q37	M-1		
*Q38	M-1		
*Q39	N-1		
*Q40	M-1		
*Q41	M-1		
*Q42	D-2		
S1	K-1		
S2	P-1		
S3	N-1		
S4	L-1		
S5	M-1		
S7	P-1		
S8	H-2		
S9	H-3		
S10	H-3		

*: B SIDE

KY-290;FUNCTION KEY, FL DISPLAY

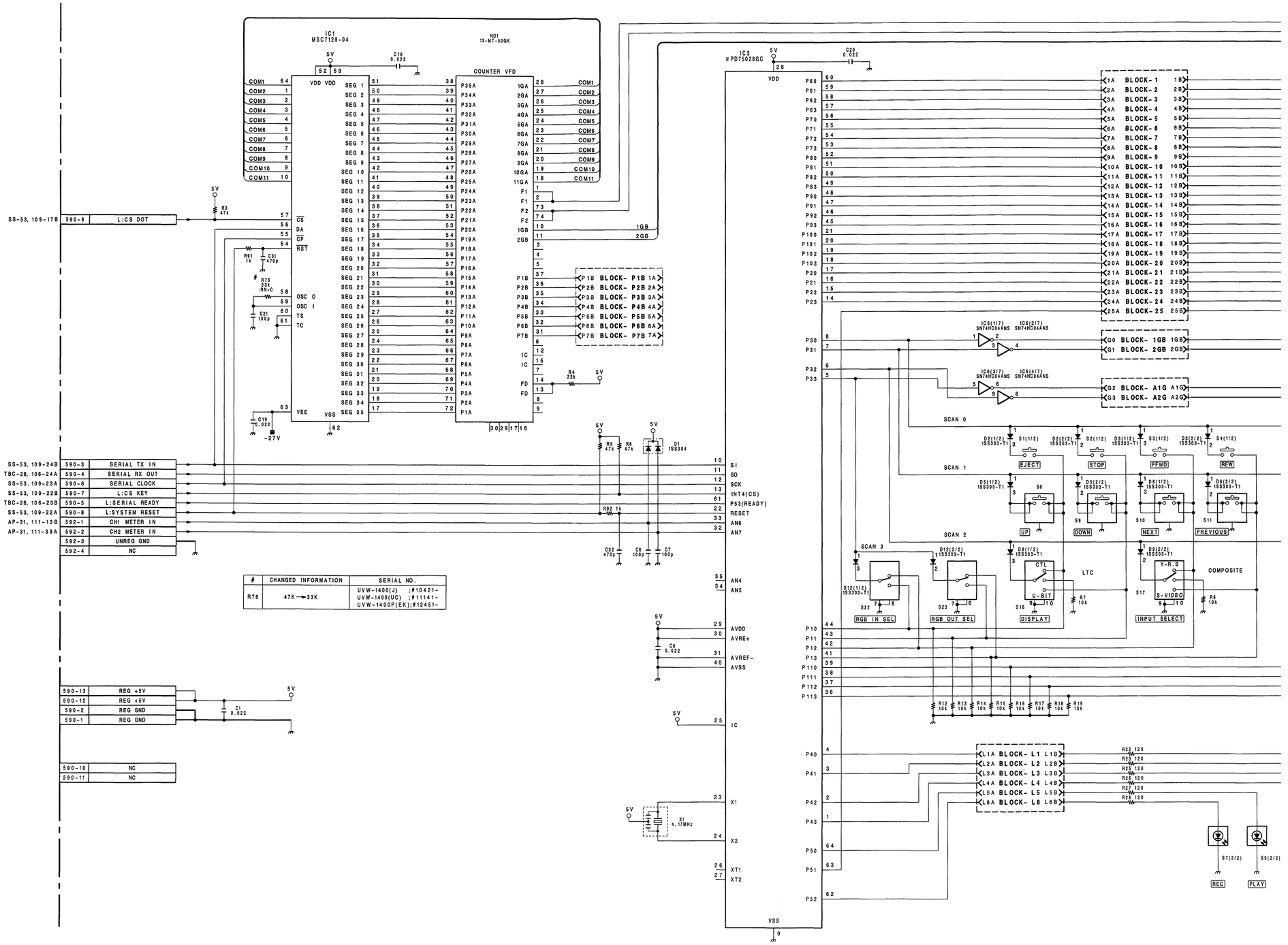

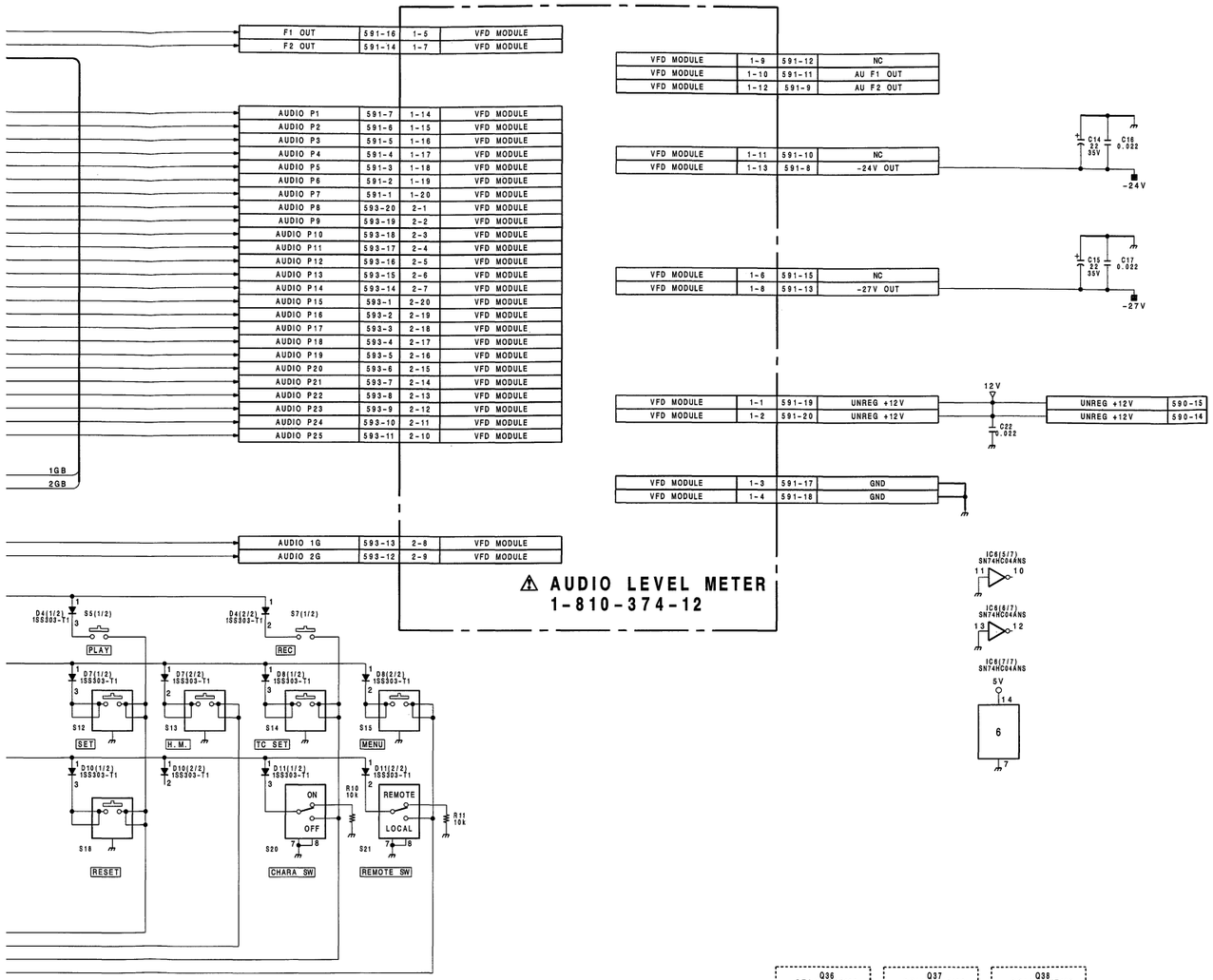

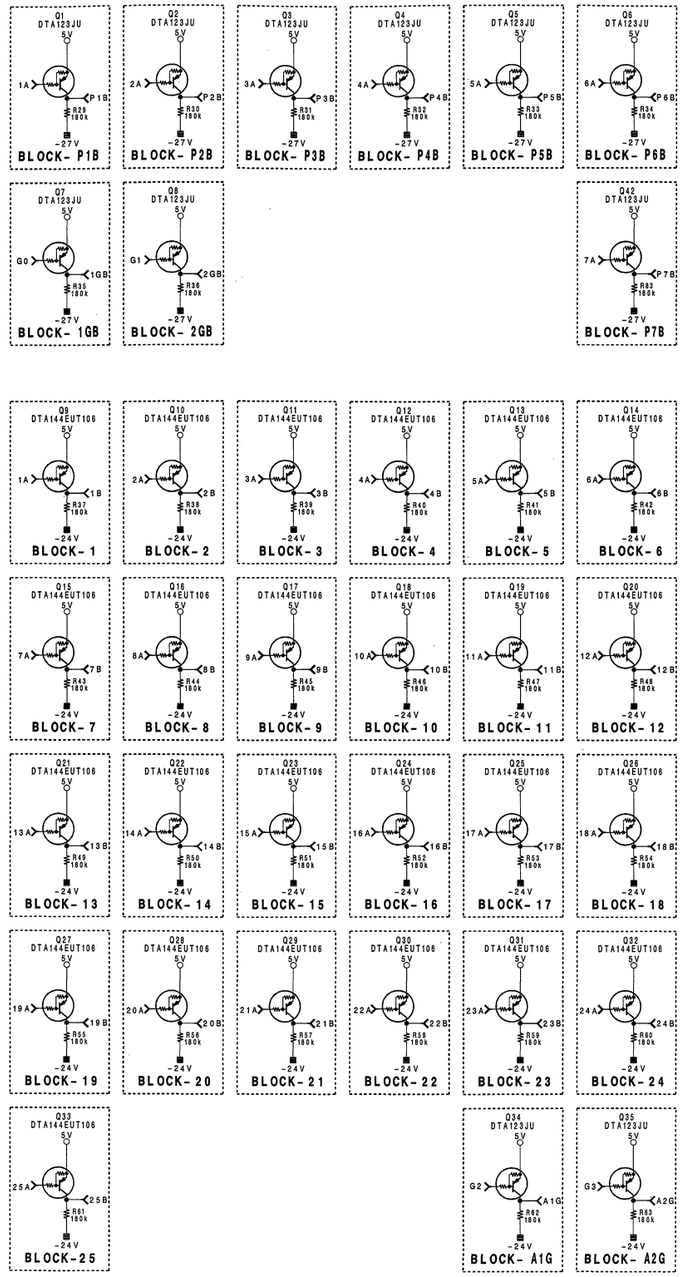
Q1 DTA123JU BLOCK- P1B
Q2 DTA123JU BLOCK- P2B
Q3 DTA123JU BLOCK- P3B
Q4 DTA123JU BLOCK- P4B
Q5 DTA123JU BLOCK- P5B
Q6 DTA123JU BLOCK- P6B
Q7 DTA123JU BLOCK- 1GB
Q8 DTA123JU BLOCK- 2GB
Q42 DTA123JU BLOCK- P7B
Q9 DTA144EUT106 BLOCK- 1
Q10 DTA144EUT106 BLOCK- 2
Q11 DTA144EUT106 BLOCK- 3
Q12 DTA144EUT106 BLOCK- 4
Q13 DTA144EUT106 BLOCK- 5
Q14 DTA144EUT106 BLOCK- 6
Q15 DTA144EUT106 BLOCK- 7
Q16 DTA144EUT106 BLOCK- 8
Q17 DTA144EUT106 BLOCK- 9
Q18 DTA144EUT106 BLOCK- 10
Q19 DTA144EUT106 BLOCK- 11
Q20 DTA144EUT106 BLOCK- 12
Q21 DTA144EUT106 BLOCK- 13
Q22 DTA144EUT106 BLOCK- 14
Q23 DTA144EUT106 BLOCK- 15
Q24 DTA144EUT106 BLOCK- 16
Q25 DTA144EUT106 BLOCK- 17
Q26 DTA144EUT106 BLOCK- 18
Q27 DTA144EUT106 BLOCK- 19
Q28 DTA144EUT106 BLOCK- 20
Q29 DTA144EUT106 BLOCK- 21
Q30 DTA144EUT106 BLOCK- 22
Q31 DTA144EUT106 BLOCK- 23
Q32 DTA144EUT106 BLOCK- 24
Q33 DTA144EUT106 BLOCK- 25
Q34 DTA123JU BLOCK- A1G
Q35 DTA123JU BLOCK- A2G
Q36 DTA144EUT106 BLOCK- L1
Q37 DTA144EUT106 BLOCK- L2
Q38 DTA144EUT106 BLOCK- L3
Q39 DTA144EUT106 BLOCK- L4
Q40 DTA144EUT106 BLOCK- L5
Q41 DTA144EUT106 BLOCK- L6

KY-290 BOARD

BOARD NO. 1-648-915-11
UVW-1400 (J) ;#10001-
UVW-1400 (UC) ;#10001-
UVW-1400P (EK) ;#10001-

KY-290A(1-648-915-21)

CN590	N-3
CN591	D-1
✱D1	N-2
✱D2	L-1
✱D3	K-1
✱D4	K-1
✱D5	J-2
✱D6	J-2
✱D7	J-2
✱D8	H-2
✱D9	H-3
✱D10	J-3
✱D11	J-3
✱D12	J-3
IC1	L-2
IC3	N-2
IC6	M-3
ND1	E-2
✱Q1	D-3
✱Q2	D-3
✱Q3	D-2
✱Q4	D-2
✱Q5	D-2
✱Q6	D-2
✱Q7	B-2
✱Q8	C-2
✱Q36	N-1
✱Q37	M-1
✱Q38	M-1
✱Q39	N-1
✱Q40	M-1
✱Q42	D-2
S1	K-1
S2	P-1
S3	N-1
S4	L-1
S5	M-1
S8	H-2
S9	H-3
S10	H-3
S11	G-3
S12	J-3
S13	G-3
S15	G-2
S16	E-2
S18	J-3
S20	E-3
S21	E-2
S23	F-3
X1	N-2

✱ : B SIDE

KY-290A;FUNCTION KEY,FL DISPLAY

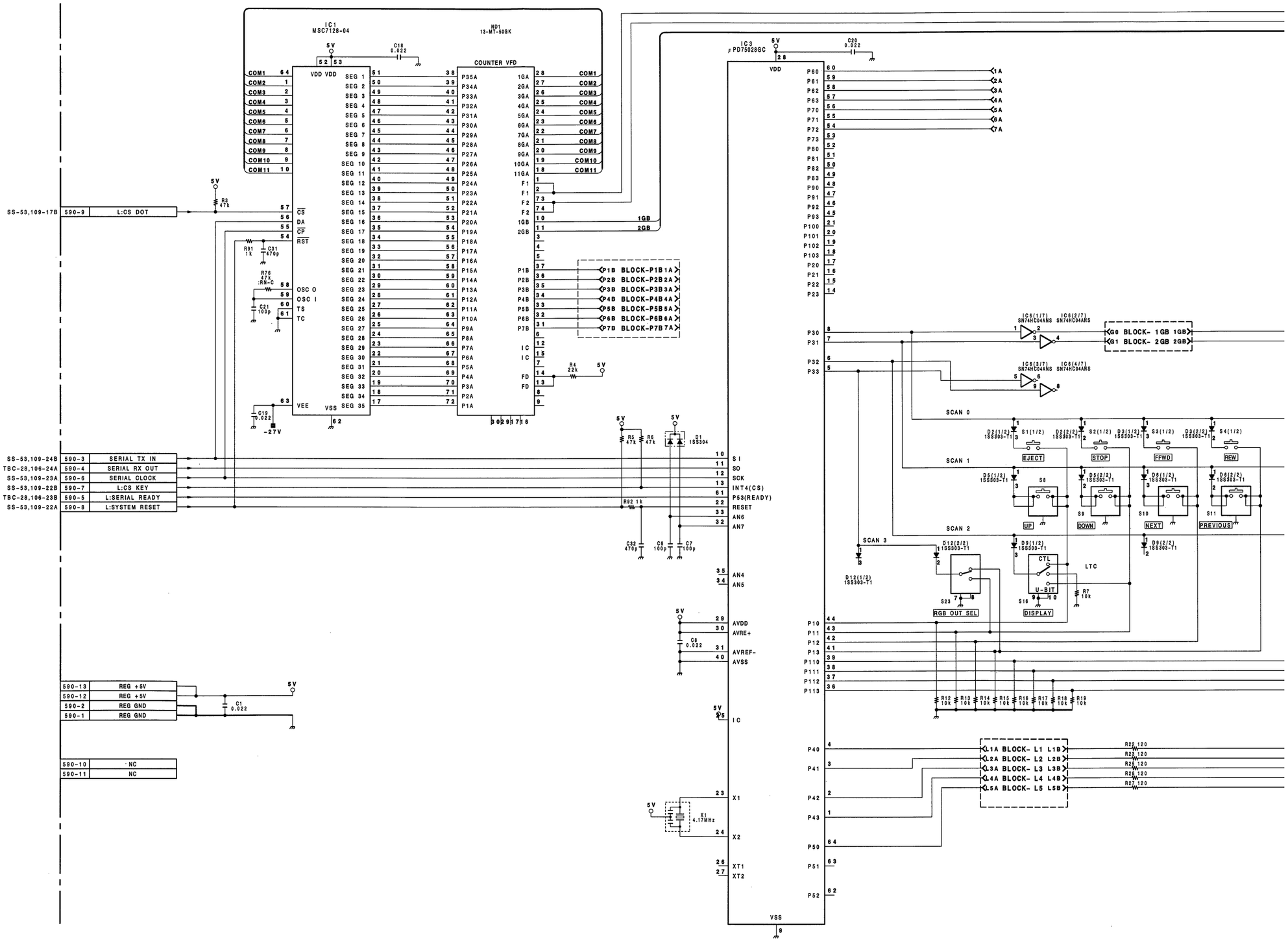

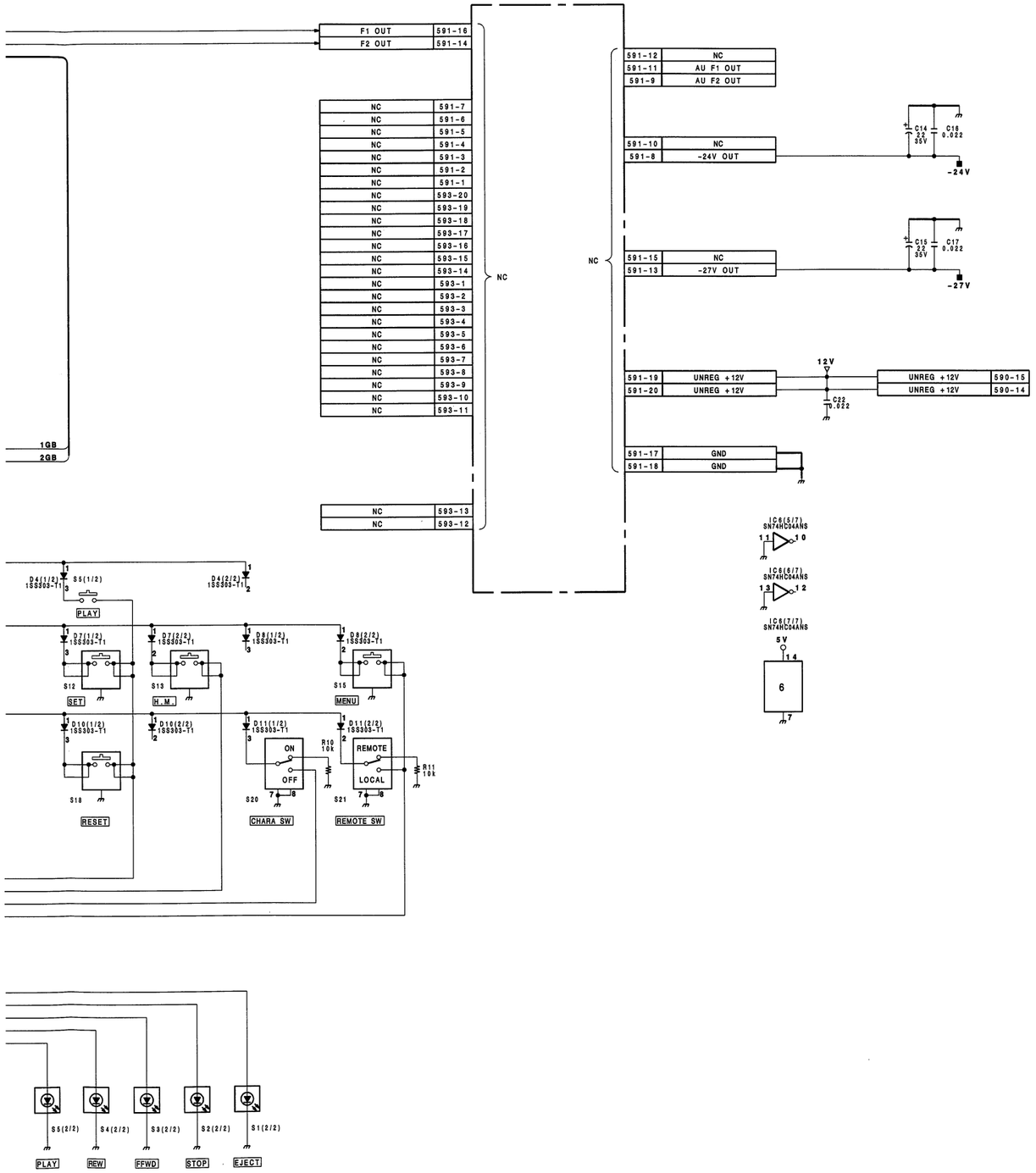

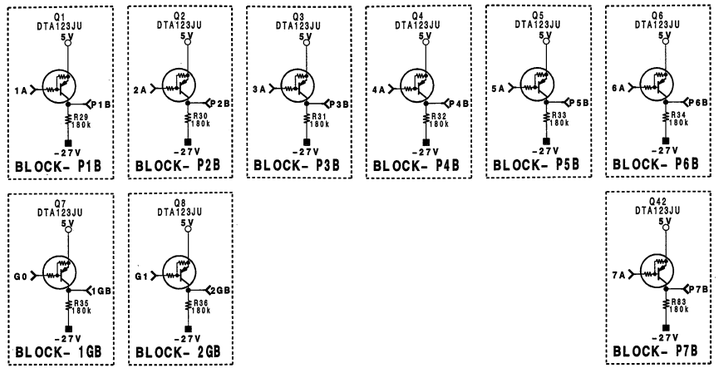

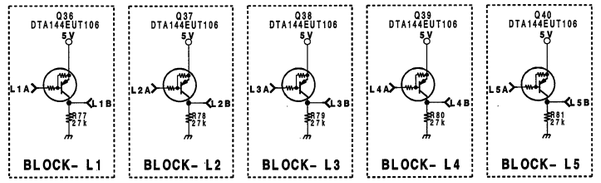

KY-290A BOARD

BOARD NO.1-648-915-21
UVW-1200 (J) ;#10001-
UVW-1200 (UC);#10001-
UVW-1200P(EK);#10001-

MS-39/39A (1-648-909-11,12)

CN350	L-5
CN351	F-1
CN352	F-1
CN353	J-5
CN354	B-3
CN355	D-3
CN356	B-1
CN357	J-1
CN358	C-3
CN359	K-5
CN360	F-5
CN361	G-5
CN362	B-2
CN363	G-4
CN364	K-2
D1	F-2
D2	F-2
D3	B-2
$\overline{D4}$	M-2
$\overline{D7}$	K-1
D8	K-1
D9	K-1
D10	L-1
IC1	H-4
IC2	E-3
IC3	D-3
IC7	G-4
IC8	G-3
Q1	F-1
Q2	F-1
Q3	B-1
$\overline{Q4}$	M-1
X1	J-4

*: B SIDE
_: UVW-1400/1400P ONLY

MS-39/39A;CASSETTE INFORMATION, SOLENOID DRIVER, MECHA.CONTROL MPU, DATA STRAGE

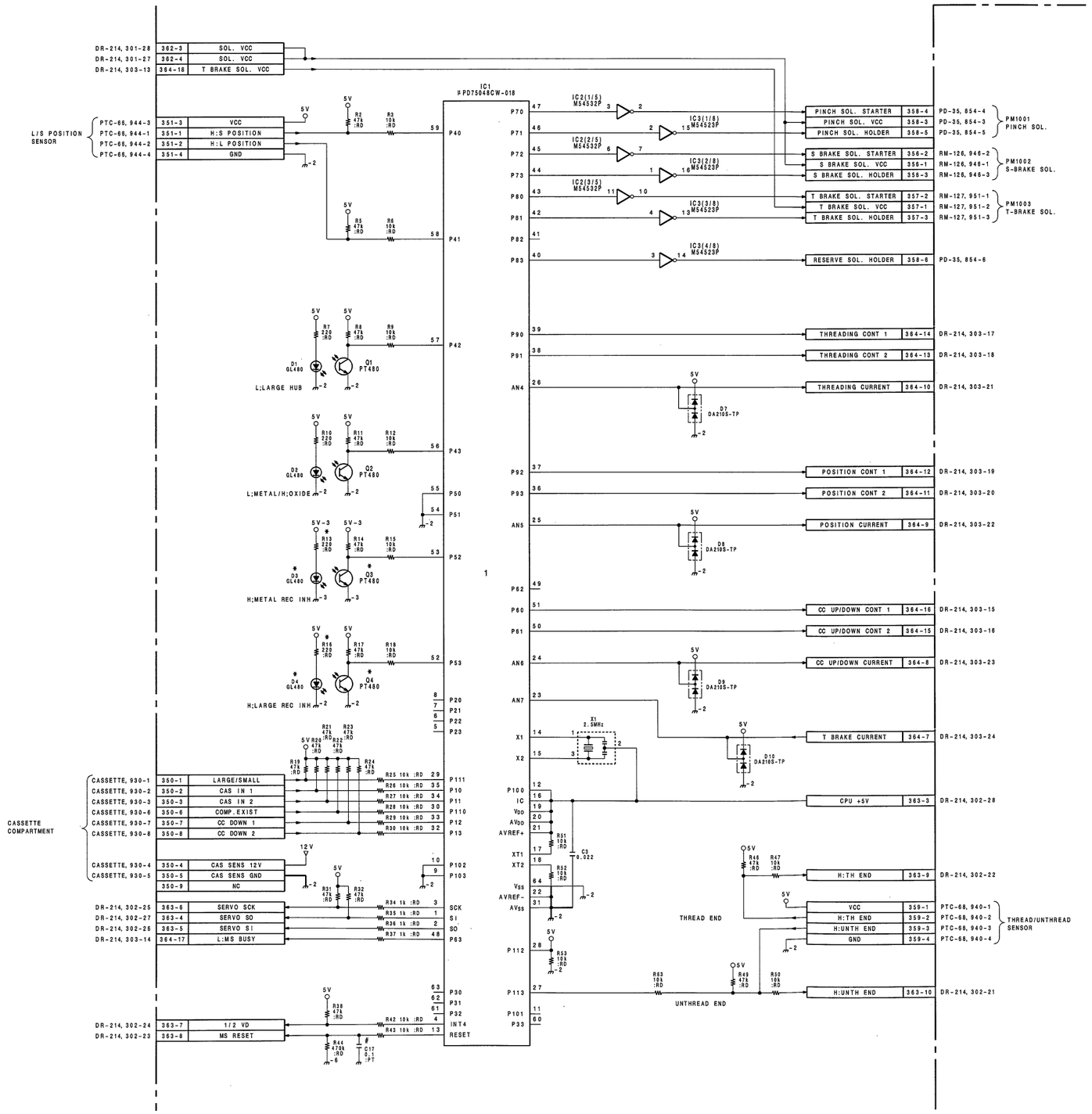
IC1 μPD75048CW-018
DR-214, 301-28 362-3 SOL. VCC
DR-214, 301-27 362-4 SOL. VCC
DR-214, 303-13 364-16 T BRAKE SOL. VCC
L/S POSITION SENSOR
PTC-66, 944-3 351-3 VCC
PTC-66, 944-1 351-1 H:S POSITION
PTC-66, 944-2 351-2 H:L POSITION
PTC-66, 944-4 351-4 GND
L:LARGE HUB
H:METAL REC INH
L:METAL/H:OXIDE
H:LARGE REC INH
CASSETTE COMPARTMENT
CASSETTE, 930-1 350-1 LARGE/SMALL
CASSETTE, 930-2 350-2 CAS IN 1
CASSETTE, 930-3 350-3 CAS IN 2
CASSETTE, 930-6 350-6 COMP.EXIST
CASSETTE, 930-7 350-7 CC DOWN 1
CASSETTE, 930-8 350-8 CC DOWN 2
CASSETTE, 930-4 350-4 CAS SENS 12V
CASSETTE, 930-5 350-5 CAS SENS GND
350-9 NC
DR-214, 302-25 363-6 SERVO SCK
DR-214, 302-27 363-4 SERVO SO
DR-214, 302-26 363-5 SERVO SI
DR-214, 303-14 364-17 L:MS BUSY
DR-214, 302-24 363-7 1/2 VD
DR-214, 302-23 363-8 MS RESET
PINCH SOL. STARTER 358-4 PD-35, 854-4
PINCH SOL. VCC 358-3 PD-35, 854-3
PINCH SOL. HOLDER 358-5 PD-35, 854-5
PM1001 PINCH SOL.
S BRAKE SOL. STARTER 356-2 RM-126, 946-2
S BRAKE SOL. VCC 356-1 RM-126, 946-1
S BRAKE SOL. HOLDER 356-3 RM-126, 946-3
PM1002 S-BRAKE SOL.
T BRAKE SOL. STARTER 357-2 RM-127, 951-1
T BRAKE SOL. VCC 357-1 RM-127, 951-2
T BRAKE SOL. HOLDER 357-3 RM-127, 951-3
PM1003 T-BRAKE SOL.
RESERVE SOL. HOLDER 358-6 PD-35, 854-6
THREADING CONT 1 364-14 DR-214, 303-17
THREADING CONT 2 364-13 DR-214, 303-18
THREADING CURRENT 364-10 DR-214, 303-21
POSITION CONT 1 364-12 DR-214, 303-19
POSITION CONT 2 364-11 DR-214, 303-20
POSITION CURRENT 364-9 DR-214, 303-22
CC UP/DOWN CONT 1 364-16 DR-214, 303-15
CC UP/DOWN CONT 2 364-15 DR-214, 303-16
CC UP/DOWN CURRENT 364-8 DR-214, 303-23
T BRAKE CURRENT 364-7 DR-214, 303-24
CPU +5V 363-3 DR-214, 302-28
H:TH END 363-9 DR-214, 302-22
VCC 359-1 PTC-68, 940-1
H:TH END 359-2 PTC-68, 940-2
H:UNTH END 359-3 PTC-68, 940-3
GND 359-4 PTC-68, 940-4
THREAD/UNTHREAD SENSOR
THREAD END
UNTHREAD END
H:UNTH END 363-10 DR-214, 302-21

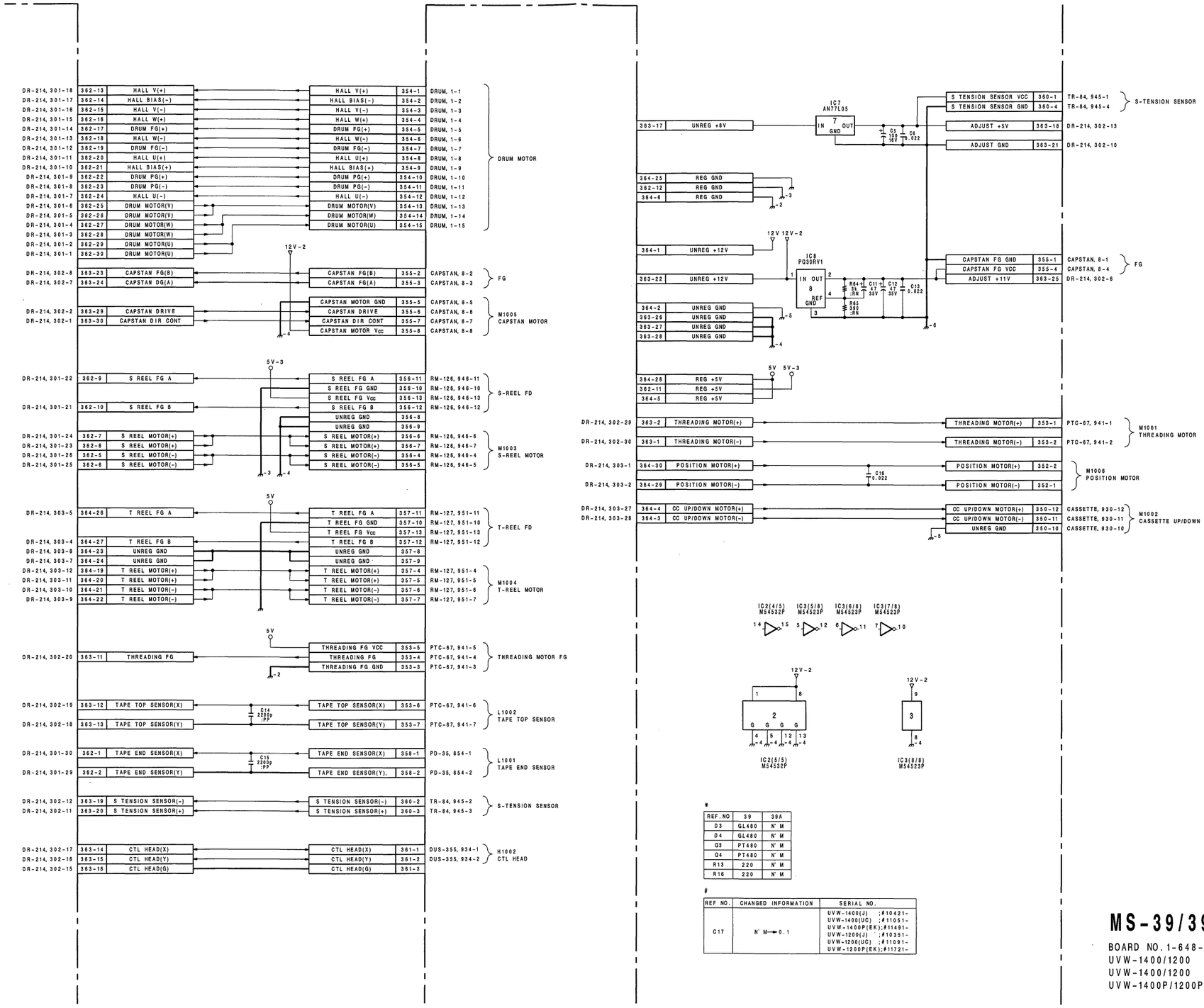
DR-214, 301-18 362-13 HALL V(+) — HALL V(+) 354-1 DRUM, 1-1
DR-214, 301-17 362-14 HALL BIAS(-) — HALL BIAS(-) 354-2 DRUM, 1-2
DR-214, 301-16 362-15 HALL V(-) — HALL V(-) 354-3 DRUM, 1-3
DR-214, 301-15 362-16 HALL W(+) — HALL W(+) 354-4 DRUM, 1-4
DR-214, 301-14 362-17 DRUM FG(+) — DRUM FG(+) 354-5 DRUM, 1-5
DR-214, 301-13 362-18 HALL W(-) — HALL W(-) 354-6 DRUM, 1-6
DR-214, 301-12 362-19 DRUM FG(-) — DRUM FG(-) 354-7 DRUM, 1-7
DR-214, 301-11 362-20 HALL U(+) — HALL U(+) 354-8 DRUM, 1-8
DR-214, 301-10 362-21 HALL BIAS(+) — HALL BIAS(+) 354-9 DRUM, 1-9
DR-214, 301-9 362-22 DRUM PG(+) — DRUM PG(+) 354-10 DRUM, 1-10
DR-214, 301-8 362-23 DRUM PG(-) — DRUM PG(-) 354-11 DRUM, 1-11
DR-214, 301-7 362-24 HALL U(-) — HALL U(-) 354-12 DRUM, 1-12
DR-214, 301-6 362-25 DRUM MOTOR(V) — DRUM MOTOR(V) 354-13 DRUM, 1-13
DR-214, 301-5 362-26 DRUM MOTOR(V) — DRUM MOTOR(W) 354-14 DRUM, 1-14
DR-214, 301-4 362-27 DRUM MOTOR(W) — DRUM MOTOR(U) 354-15 DRUM, 1-15
} DRUM MOTOR
DR-214, 301-3 362-28 DRUM MOTOR(W)
DR-214, 301-2 362-29 DRUM MOTOR(U)
DR-214, 301-1 362-30 DRUM MOTOR(U)
12V-2
DR-214, 302-8 363-23 CAPSTAN FG(B) — CAPSTAN FG(B) 355-2 CAPSTAN, 8-2
DR-214, 302-7 363-24 CAPSTAN DG(A) — CAPSTAN FG(A) 355-3 CAPSTAN, 8-3
} FG
CAPSTAN MOTOR GND 355-5 CAPSTAN, 8-5
DR-214, 302-2 363-29 CAPSTAN DRIVE — CAPSTAN DRIVE 355-6 CAPSTAN, 8-6
DR-214, 302-1 363-30 CAPSTAN DIR CONT — CAPSTAN DIR CONT 355-7 CAPSTAN, 8-7
CAPSTAN MOTOR Vcc 355-8 CAPSTAN, 8-8
} M1005 CAPSTAN MOTOR
5V-3
DR-214, 301-22 362-9 S REEL FG A — S REEL FG A 356-11 RM-126, 946-11
S REEL FG GND 356-10 RM-126, 946-10
S REEL FG Vcc 356-13 RM-126, 946-13
DR-214, 301-21 362-10 S REEL FG B — S REEL FG B 356-12 RM-126, 946-12
} S-REEL FD
UNREG GND 356-8
UNREG GND 356-9
DR-214, 301-24 362-7 S REEL MOTOR(+) — S REEL MOTOR(+) 356-6 RM-126, 946-6
DR-214, 301-23 362-8 S REEL MOTOR(+) — S REEL MOTOR(+) 356-7 RM-126, 946-7
DR-214, 301-26 362-5 S REEL MOTOR(-) — S REEL MOTOR(-) 356-4 RM-126, 946-4
DR-214, 301-25 362-6 S REEL MOTOR(-) — S REEL MOTOR(-) 356-5 RM-126, 946-5
} M1003 S-REEL MOTOR
5V
DR-214, 303-5 364-26 T REEL FG A — T REEL FG A 357-11 RM-127, 951-11
T REEL FG GND 357-10 RM-127, 951-10
T REEL FG Vcc 357-13 RM-127, 951-13
DR-214, 303-4 364-27 T REEL FG B — T REEL FG B 357-12 RM-127, 951-12
} T-REEL FD
DR-214, 303-8 364-23 UNREG GND — UNREG GND 357-8
DR-214, 303-7 364-24 UNREG GND — UNREG GND 357-9
DR-214, 303-12 364-19 T REEL MOTOR(+) — T REEL MOTOR(+) 357-4 RM-127, 951-4
DR-214, 303-11 364-20 T REEL MOTOR(+) — T REEL MOTOR(+) 357-5 RM-127, 951-5
DR-214, 303-10 364-21 T REEL MOTOR(-) — T REEL MOTOR(-) 357-6 RM-127, 951-6
DR-214, 303-9 364-22 T REEL MOTOR(-) — T REEL MOTOR(-) 357-7 RM-127, 951-7
} M1004 T-REEL MOTOR
5V
THREADING FG VCC 353-5 PTC-67, 941-5
DR-214, 302-20 363-11 THREADING FG — THREADING FG 353-4 PTC-67, 941-4
THREADING FG GND 353-3 PTC-67, 941-3
} THREADING MOTOR FG
DR-214, 302-19 363-12 TAPE TOP SENSOR(X) — TAPE TOP SENSOR(X) 353-6 PTC-67, 941-6
C14 2200p PP
DR-214, 302-18 363-13 TAPE TOP SENSOR(Y) — TAPE TOP SENSOR(Y) 353-7 PTC-67, 941-7
} L1002 TAPE TOP SENSOR
DR-214, 301-30 362-1 TAPE END SENSOR(X) — TAPE END SENSOR(X) 358-1 PD-55, 854-1
C15 2200p PP
DR-214, 301-29 362-2 TAPE END SENSOR(Y) — TAPE END SENSOR(Y) 358-2 PD-55, 854-2
} L1001 TAPE END SENSOR
DR-214, 302-12 363-19 S TENSION SENSOR(-) — S TENSION SENSOR(-) 360-2 TR-84, 945-2
DR-214, 302-11 363-20 S TENSION SENSOR(+) — S TENSION SENSOR(+) 360-3 TR-84, 945-3
} S-TENSION SENSOR
DR-214, 302-17 363-14 CTL HEAD(X) — CTL HEAD(X) 361-1 DUS-355, 934-1
DR-214, 302-16 363-15 CTL HEAD(Y) — CTL HEAD(Y) 361-2 DUS-355, 934-2
DR-214, 302-15 363-16 CTL HEAD(G) — CTL HEAD(G) 361-3
} H1002 CTL HEAD
IC7 AN7L05
363-17 UNREG +8V — IN 7 OUT — GND
C5 100 16V
C6 0.022
S TENSION SENSOR VCC 360-1 TR-84, 945-1
S TENSION SENSOR GND 360-4 TR-84, 945-4
} S-TENSION SENSOR
ADJUST +5V 363-18 DR-214, 302-13
ADJUST GND 363-21 DR-214, 302-10
364-25 REG GND
362-12 REG GND
364-6 REG GND
12V 12V-2
364-1 UNREG +12V
IC8 PQ30RV1 — IN OUT REF GND
363-22 UNREG +12V
R64 5k
R65 390
C11 4.7 35V
C12 4.7 35V
C13 0.022
CAPSTAN FG GND 355-1 CAPSTAN, 8-1
CAPSTAN FG VCC 355-4 CAPSTAN, 8-4
} FG
ADJUST +11V 363-25 DR-214, 302-6
364-2 UNREG GND
363-26 UNREG GND
363-27 UNREG GND
363-28 UNREG GND
5V 5V-3
364-28 REG +5V
362-11 REG +5V
364-5 REG +5V
DR-214, 302-29 363-2 THREADING MOTOR(+) — THREADING MOTOR(+) 353-1 PTC-67, 941-1
DR-214, 302-30 363-1 THREADING MOTOR(-) — THREADING MOTOR(-) 353-2 PTC-67, 941-2
} M1001 THREADING MOTOR
DR-214, 303-1 364-30 POSITION MOTOR(+) — POSITION MOTOR(+) 352-2
C16 0.022
DR-214, 303-2 364-29 POSITION MOTOR(-) — POSITION MOTOR(-) 352-1
} M1006 POSITION MOTOR
DR-214, 303-27 364-4 CC UP/DOWN MOTOR(+) — CC UP/DOWN MOTOR(+) 350-12 CASSETTE, 930-12
DR-214, 303-28 364-3 CC UP/DOWN MOTOR(-) — CC UP/DOWN MOTOR(-) 350-11 CASSETTE, 930-11
UNREG GND 350-10 CASSETTE, 930-10
} M1002 CASSETTE UP/DOWN MOTOR
IC2(4/5) M54532P
IC3(5/8) M54523P
IC3(6/8) M54523P
IC3(7/8) M54523P
14 15 5 12 6 11 7 10
12V-2
1 8
2
G G G G
4 5 12 13
IC2(5/5) M54532P
12V-2
9
3
8
IC3(8/8) M54523P

*

REF.NO	39	39A
D3	GL480	N' M
D4	GL480	N' M
Q3	PT480	N' M
Q4	PT480	N' M
R13	220	N' M
R16	220	N' M

#

REF NO.	CHANGED INFORMATION	SERIAL NO.
C17	N' M→0.1	UVW-1400(J) ;#10421- UVW-1400(UC) ;#11051- UVW-1400P(EK);#11491- UVW-1200(J) ;#10351- UVW-1200(UC) ;#11091- UVW-1200P(EK);#11721-

MS-39/39A BOARD

BOARD NO.1-648-909-11, 12
UVW-1400/1200 (J) ;#10001-
UVW-1400/1200 (UC) ;#10001-
UVW-1400P/1200P (EK) ;#10001-

RP-70B/70BP (1/2)

RP-70B/70BP(1-648-904-31)

CN1	J-4	FS716	J-5	TP202	F-1
CN101	H-4	FS717	D-1	TP203	F-3
CN110	E-5	FS718	D-1	TP204	F-4
CN201	F-4	FS719	D-1	TP303	E-3
CN301	E-4	FS720	H-5	TP304	E-4
		FS721	G-5		
✱D701	D-2	FS722	G-5		
✱D702	D-5	FS723	D-1		
✱D703	D-3	FS724	E-1		
✱D704	D-4	FS725	H-5		
		FS726	H-5		
E1	J-1				
E2	J-4	IC1	J-2		
E201	F-1	IC2	J-4		
E202	F-4	IC101	H-2		
		IC102	H-4		
FS2	J-1	IC201	F-2		
FS3	J-2	IC202	G-4		
FS4	J-2	IC301	E-2		
FS5	J-3	IC302	E-4		
FS6	J-4	✱IC501	H-1		
FS7	J-4	✱IC502	G-1		
FS101	H-2	✱IC503	F-1		
FS102	H-2	✱IC701	D-2		
FS103	H-3	IC702	D-1		
FS104	H-4	IC703	D-5		
FS105	H-4	IC704	D-4		
FS106	H-1	✱IC705	D-3		
FS201	F-1	IC706	D-3		
FS202	G-2	IC707	D-4		
FS203	F-2	IC708	D-3		
FS204	F-3				
FS205	G-4	✱Q1	J-1		
FS206	F-4	✱Q2	J-2		
FS301	E-2	✱Q3	J-2		
FS302	E-2	✱Q102	H-2		
FS303	E-3	✱Q103	H-2		
FS304	F-5	✱Q201	F-1		
FS305	E-4	✱Q202	F-2		
FS501	E-1	✱Q203	F-2		
FS503	F-1	✱Q302	E-2		
FS504	F-1	✱Q303	E-2		
FS505	G-1	✱Q501	H-1		
FS506	H-1	✱Q609	B-2		
FS507	H-1	✱Q610	B-2		
FS508	H-1	Q611	B-2		
FS509	H-1	✱Q612	B-2		
FS510	J-1	✱Q613	B-1		
FS511	J-1	✱Q614	B-1		
FS601	B-2	✱Q615	B-2		
FS602	B-2	✱Q616	B-2		
FS610 P	A-3	✱Q617	B-2		
FS614	B-1				
FS615	A-5	RV1	J-2		
FS616	B-5	RV2	J-3		
FS617	C-5	RV101	H-2		
FS618	C-5	RV102	H-3		
FS619	B-5	RV201	F-2		
FS620	B-5	RV202	G-3		
FS701	D-2	RV301	E-2		
FS702	D-3	RV302	F-3		
FS703	D-4				
FS704	D-4	S1	J-3		
FS705	C-4	S101	H-3		
FS706	D-4	S201	F-3		
FS707	D-5	S301	E-3		
FS708	C-5				
FS709	C-5	TP1	J-1		
FS710	C-5	TP2	J-1		
FS711	C-5	TP3	J-3		
FS712	D-5	TP4	J-4		
FS713	E-5	TP103	H-3		
FS714	F-5	TP104	H-4		
FS715	G-5	TP201	G-1		

✱ : B SIDE
P : UVW-1400P ONLY

RP-70B/70BP(1/2);Y RF REC/PB

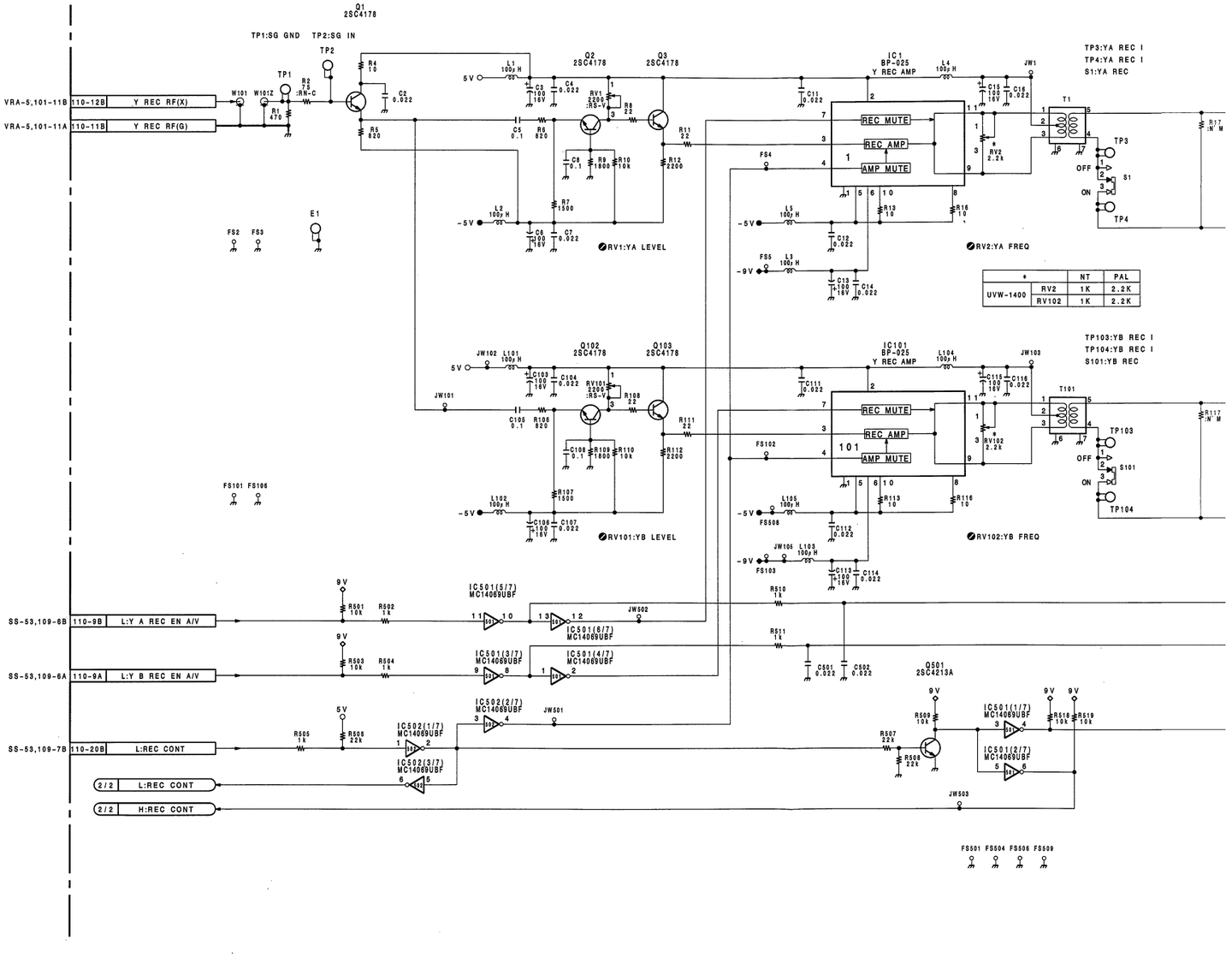

16-42

RP-70B/70BP (1/2)

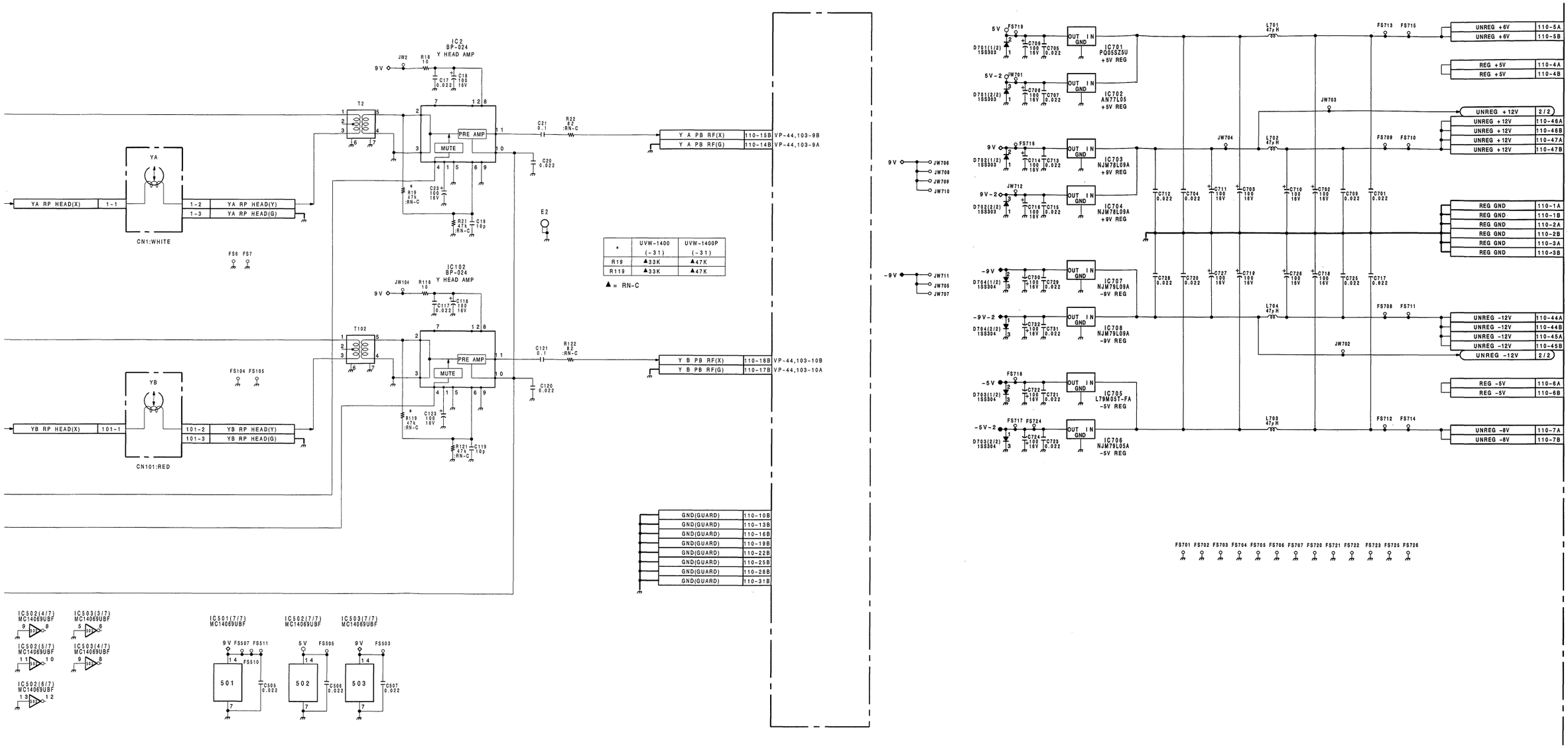

*	UVW-1400 (-31)	UVW-1400P (-31)
R19	▲33K	▲47K
R119	▲33K	▲47K

▲ = RN-C

RP-70B/70BP BOARD (1/2)

BOARD NO.1-648-904-31
UVW-1400 (J) ;#10001-
UVW-1400 (UC);#10001-
UVW-1400P(EK);#10001-

RP-70B/70BP (2/2)

RP-70B/70BP(1-648-904-31)

RP-70B/70BP(2/2);C RF REC/PB, FULL ERASE OSC

CN1	J-4	FS716	J-5	TP202	F-1
CN101	H-4	FS717	D-1	TP203	F-3
CN110	E-5	FS718	D-1	TP204	F-4
CN201	F-4	FS719	D-1	TP303	E-3
CN301	E-4	FS720	H-5	TP304	E-4
		FS721	G-5		
✱D701	D-2	FS722	G-5		
✱D702	D-5	FS723	D-1		
✱D703	D-3	FS724	E-1		
✱D704	D-4	FS725	H-5		
		FS726	H-5		
E1	J-1				
E2	J-4	IC1	J-2		
E201	F-1	IC2	J-4		
E202	F-4	IC101	H-2		
		IC102	H-4		
FS2	J-1	IC201	F-2		
FS3	J-2	IC202	G-4		
FS4	J-2	IC301	E-2		
FS5	J-3	IC302	E-4		
FS6	J-4	✱IC501	H-1		
FS7	J-4	✱IC502	G-1		
FS101	H-2	✱IC503	F-1		
FS102	H-2	✱IC701	D-2		
FS103	H-3	IC702	D-1		
FS104	H-4	IC703	D-5		
FS105	H-4	IC704	D-4		
FS106	H-1	✱IC705	D-3		
FS201	F-1	IC706	D-3		
FS202	G-2	IC707	D-4		
FS203	F-2	IC708	D-3		
FS204	F-3				
FS205	G-4	✱Q1	J-1		
FS206	F-4	✱Q2	J-2		
FS301	E-2	✱Q3	J-2		
FS302	E-2	✱Q102	H-2		
FS303	E-3	✱Q103	H-2		
FS304	F-5	✱Q201	F-1		
FS305	E-4	✱Q202	F-2		
FS501	E-1	✱Q203	F-2		
FS503	F-1	✱Q302	E-2		
FS504	F-1	✱Q303	E-2		
FS505	G-1	✱Q501	H-1		
FS506	H-1	✱Q609	B-2		
FS507	H-1	✱Q610	B-2		
FS508	H-1	Q611	B-2		
FS509	H-1	✱Q612	B-2		
FS510	J-1	✱Q613	B-1		
FS511	J-1	✱Q614	B-1		
FS601	B-2	✱Q615	B-2		
FS602	B-2	✱Q616	B-2		
FS610 P	A-3	✱Q617	B-2		
FS614	B-1				
FS615	A-5	RV1	J-2		
FS616	B-5	RV2	J-3		
FS617	C-5	RV101	H-2		
FS618	C-5	RV102	H-3		
FS619	B-5	RV201	F-2		
FS620	B-5	RV202	G-3		
FS701	D-2	RV301	E-2		
FS702	D-3	RV302	F-3		
FS703	D-4				
FS704	D-4	S1	J-3		
FS705	C-4	S101	H-3		
FS706	D-4	S201	F-3		
FS707	D-5	S301	E-3		
FS708	C-5				
FS709	C-5	TP1	J-1		
FS710	C-5	TP2	J-1		
FS711	C-5	TP3	J-3		
FS712	D-5	TP4	J-4		
FS713	E-5	TP103	H-3		
FS714	F-5	TP104	H-4		
FS715	G-5	TP201	G-1		

✱ : B SIDE
P : UVW-1400P ONLY

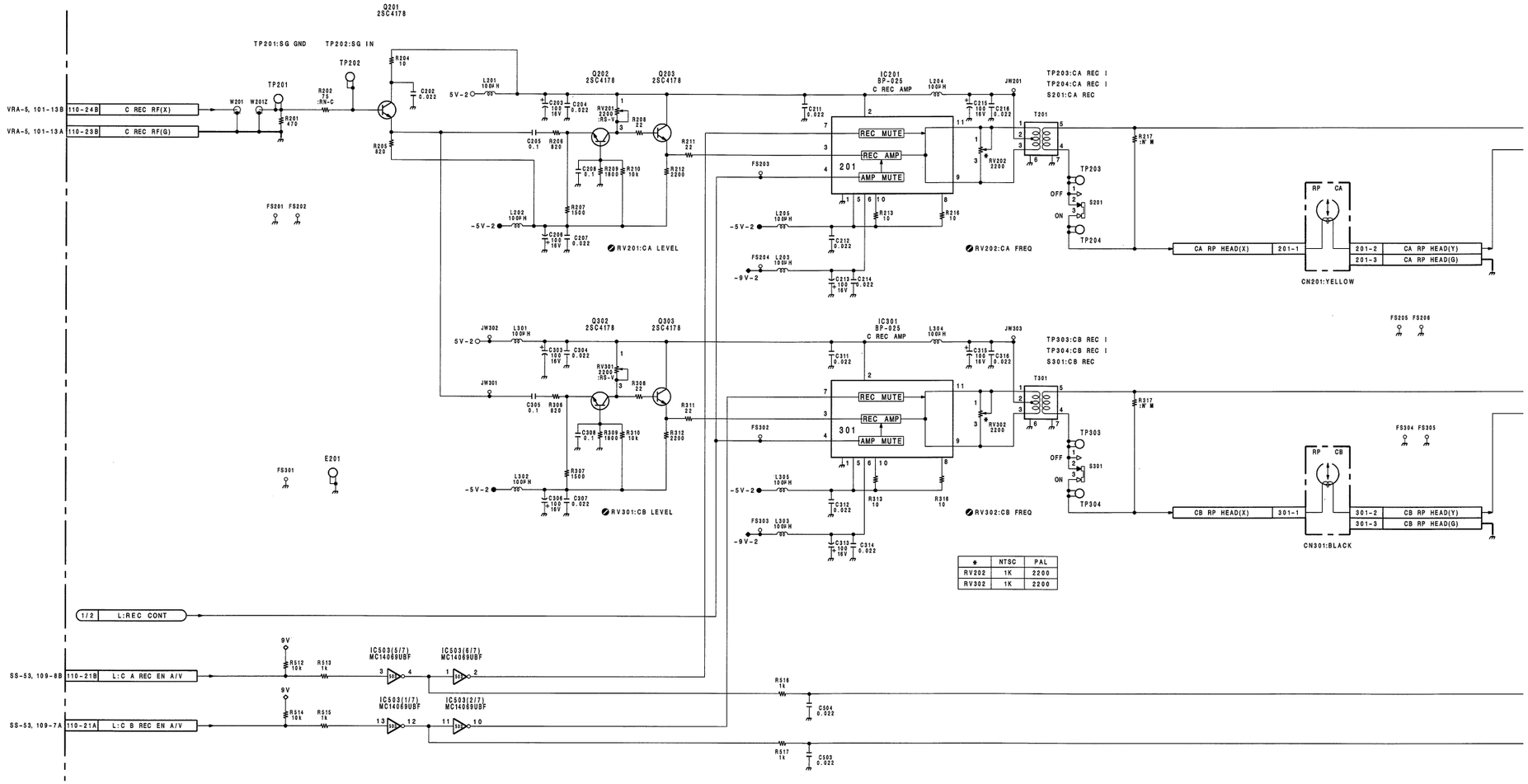

16-44

A B C D E F G H

RP-70B/70BP (2/2)

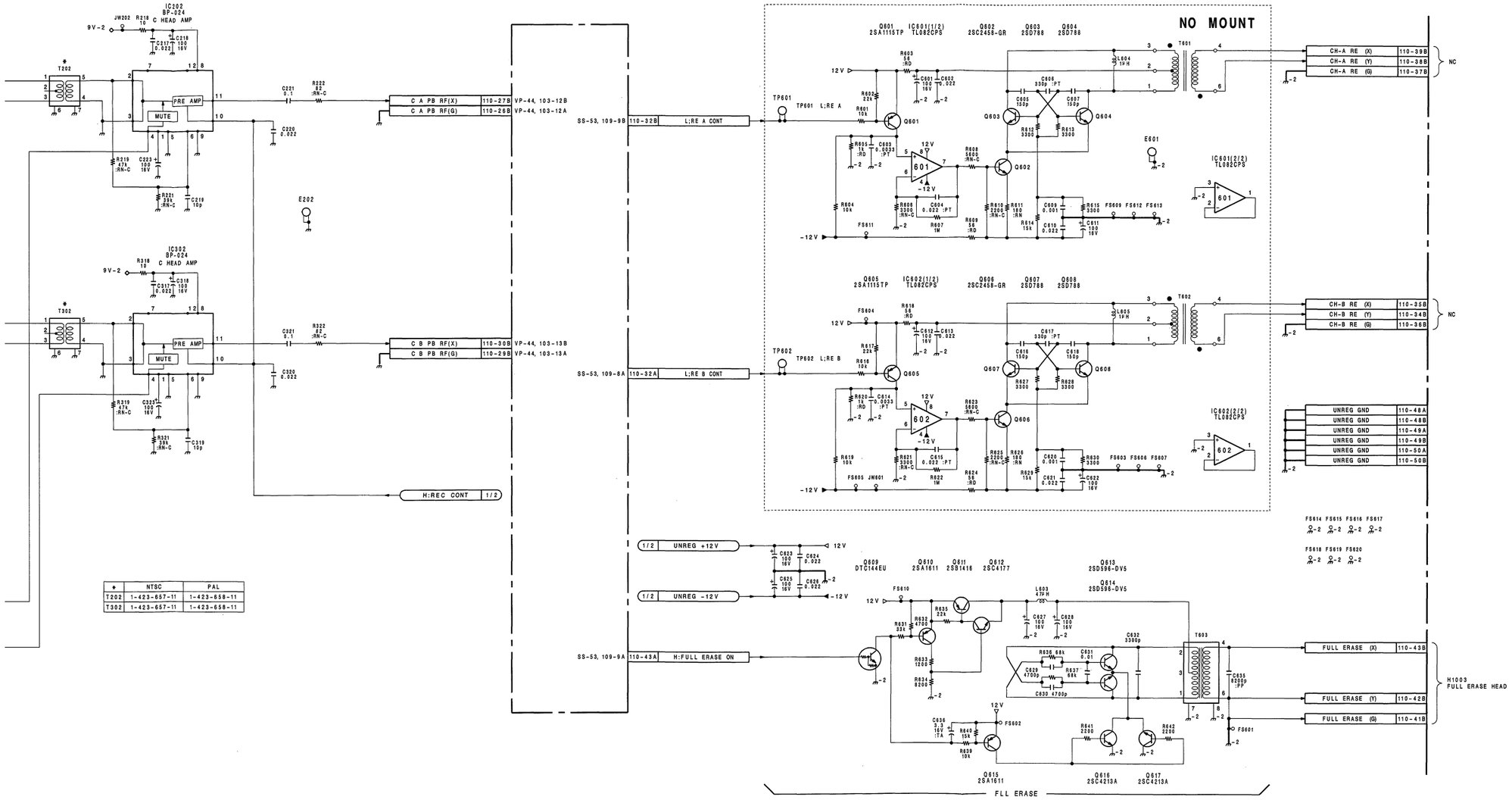

*	NTSC	PAL
T202	1-423-657-11	1-423-658-11
T302	1-423-657-11	1-423-658-11

RP-70B/70BP BOARD (2/2)

BOARD NO. 1-648-904-31
UVW-1400 (J) ;#10001-
UVW-1400 (UC) ;#10001-
UVW-1400P (EK) ;#10001-

SS-53A(1-648-903-11)

CNI4	K-3	IC222	J-3
CNI212	C-2	IC223	J-4
		IC224	J-3
CN1	E-1	IC225	J-3
CN2	F-1	IC226	C-4
CN3	P-1	IC227	A-2
CN107	N-6	IC228	F-2
CN108	K-6	IC229	L-3
CN109	C-6	IC230	H-3
		IC231	L-3
CV1	N-1	IC232	L-4
		IC233	M-3
✱D100	A-5		
✱D101	A-5	PS1	L-5
✱D102	A-5	PS2	M-5
✱D103	A-5		
✱D104	A-5	✱Q105	B-5
✱D105	B-4	✱Q106	B-5
✱D200	E-3	✱Q107	B-4
✱D201	E-3	✱Q108	B-5
✱D202	E-3	✱Q204	D-5
✱D203	E-3	✱Q205	D-5
✱D204	E-3	✱Q206	D-5
✱D205	E-2	✱Q207	D-5
✱D206	F-3	✱Q208	D-5
✱D207	F-3	✱Q209	D-5
✱D208	E-3	✱Q210	J-3
✱D210	G-4	✱Q211	J-3
✱D211	E-2		
✱D213	E-3	✱RB1	P-3
✱D214	J-6	✱RB2	R-2
✱D215	J-5	✱RB201	E-1
		✱RB202	B-1
E1	N-1	✱RB203	K-4
E200	E-4		
E201	D-1	S1	R-4
E202	J-1	S201	B-1
IC1	P-3	TP1	R-2
IC2	N-3	TP100	A-4
IC3	N-3	TP103	B-4
IC4	K-3	TP201	A-2
IC5	L-1	TP202	A-2
IC6	M-2	TP203	D-1
IC7	R-1	TP205	H-3
IC9	P-5	TP206	G-3
IC10	R-2	TP207	F-4
IC11	P-2	TP211	G-2
IC12	N-2	TP216	H-2
IC13	R-4	TP217	G-3
IC14	R-4	TP219	D-1
IC15	N-2	TP223	H-2
IC100	A-3	TP224	J-2
IC101	A-5	TP225	C-1
IC102	A-5		
IC103	B-5	X1	R-2
IC200	E-3	X101	A-3
IC201	F-4	X200	G-1
IC202	E-2		
IC203	E-3		
IC204	D-4		
IC206	E-3		
IC207	D-3		
IC208	D-3		
IC209	D-3		
IC210	D-3		
IC211	B-2		
IC212	C-2		
IC213	C-3		
IC214	E-3		
IC215	G-3		
IC216	G-3		
IC217	G-3		
IC219	H-1		
IC220	J-3		
IC221	J-4		

✱ : B SIDE

SS-53A(1/4);SYSCON MAIN

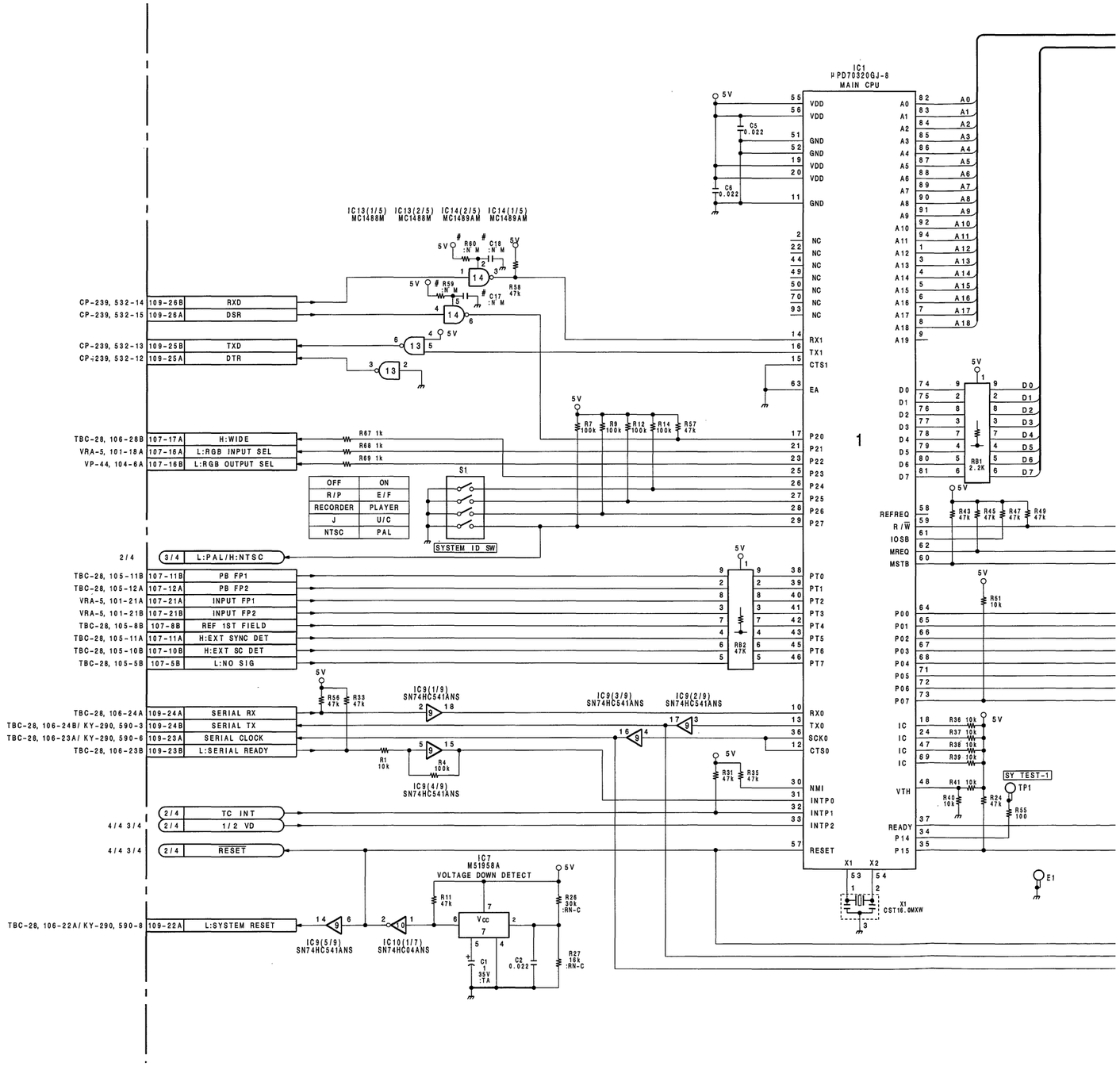

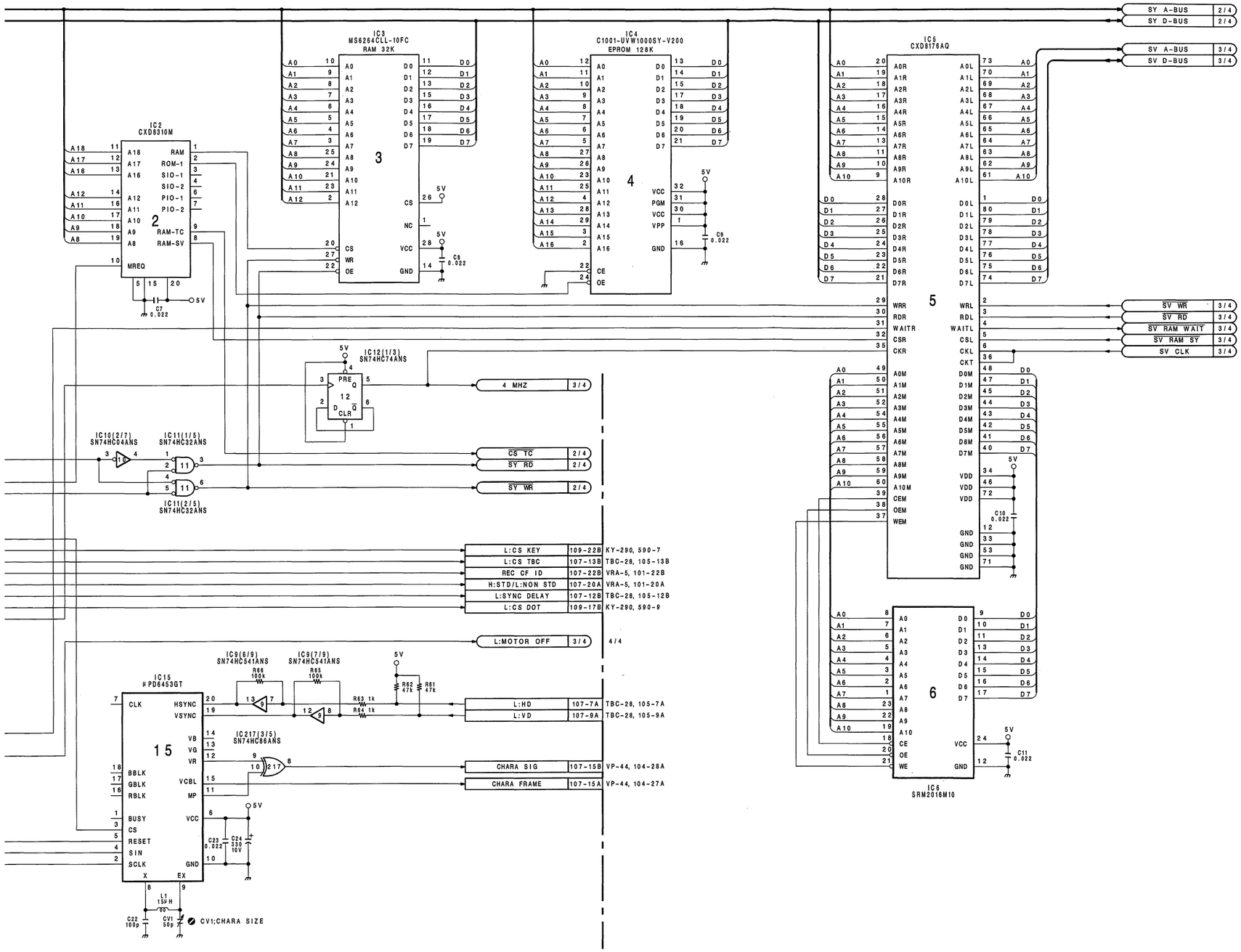

REF NO.	CHANGED INFORMATION	SERIAL NO.
C17, 18	0.022→N M	UVW-1400(J) ;#10421- UVW-1400(UC) ;#11141- UVW-1400P(EK);#12451- UVW-1200(J) ;#10621- UVW-1200(UC) ;#11911- UVW-1200P(EK);#13651-
R59, 60	15K→N M	UVW-1400(J) ;#10421- UVW-1400(UC) ;#11141- UVW-1400P(EK);#12451- UVW-1200(J) ;#11611- UVW-1200(UC) ;#10571- UVW-1200P(EK);#13401-

SS-53A BOARD (1/4)

BOARD NO. 1-648-903-11
UVW-1400/1200 (J) ;#10001-
UVW-1400/1200 (UC) ;#10001-
UVW-1400P/1200P (EK) ;#10001-

SS-53A(1-648-903-11)

CNI4	K-3	IC222	J-3
CNI212	C-2	IC223	J-4
		IC224	J-3
CN1	E-1	IC225	J-3
CN2	F-1	IC226	C-4
CN3	P-1	IC227	A-2
CN107	N-6	IC228	F-2
CN108	K-6	IC229	L-3
CN109	C-6	IC230	H-3
		IC231	L-3
CV1	N-1	IC232	L-4
		IC233	M-3
✱D100	A-5		
✱D101	A-5	PS1	L-5
✱D102	A-5	PS2	M-5
✱D103	A-5		
✱D104	A-5	✱Q105	B-5
✱D105	B-4	✱Q106	B-5
✱D200	E-3	✱Q107	B-4
✱D201	E-3	✱Q108	B-5
✱D202	E-3	✱Q204	D-5
✱D203	E-3	✱Q205	D-5
✱D204	E-3	✱Q206	D-5
✱D205	E-2	✱Q207	D-5
✱D206	F-3	✱Q208	D-5
✱D207	F-3	✱Q209	D-5
✱D208	E-3	✱Q210	J-3
✱D210	G-4	✱Q211	J-3
✱D211	E-2		
✱D213	E-3	✱RB1	P-3
✱D214	J-6	✱RB2	R-2
✱D215	J-5	✱RB201	E-1
		✱RB202	B-1
E1	N-1	✱RB203	K-4
E200	E-4		
E201	D-1	S1	R-4
E202	J-1	S201	B-1
IC1	P-3	TP1	R-2
IC2	N-3	TP100	A-4
IC3	N-3	TP103	B-4
IC4	K-3	TP201	A-2
IC5	L-1	TP202	A-2
IC6	M-2	TP203	D-1
IC7	R-1	TP205	H-3
IC9	P-5	TP206	G-3
IC10	R-2	TP207	F-4
IC11	P-2	TP211	G-2
IC12	N-2	TP216	H-2
IC13	R-4	TP217	G-3
IC14	R-4	TP219	D-1
IC15	N-2	TP223	H-2
IC100	A-3	TP224	J-2
IC101	A-5	TP225	C-1
IC102	A-5		
IC103	B-5	X1	R-2
IC200	E-3	X101	A-3
IC201	F-4	X200	G-1
IC202	E-2		
IC203	E-3		
IC204	D-4		
IC206	E-3		
IC207	D-3		
IC208	D-3		
IC209	D-3		
IC210	D-3		
IC211	B-2		
IC212	C-2		
IC213	C-3		
IC214	E-3		
IC215	G-3		
IC216	G-3		
IC217	G-3		
IC219	H-1		
IC220	J-3		
IC221	J-4		

✱ : B SIDE

SS-53A(2/4);TC GENERATOR/READER

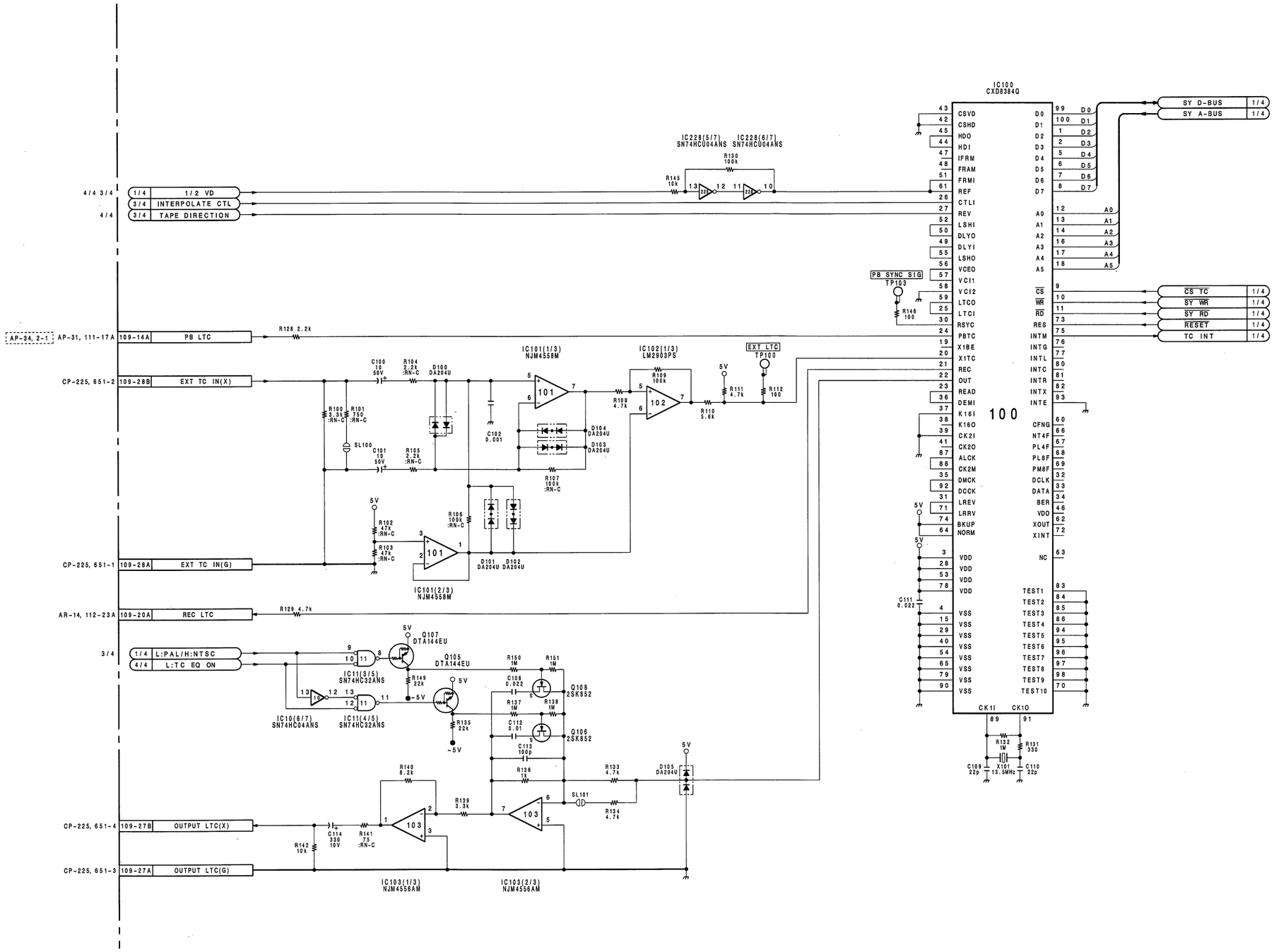

NOTE; [ ] (CONNECTOR' S DESTINATION)
For UVW-1200/1200P

SS-53A BOARD (2/4)

BOARD NO. 1-648-903-11
UVW-1400/1200 (J) ;#10001-
UVW-1400/1200 (UC) ;#10001-
UVW-1400P/1200P (EK) ;#10001-

SS-53A(1-648-903-11)

CNI4	K-3	IC222	J-3
CNI212	C-2	IC223	J-4
		IC224	J-3
CN1	E-1	IC225	J-3
CN2	F-1	IC226	C-4
CN3	P-1	IC227	A-2
CN107	N-6	IC228	F-2
CN108	K-6	IC229	L-3
CN109	C-6	IC230	H-3
		IC231	L-3
CV1	N-1	IC232	L-4
		IC233	M-3
✱D100	A-5		
✱D101	A-5	PS1	L-5
✱D102	A-5	PS2	M-5
✱D103	A-5		
✱D104	A-5	✱Q105	B-5
✱D105	B-4	✱Q106	B-5
✱D200	E-3	✱Q107	B-4
✱D201	E-3	✱Q108	B-5
✱D202	E-3	✱Q204	D-5
✱D203	E-3	✱Q205	D-5
✱D204	E-3	✱Q206	D-5
✱D205	E-2	✱Q207	D-5
✱D206	F-3	✱Q208	D-5
✱D207	F-3	✱Q209	D-5
✱D208	E-3	✱Q210	J-3
✱D210	G-4	✱Q211	J-3
✱D211	E-2		
✱D213	E-3	✱RB1	P-3
✱D214	J-6	✱RB2	R-2
✱D215	J-5	✱RB201	E-1
		✱RB202	B-1
E1	N-1	✱RB203	K-4
E200	E-4		
E201	D-1	S1	R-4
E202	J-1	S201	B-1
IC1	P-3	TP1	R-2
IC2	N-3	TP100	A-4
IC3	N-3	TP103	B-4
IC4	K-3	TP201	A-2
IC5	L-1	TP202	A-2
IC6	M-2	TP203	D-1
IC7	R-1	TP205	H-3
IC9	P-5	TP206	G-3
IC10	R-2	TP207	F-4
IC11	P-2	TP211	G-2
IC12	N-2	TP216	H-2
IC13	R-4	TP217	G-3
IC14	R-4	TP219	D-1
IC15	N-2	TP223	H-2
IC100	A-3	TP224	J-2
IC101	A-5	TP225	C-1
IC102	A-5		
IC103	B-5	X1	R-2
IC200	E-3	X101	A-3
IC201	F-4	X200	G-1
IC202	E-2		
IC203	E-3		
IC204	D-4		
IC206	E-3		
IC207	D-3		
IC208	D-3		
IC209	D-3		
IC210	D-3		
IC211	B-2		
IC212	C-2		
IC213	C-3		
IC214	E-3		
IC215	G-3		
IC216	G-3		
IC217	G-3		
IC219	H-1		
IC220	J-3		
IC221	J-4		

✱ : B SIDE

SS-53A(3/4);SERVO MAIN

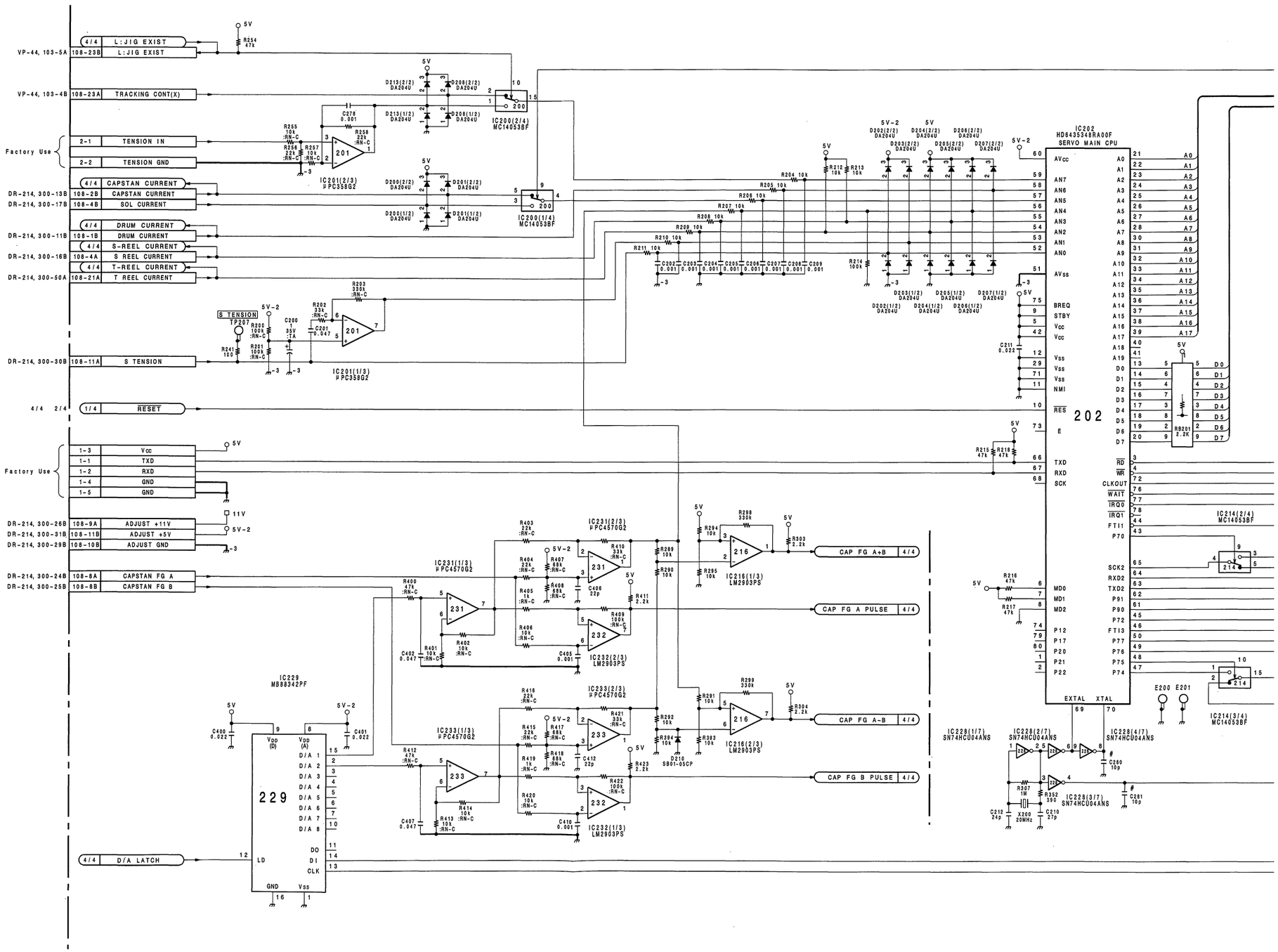

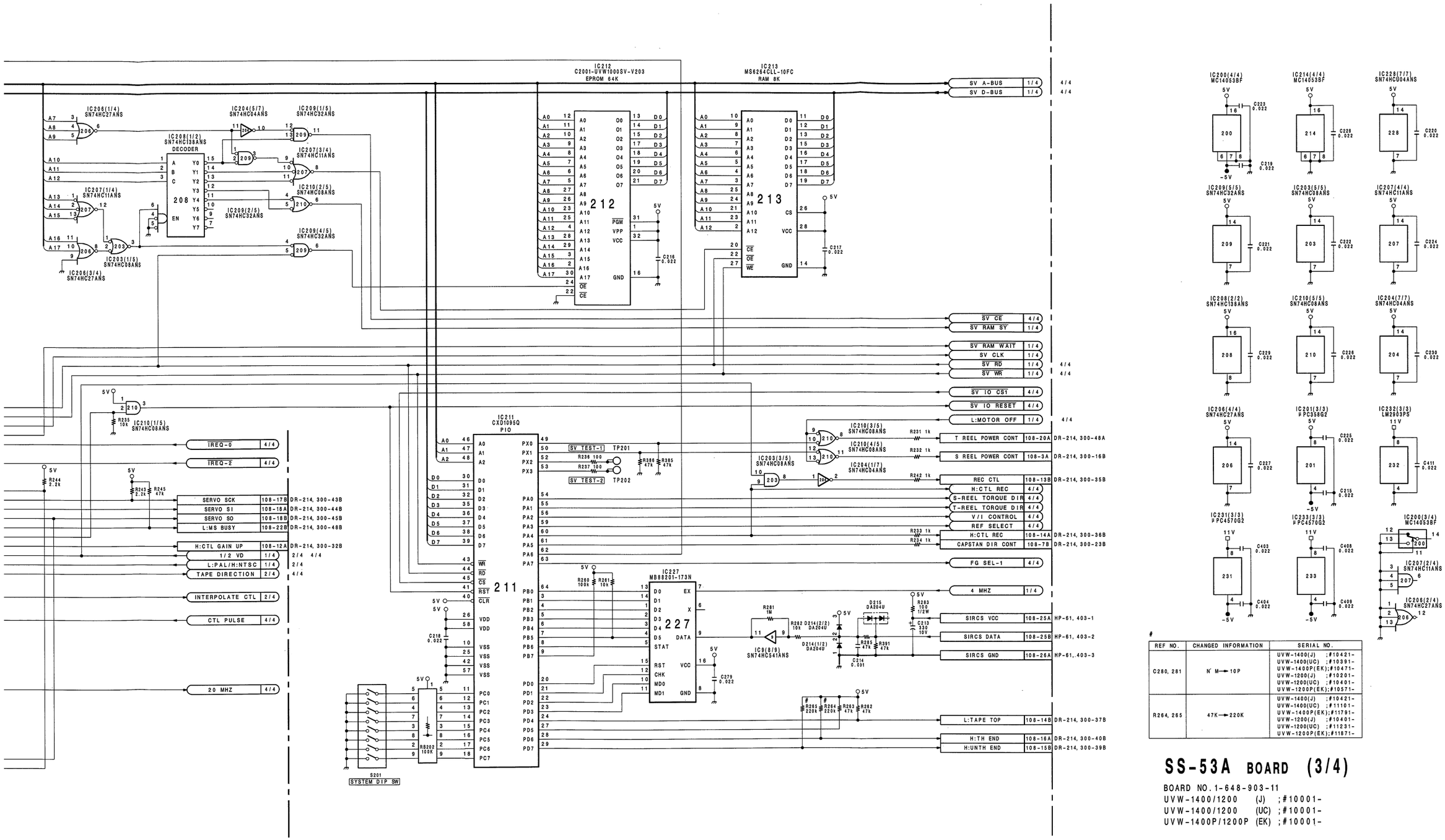

REF NO.	CHANGED INFORMATION	SERIAL NO.
C280, 281	N' M→10P	UVW-1400(J) ;#10421- UVW-1400(UC) ;#10391- UVW-1400P(EK);#10471- UVW-1200(J) ;#10201- UVW-1200(UC) ;#10401- UVW-1200P(EK);#10571-
R264, 265	47K→220K	UVW-1400(J) ;#10421- UVW-1400(UC) ;#11101- UVW-1400P(EK);#11791- UVW-1200(J) ;#10401- UVW-1200(UC) ;#11231- UVW-1200P(EK);#11871-

SS-53A BOARD (3/4)

BOARD NO.1-648-903-11
UVW-1400/1200 (J) ;#10001-
UVW-1400/1200 (UC) ;#10001-
UVW-1400P/1200P (EK) ;#10001-

SS-53A (1-648-903-11)

CNI4	K-3	IC223	J-4
CNI212	C-2	IC224	J-3
		IC225	J-3
CN1	E-1	IC226	C-4
CN2	F-1	IC227	A-2
CN3	P-1	IC228	F-2
CN107	N-6	IC229	L-3
CN108	K-6	IC230	H-3
CN109	C-6	IC231	L-3
		IC232	L-4
CV1	N-1	IC233	M-3
*D100	A-5	PS1	L-5
*D101	A-5	PS2	M-5
*D102	A-5		
*D103	A-5	*Q105	B-5
*D104	A-5	*Q106	B-5
*D105	B-4	*Q107	B-4
*D200	E-3	*Q108	B-5
*D201	E-3	*Q204	D-5
*D202	E-3	*Q205	D-5
*D203	E-3	*Q206	D-5
*D204	E-3	*Q207	D-5
*D205	E-2	*Q208	D-5
*D206	F-3	*Q209	D-5
*D207	F-3	*Q210	J-3
*D208	E-3	*Q211	J-3
*D210	G-4		
*D211	E-2	*RB1	P-3
*D213	E-3	*RB2	R-2
*D214	J-6	*RB201	E-1
*D215	J-5	*RB202	B-1
		*RB203	K-4
E1	N-1		
E200	E-4	S1	R-4
E201	D-1	S201	B-1
E202	J-1		
		TP1	R-2
IC1	P-3	TP100	A-4
IC2	N-3	TP103	B-4
IC3	N-3	TP201	A-2
IC4	K-3	TP202	A-2
IC5	L-1	TP203	D-1
IC6	M-2	TP205	H-3
IC7	R-1	TP206	G-3
IC8	R-5	TP207	F-4
IC9	P-5	TP211	G-2
IC10	R-2	TP216	H-2
IC11	P-2	TP217	G-3
IC12	N-2	TP219	D-1
IC15	N-2	TP223	H-2
IC100	A-3	TP224	J-2
IC101	A-5	TP225	C-1
IC102	A-5		
IC103	B-5	X1	R-2
IC200	E-3	X101	A-3
IC201	F-4	X200	G-1
IC202	E-2		
IC203	E-3		
IC204	D-4		
IC206	E-3		
IC207	D-3		
IC208	D-3		
IC209	D-3		
IC210	D-3		
IC211	B-2		
IC212	C-2		
IC213	C-3		
IC214	E-3		
IC215	G-3		
IC216	G-3		
IC217	G-3		
IC219	H-1		
IC220	J-3		
IC221	J-4		
IC222	J-3		

* : B SIDE

For J,UC

① TP219 EE/REC/PB

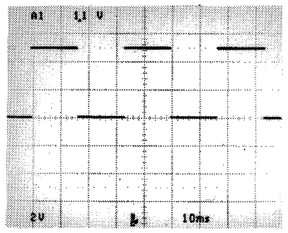

② TP225 PB

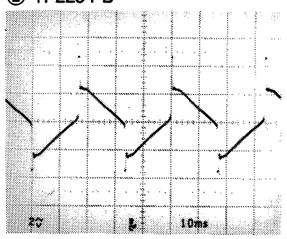

For EK

① TP219 EE/REC/PB

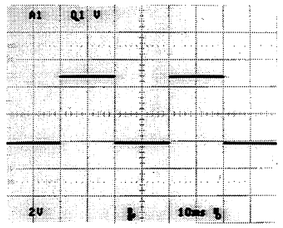

② TP225 PB

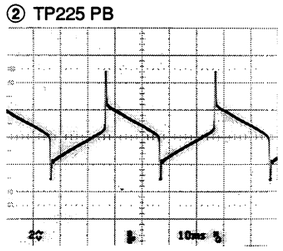

SS-53A(4/4);SERVO

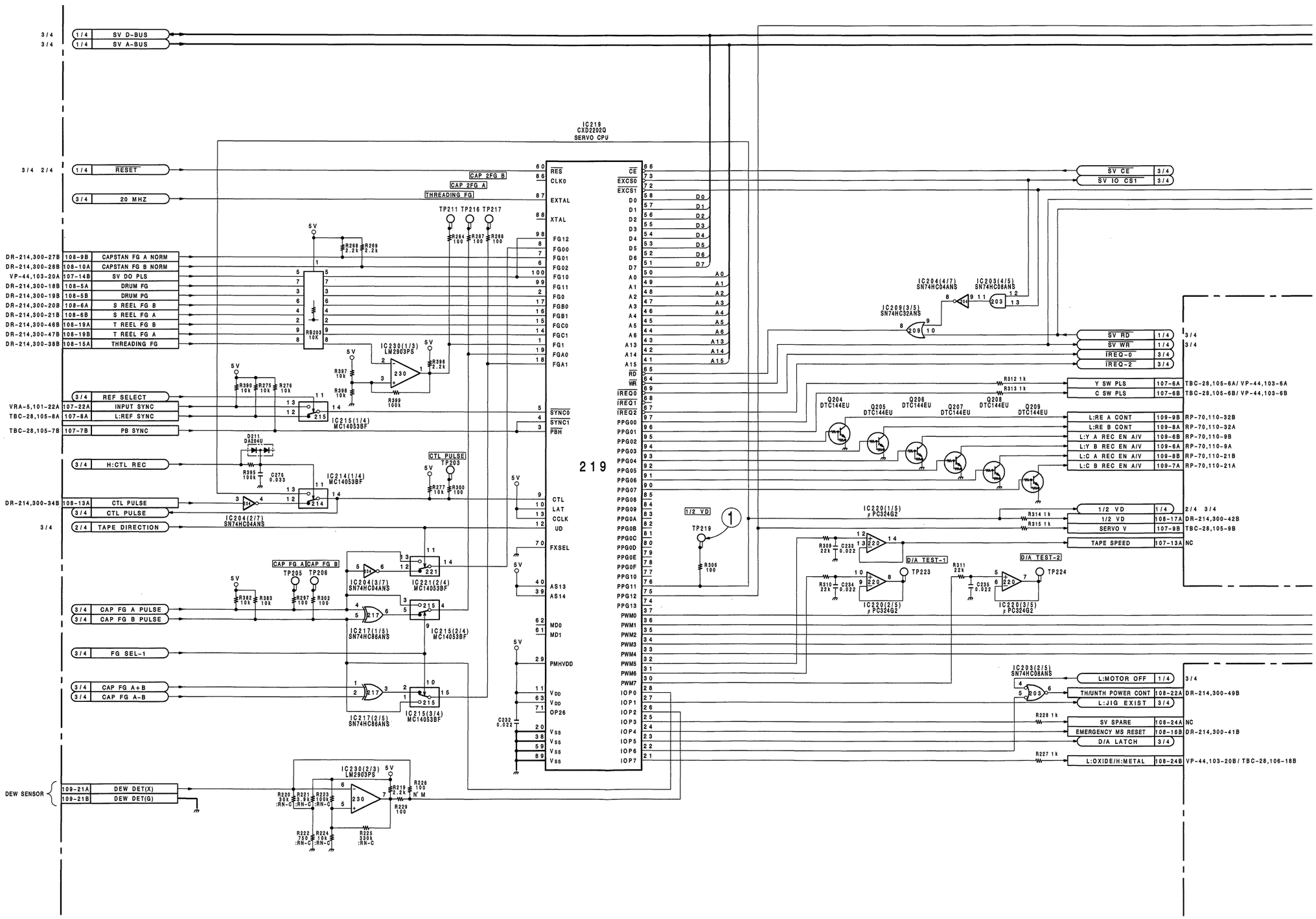

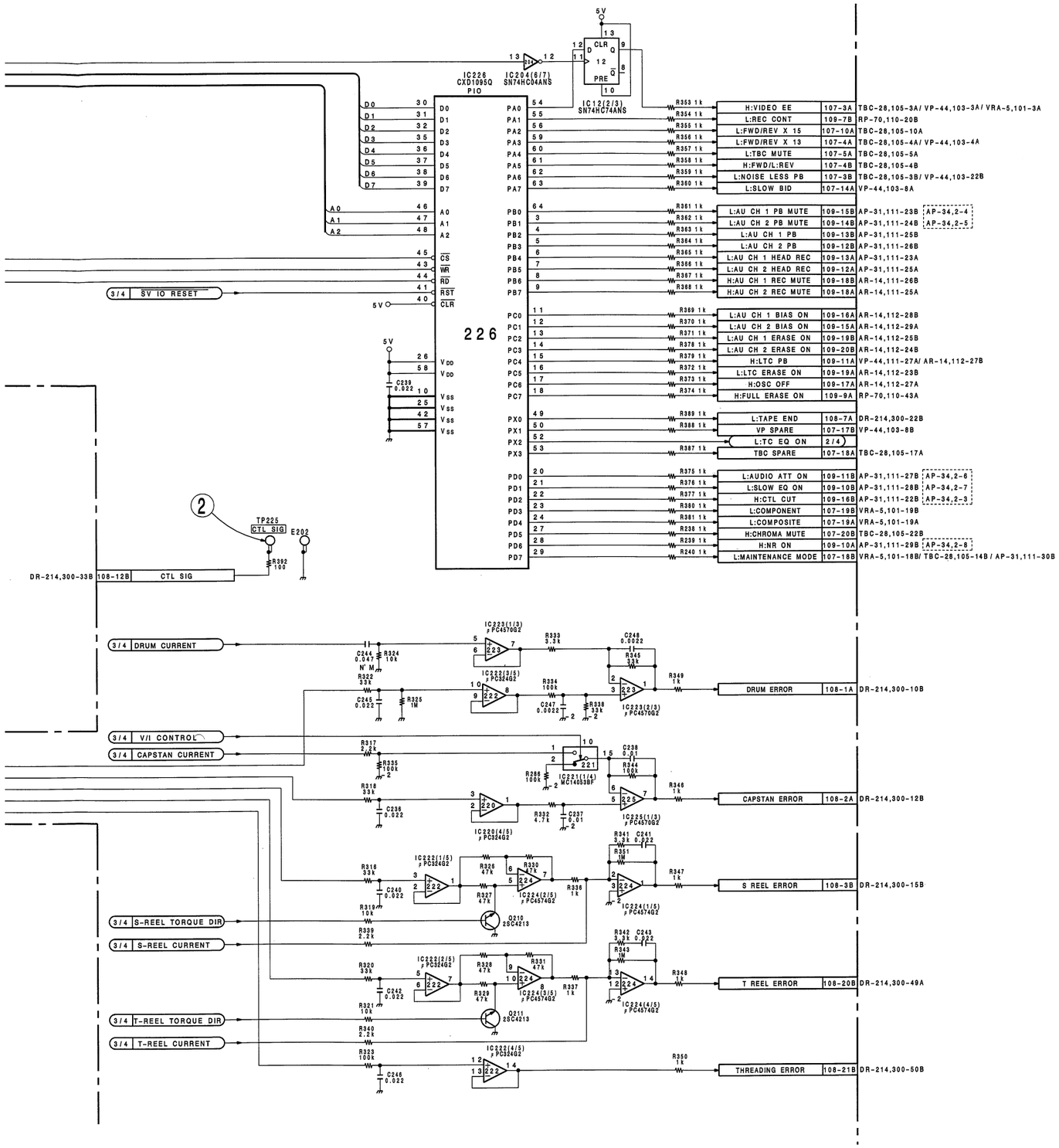
IC226 CXD1095Q PIO
IC204(6/7) SN74HC04ANS
IC12(2/3) SN74HC74ANS
226
3/4 SV IO RESET
DR-214,300-33B 108-12B CTL SIG
TP225 CTL SIG
E202
R392 100
3/4 DRUM CURRENT
3/4 V/I CONTROL
3/4 CAPSTAN CURRENT
3/4 S-REEL TORQUE DIR
3/4 S-REEL CURRENT
3/4 T-REEL TORQUE DIR
3/4 T-REEL CURRENT
H:VIDEO EE 107-3A TBC-28,105-3A/ VP-44,103-3A/ VRA-5,101-3A
L:REC CONT 109-7B RP-70,110-20B
L:FWD/REV X 15 107-10A TBC-28,105-10A
L:FWD/REV X 13 107-4A TBC-28,105-4A/ VP-44,103-4A
L:TBC MUTE 107-5A TBC-28,105-5A
H:FWD/L:REV 107-4B TBC-28,105-4B
L:NOISE LESS PB 107-3B TBC-28,105-3B/ VP-44,103-22B
L:SLOW BID 107-14A VP-44,103-8A
L:AU CH 1 PB MUTE 109-15B AP-31,111-23B AP-34,2-4
L:AU CH 2 PB MUTE 109-14B AP-31,111-24B AP-34,2-5
L:AU CH 1 PB 109-13B AP-31,111-25B
L:AU CH 2 PB 109-12B AP-31,111-26B
L:AU CH 1 HEAD REC 109-13A AP-31,111-23A
L:AU CH 2 HEAD REC 109-12A AP-31,111-25A
H:AU CH 1 REC MUTE 109-18B AR-14,111-26B
H:AU CH 2 REC MUTE 109-18A AR-14,111-25A
L:AU CH 1 BIAS ON 109-16A AR-14,112-28B
L:AU CH 2 BIAS ON 109-15A AR-14,112-29A
L:AU CH 1 ERASE ON 109-19B AR-14,112-25B
L:AU CH 2 ERASE ON 109-20B AR-14,112-24B
H:LTC PB 109-11A VP-44,111-27A/ AR-14,112-27B
L:LTC ERASE ON 109-19A AR-14,112-23B
H:OSC OFF 109-17A AR-14,112-27A
H:FULL ERASE ON 109-9A RP-70,110-43A
L:TAPE END 108-7A DR-214,300-22B
VP SPARE 107-17B VP-44,103-8B
L:TC EQ ON 2/4
TBC SPARE 107-18A TBC-28,105-17A
L:AUDIO ATT ON 109-11B AP-31,111-27B AP-34,2-6
L:SLOW EQ ON 109-10B AP-31,111-28B AP-34,2-7
H:CTL CUT 109-16B AP-31,111-22B AP-34,2-3
L:COMPONENT 107-19B VRA-5,101-19B
L:COMPOSITE 107-19A VRA-5,101-19A
H:CHROMA MUTE 107-20B TBC-28,105-22B
H:NR ON 109-10A AP-31,111-29B AP-34,2-8
L:MAINTENANCE MODE 107-18B VRA-5,101-18B/ TBC-28,105-14B/ AP-31,111-30B
DRUM ERROR 108-1A DR-214,300-10B
CAPSTAN ERROR 108-2A DR-214,300-12B
S REEL ERROR 108-3B DR-214,300-15B
T REEL ERROR 108-20B DR-214,300-49A
THREADING ERROR 108-21B DR-214,300-50B

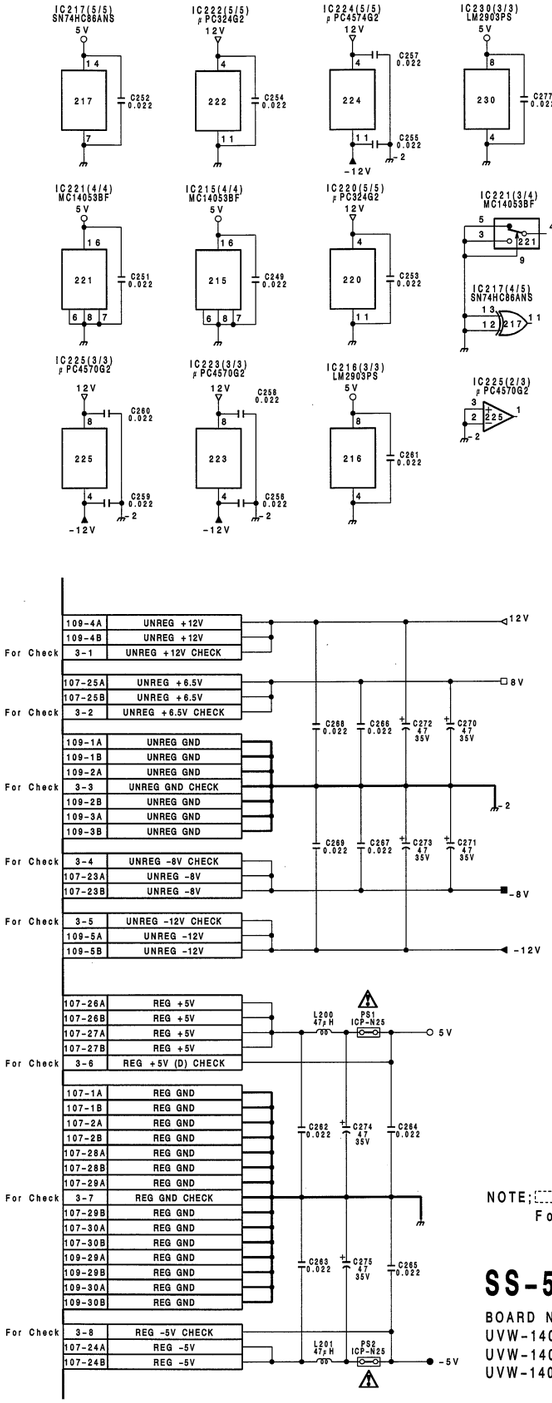

NOTE; (CONNECTOR' S DESTINATION)
For UVW-1200/1200P

SS-53A BOARD (4/4)

BOARD NO.1-648-903-11
UVW-1400/1200 (J) ; #10001-
UVW-1400/1200 (UC); #10001-
UVW-1400P/1200P(EK); #10001-

TBC-28/28P (1-648-902-11,12,13)

CN1		E-1	IC405		R-4	✱Q200		R-3	TP500		E-1
CN2		C-6	IC406		M-5	✱Q201		R-3	TP501		E-1
CN105		N-6	IC407		N-4	✱Q202		P-3	TP502		D-1
CN106		C-6	IC408		M-4	✱Q203		P-3	TP503	N	H-1
			◎IC409		N-5	✱Q300		P-1	TP700		A-5
CV700		C-4	IC501		L-2	✱Q301		P-1	TP701		B-1
CV701		B-3	IC502		L-4	✱Q302		P-1	TP702		C-4
CV702		A-3	IC503		J-2	✱Q303		P-1	TP703		D-4
			IC504		J-4	✱Q304		N-2	TP704		C-1
✱D1		M-2	IC505		H-2	✱Q305		N-2	TP705		A-3
✱D2		M-3	IC506		H-3	✱Q306		R-2	TP706		C-3
✱D100		M-3	IC507		G-6	✱Q400		P-5	TP707	N	B-3
✱D101		N-3	IC508		H-4	✱Q401		P-5	△TP708	N	A-1
✱D102		R-3	IC509		G-3	✱Q402		R-5			
✱D200		M-3	IC510		F-6	✱Q403		P-5	X700		D-4
✱D301		N-2	IC511		H-1	✱Q404		M-4	X701		B-2
✱D302		R-2	IC512		F-3	✱Q405		R-4	X702		A-2
✱D303		R-2	IC513		F-4	✱Q406		R-5			
✱D304		R-2	IC514		H-1	✱Q407		N-4			
✱D305	P	P-2	IC516		F-1	✱Q501		F-1			
✱D401		P-4	IC518		F-3	✱Q502		E-1			
✱D402		N-4	IC519		E-2	✱Q503		D-1			
✱D403		M-4	IC520		D-2	✱Q700		A-5			
✱D404		M-4	IC522		G-2	✱Q701		A-5			
✱D502		K-2	IC523		F-4	Q702		B-1			
✱D503		K-2	IC524		E-3	✱Q703		C-2			
✱D505		G-1	IC525		E-3	✱Q704		B-2			
✱D506		M-5	IC526		D-3	✱Q705		B-2			
✱D700		C-4	IC527		D-3	✱Q706		C-2			
✱D703		B-2	IC528		H-3	Q707		B-4			
✱D704		A-2	IC529	N	F-2	✱Q708		D-5			
✱D705		C-2	IC530	N	G-2	✱Q709		C-5			
✱D706		A-1	IC531	N	G-2	✱Q710		B-5			
△✱D707	N	A-1	IC532	N	G-2	✱Q711		B-5			
			IC533	N	G-1	✱Q712		B-5			
E200		N-3	IC534	N	G-1	✱Q713		B-4			
E300		M-1	IC535	N	G-1	✱Q714		B-4			
E400		R-5	IC700		B-4	✱Q715		B-5			
E500		D-1	IC701		B-1	✱Q716		B-4			
E501		J-3	◎IC702		B-5	✱Q717		B-2			
E700		B-1	IC703		A-5	✱Q718		B-2			
E701		C-5	IC704		B-4	✱Q719	N	B-2			
			IC705		C-4	✱Q720	N	A-2			
FL500		F-2	IC706		A-5	✱Q721		A-2			
FL501		E-1	IC707		C-3	✱Q722		A-2			
FL502		D-1	IC708		C-4	◎Q723		A-5			
			IC709		A-1						
IC1		M-2	IC710		D-2	RV100		R-3			
IC2		M-3	IC711		D-3	RV200		R-3			
IC3		L-1	IC712		C-4	RV300		M-1			
IC4		L-4	IC713		A-4	RV301		N-1			
IC5		E-6	IC714		F-5	RV400		P-1			
IC6		L-1	IC715		A-1	RV401		P-5			
IC7		L-5	IC716		B-5	RV500		F-1			
IC8	P	B-5	◎IC717		C-5	RV501		F-1			
IC100		P-3	IC718		D-5	RV502		D-1			
IC101		P-3	IC719		B-3	RV700		B-1			
IC102		M-3	IC720	P	C-2	RV701		A-1			
IC103		M-2	IC721		C-2	RV703		B-1			
IC200		P-3	IC722		E-5	RV706		C-1			
IC203		M-3	IC723		B-5	RV707		B-1			
IC300		P-1	◎IC724		B-6						
IC301		P-2	IC727	N	D-2	S500		J-1			
IC302		R-1	IC728		C-4						
IC303		M-1	IC729		D-4	TH400		R-5			
IC304		M-2	IC730		C-3						
IC305		N-2	IC732		A-3	TP100		R-3			
IC306		M-2				TP101		N-3			
IC307		R-2	LV300		R-2	TP200		R-3			
IC308		R-2	LV400		M-4	TP201		N-3			
IC309	P	R-2				TP300		R-1			
IC400		R-5	✱Q100		R-3	TP301		P-2			
IC401		N-5	✱Q101		R-3	TP303		P-2			
IC402		R-5	✱Q102		P-3	TP400		M-5			
IC403		R-5	✱Q103		P-3	TP401		N-4			
IC404		R-4	✱Q104		R-3	TP402		N-4			

✱ : B SIDE
N : UVW-1400/1200 ONLY
P : UVW-1400P/1200P ONLY
△ : 1-648-902-11 ONLY
◎ : 1-648-902-12,13 ONLY

For J,UC

① TP101 PB

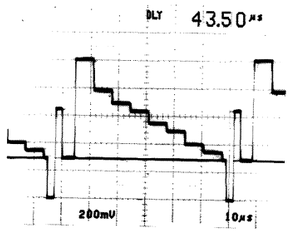

② TP201 PB

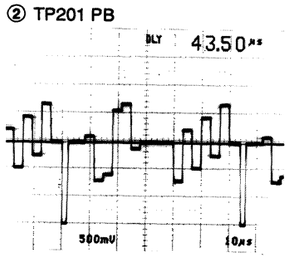

③ TP500 PB

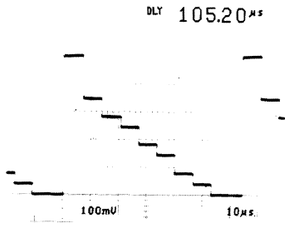

④ TP501 PB

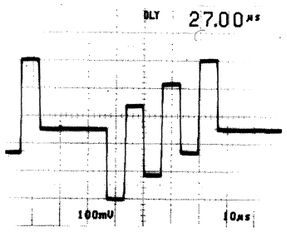

⑤ TP502 PB

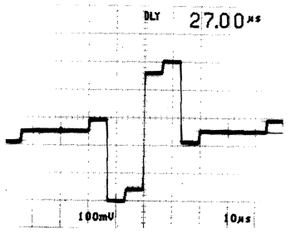

For EK

① TP101 PB

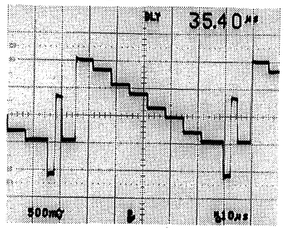

② TP201 PB

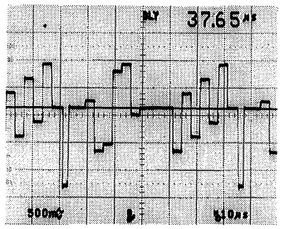

③ TP500 PB

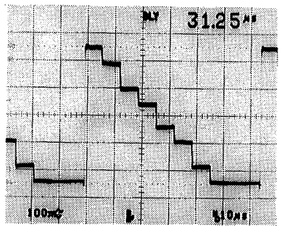

④ TP501 PB

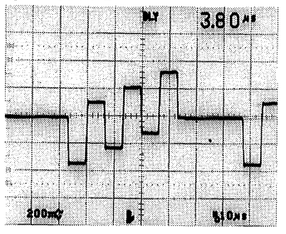

⑤ TP502 PB

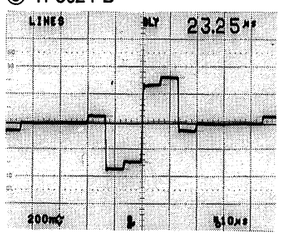

TBC-28/28P (1/4)

UVW-1400(J)	:Serial No.	10001 through 10420
UVW-1400(UC)	:Serial No.	10001 through 11050
UVW-1400P(EK)	:Serial No.	10001 through 11490
UVW-1200(J)	:Serial No.	10001 through 10350
UVW-1200(UC)	:Serial No.	10001 through 11090
UVW-1200P(EK)	:Serial No.	10001 through 11720

TBC-28/28P(1/4);A/D, MEMORY, D/A SEQUENCER

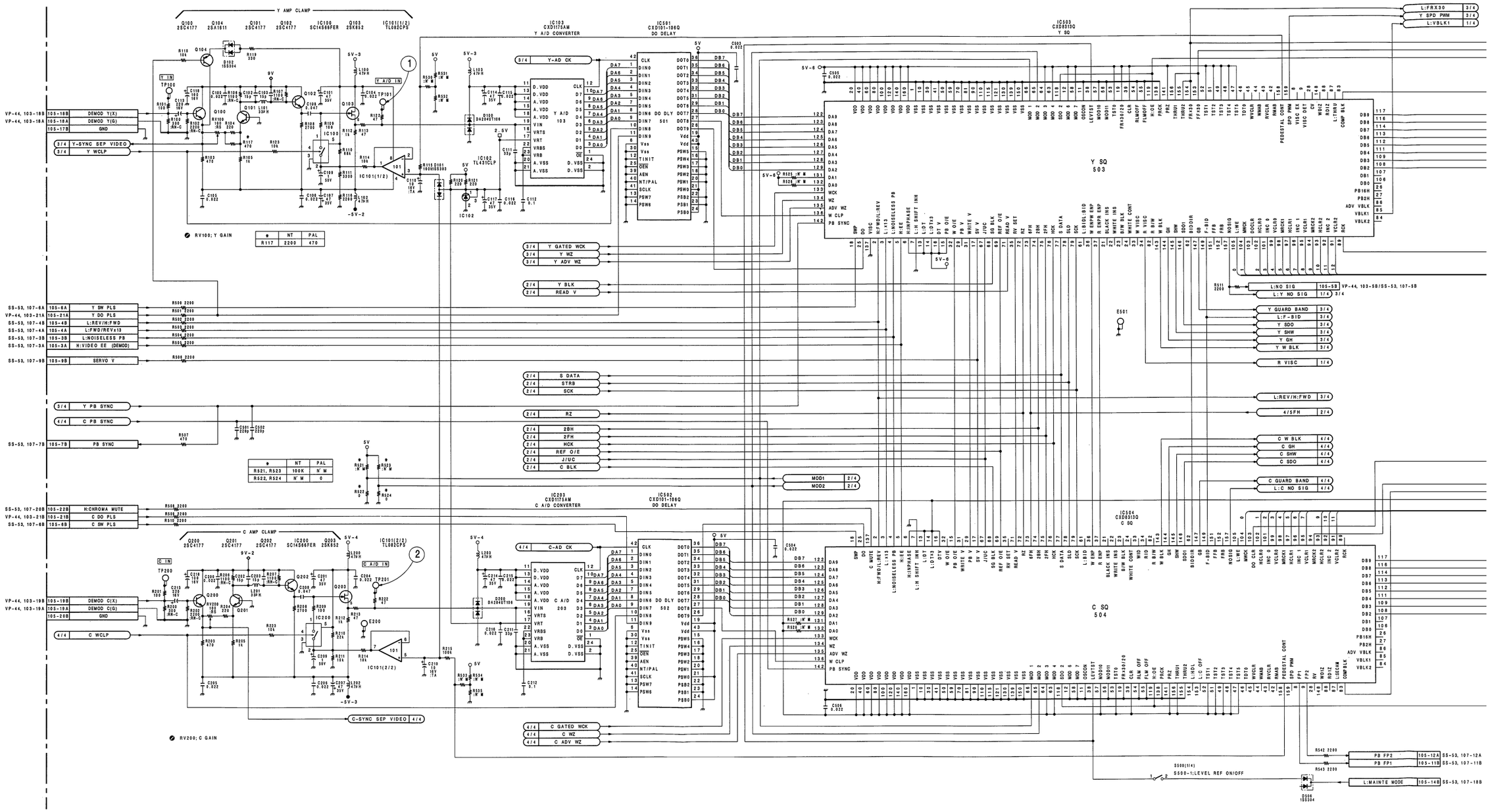

*	NT	PAL
R117	2200	470

*	NT	PAL
R521, R523	100K	N.M
R522, R524	N.M	0

16-58 (a)

TBC-28/28P (1/4)

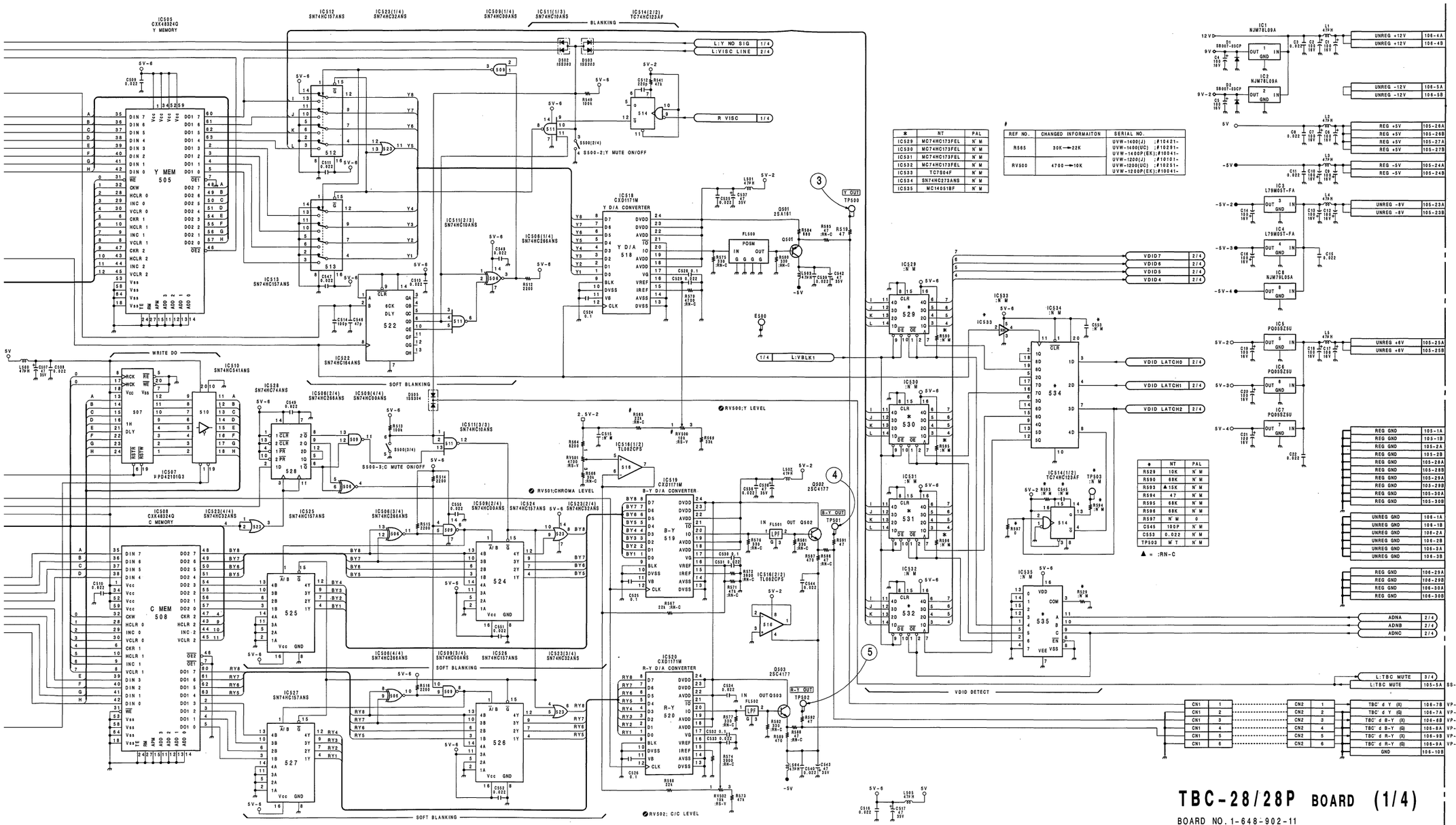

*	NT	PAL
IC529	MC74HC173FEL	N M
IC530	MC74HC173FEL	N M
IC531	MC74HC173FEL	N M
IC532	MC74HC173FEL	N M
IC533	TC7S04F	N M
IC534	SN74HC279ANS	N M
IC535	MC14051BF	N M

#		
REF NO.	CHANGED INFORMAITON	SERIAL NO.
R565	30K⟶22K	UVW-1400(J) :#10421- UVW-1400(UC) :#10291- UVW-1400P(EK):#10041- UVW-1200(J) :#10101- UVW-1200(UC) :#10251- UVW-1200P(EK):#10041-
RV500	4700⟶10K	

*	NT	PAL
R529	10K	N M
R590	68K	N M
R593	▲15K	N M
R594	47	N M
R595	68K	N M
R596	68K	N M
R597	N M	0
C545	100P	N M
C553	0.022	N M
TP503	M T	N M

▲ = :RN-C

TBC-28/28P BOARD (1/4)

BOARD NO.1-648-902-11
UVW-1400 (J) ;#10001-10420
UVW-1400 (UC) ;#10001-11050
UVW-1400P (EK) ;#10001-11490
UVW-1200 (J) ;#10001-10350
UVW-1200 (UC) ;#10001-11090
UVW-1200P (EK) ;#10001-11720

UVW-1400(J)	:Serial No. 10421 and higher
UVW-1400(UC)	:Serial No. 11051 and higher
UVW-1400P(EK)	:Serial No. 11491 and higher
UVW-1200(J)	:Serial No. 10351 and higher
UVW-1200(UC)	:Serial No. 11091 and higher
UVW-1200P(EK)	:Serial No. 11721 and higher

TBC-28/28P(1/4);A/D, MEMORY, D/A SEQUENCER

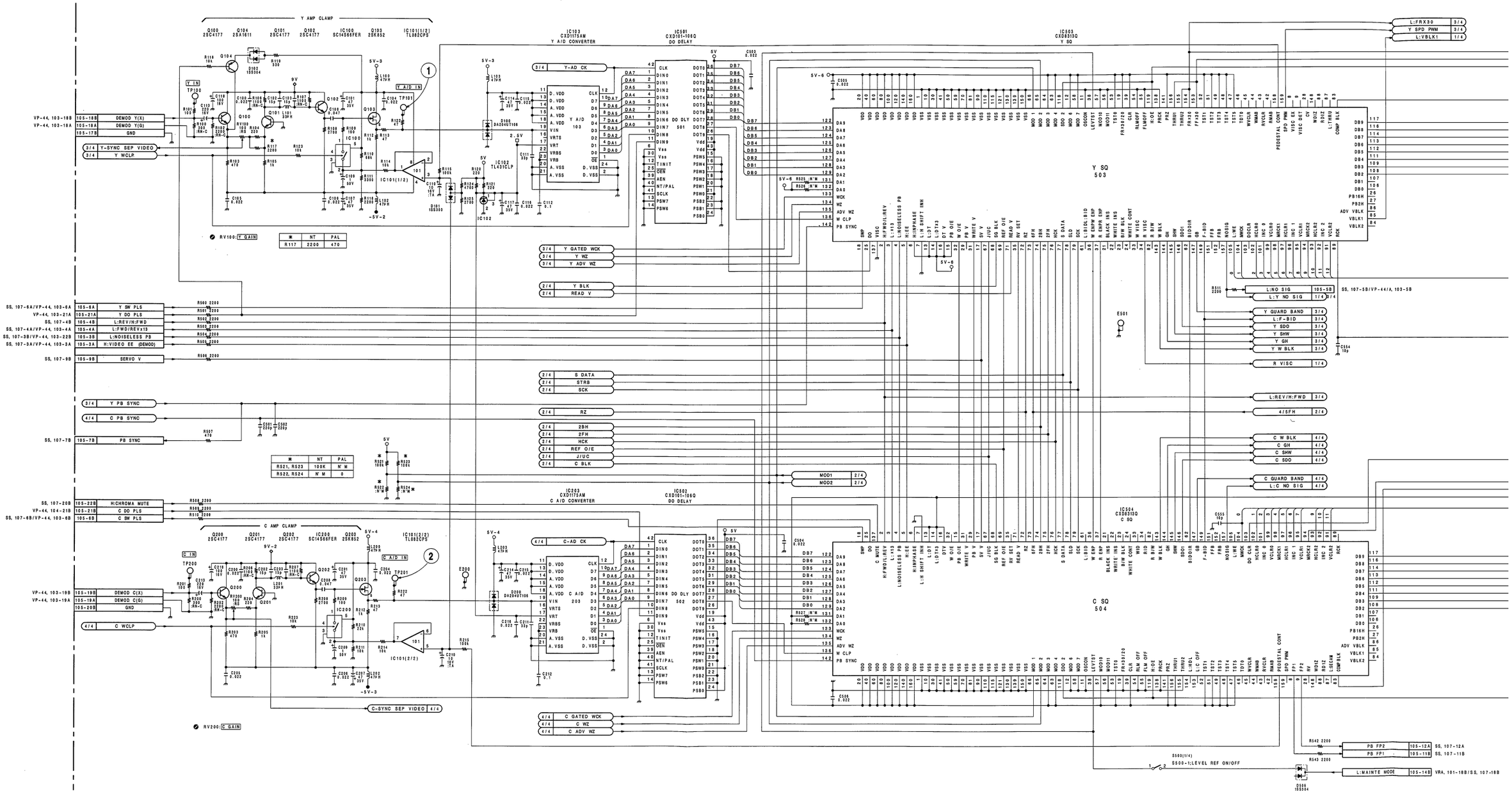

TBC-28/28P (1/4)

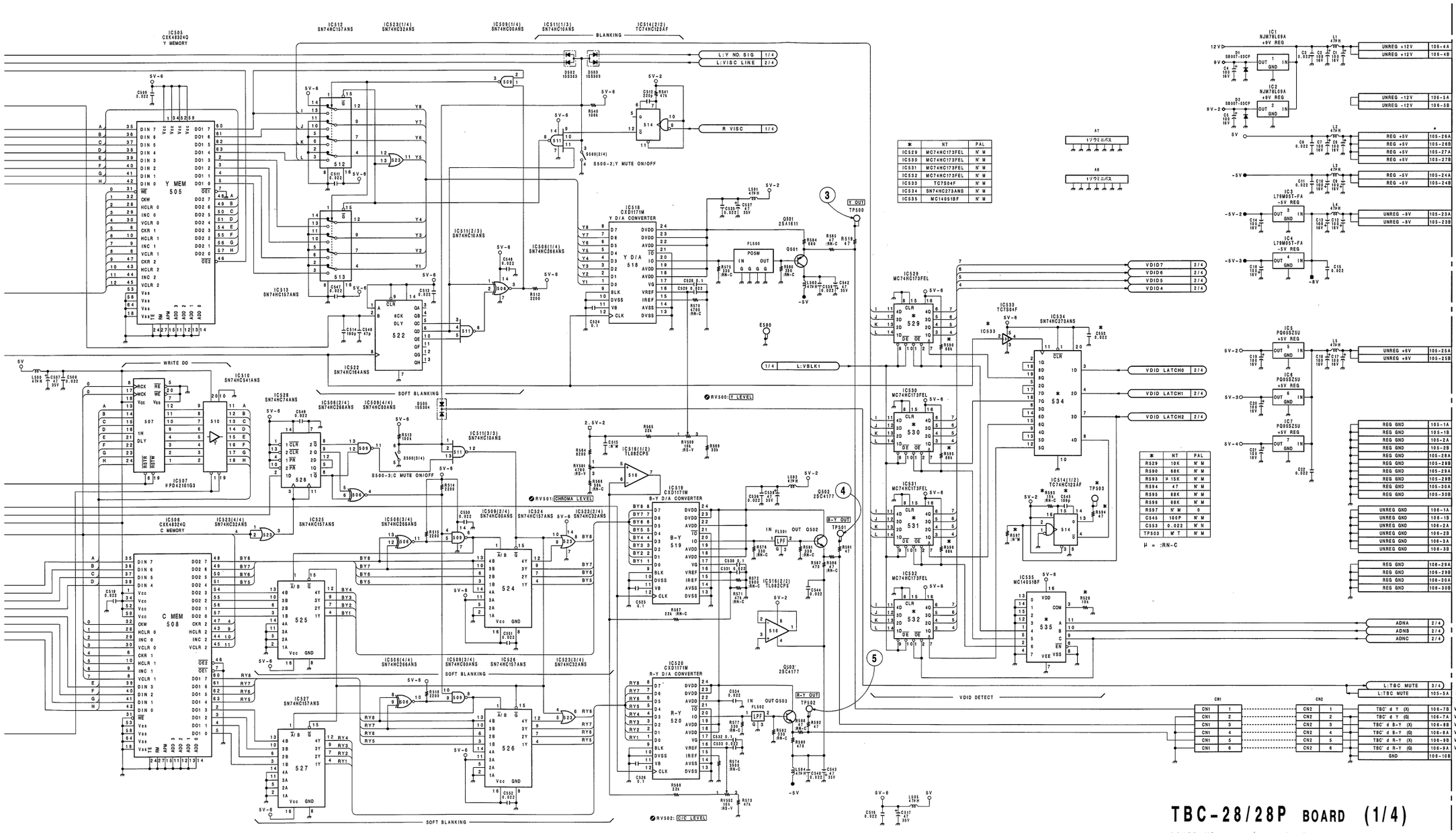

TBC-28/28P BOARD (1/4)

BOARD NO. 1-648-902-12, 13
UVW-1400 (J) ;#10421-
UVW-1400 (UC) ;#11051-
UVW-1400P (EK) ;#11491-
UVW-1200 (J) ;#10351-
UVW-1200 (UC) ;#11091-
UVW-1200P (EK) ;#11721-

TBC-28/28P (1-648-902-11,12,13)

CN1		E-1	IC405		R-4	✱Q200		R-3	TP500		E-1
CN2		C-6	IC406		M-5	✱Q201		R-3	TP501		E-1
CN105		N-6	IC407		N-4	✱Q202		P-3	TP502		D-1
CN106		C-6	IC408		M-4	✱Q203		P-3	TP503	N	H-1
			◎ IC409		N-5	✱Q300		P-1	TP700		A-5
CV700		C-4	IC501		L-2	✱Q301		P-1	TP701		B-1
CV701		B-3	IC502		L-4	✱Q302		P-1	TP702		C-4
CV702		A-3	IC503		J-2	✱Q303		P-1	TP703		D-4
			IC504		J-4	✱Q304		N-2	TP704		C-1
✱D1		M-2	IC505		H-2	✱Q305		N-2	TP705		A-3
✱D2		M-3	IC506		H-3	✱Q306		R-2	TP706		C-3
✱D100		M-3	IC507		G-6	✱Q400		P-5	TP707	N	B-3
✱D101		N-3	IC508		H-4	✱Q401		P-5	△ TP708	N	A-1
✱D102		R-3	IC509		G-3	✱Q402		R-5			
✱D200		M-3	IC510		F-6	✱Q403		P-5	X700		D-4
✱D301		N-2	IC511		H-1	✱Q404		M-4	X701		B-2
✱D302		R-2	IC512		F-3	✱Q405		R-4	X702		A-2
✱D303		R-2	IC513		F-4	✱Q406		R-5			
✱D304		R-2	IC514		H-1	✱Q407		N-4			
✱D305	P	P-2	IC516		F-1	✱Q501		F-1			
✱D401		P-4	IC518		F-3	✱Q502		E-1			
✱D402		N-4	IC519		E-2	✱Q503		D-1			
✱D403		M-4	IC520		D-2	✱Q700		A-5			
✱D404		M-4	IC522		G-2	✱Q701		A-5			
✱D502		K-2	IC523		F-4	Q702		B-1			
✱D503		K-2	IC524		E-3	✱Q703		C-2			
✱D505		G-1	IC525		E-3	✱Q704		B-2			
✱D506		M-5	IC526		D-3	✱Q705		B-2			
✱D700		C-4	IC527		D-3	✱Q706		C-2			
✱D703		B-2	IC528		H-3	Q707		B-4			
✱D704		A-2	IC529	N	F-2	✱Q708		D-5			
✱D705		C-2	IC530	N	G-2	✱Q709		C-5			
✱D706		A-1	IC531	N	G-2	✱Q710		B-5			
△✱D707	N	A-1	IC532	N	G-2	✱Q711		B-5			
			IC533	N	G-1	✱Q712		B-5			
E200		N-3	IC534	N	G-1	✱Q713		B-4			
E300		M-1	IC535	N	G-1	✱Q714		B-4			
E400		R-5	IC700		B-4	✱Q715		B-5			
E500		D-1	IC701		B-1	✱Q716		B-4			
E501		J-3	◎ IC702		B-5	✱Q717		B-2			
E700		B-1	IC703		A-5	✱Q718		B-2			
E701		C-5	IC704		B-4	✱Q719	N	B-2			
			IC705		C-4	✱Q720	N	A-2			
FL500		F-2	IC706		A-5	✱Q721		A-2			
FL501		E-1	IC707		C-3	✱Q722		A-2			
FL502		D-1	IC708		C-4	◎ Q723		A-5			
			IC709		A-1						
IC1		M-2	IC710		D-2	RV100		R-3			
IC2		M-3	IC711		D-3	RV200		R-3			
IC3		L-1	IC712		C-4	RV300		M-1			
IC4		L-4	IC713		A-4	RV301		N-1			
IC5		E-6	IC714		F-5	RV400		P-1			
IC6		L-1	IC715		A-1	RV401		P-5			
IC7		L-5	IC716		B-5	RV500		F-1			
IC8	P	B-5	◎ IC717		C-5	RV501		F-1			
IC100		P-3	IC718		D-5	RV502		D-1			
IC101		P-3	IC719		B-3	RV700		B-1			
IC102		M-3	IC720	P	C-2	RV701		A-1			
IC103		M-2	IC721		C-2	RV703		B-1			
IC200		P-3	IC722		E-5	RV706		C-1			
IC203		M-3	IC723		B-5	RV707		B-1			
IC300		P-1	◎ IC724		B-6						
IC301		P-2	IC727	N	D-2	S500		J-1			
IC302		R-1	IC728		C-4						
IC303		M-1	IC729		D-4	TH400		R-5			
IC304		M-2	IC730		C-3						
IC305		N-2	IC732		A-3	TP100		R-3			
IC306		M-2				TP101		N-3			
IC307		R-2	LV300		R-2	TP200		R-3			
IC308		R-2	LV400		M-4	TP201		N-3			
IC309	P	R-2				TP300		R-1			
IC400		R-5	✱Q100		R-3	TP301		P-2			
IC401		N-5	✱Q101		R-3	TP303		P-2			
IC402		R-5	✱Q102		P-3	TP400		M-5			
IC403		R-5	✱Q103		P-3	TP401		N-4			
IC404		R-4	✱Q104		R-3	TP402		N-4			

✱ : B SIDE
N : UVW-1400/1200 ONLY
P : UVW-1400P/1200P ONLY
△ : 1-648-902-11 ONLY
◎ : 1-648-902-12,13 ONLY

For J,UC

① TP701 PB

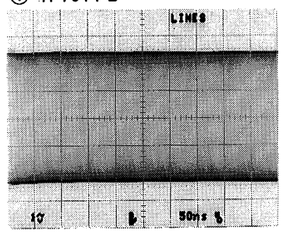

② TP703 PB

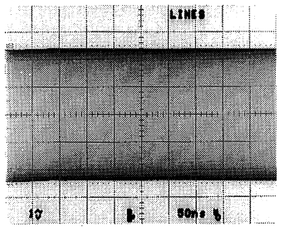

For EK

① TP701 PB

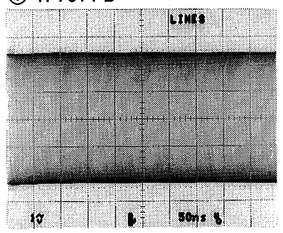

② TP703 PB

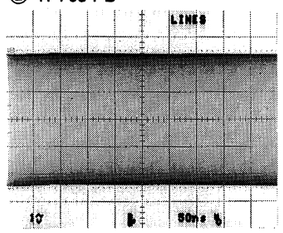

TBC-28/28P (2/4)

UVW-1400(J)	:Serial No.	10001	through	10420
UVW-1400(UC)	:Serial No.	10001	through	11050
UVW-1400P(EK)	:Serial No.	10001	through	11490
UVW-1200(J)	:Serial No.	10001	through	10350
UVW-1200(UC)	:Serial No.	10001	through	11090
UVW-1200P(EK)	:Serial No.	10001	through	11720

TBC-28/28P(2/4);SYNC/SC PROCESS, TBC MPU

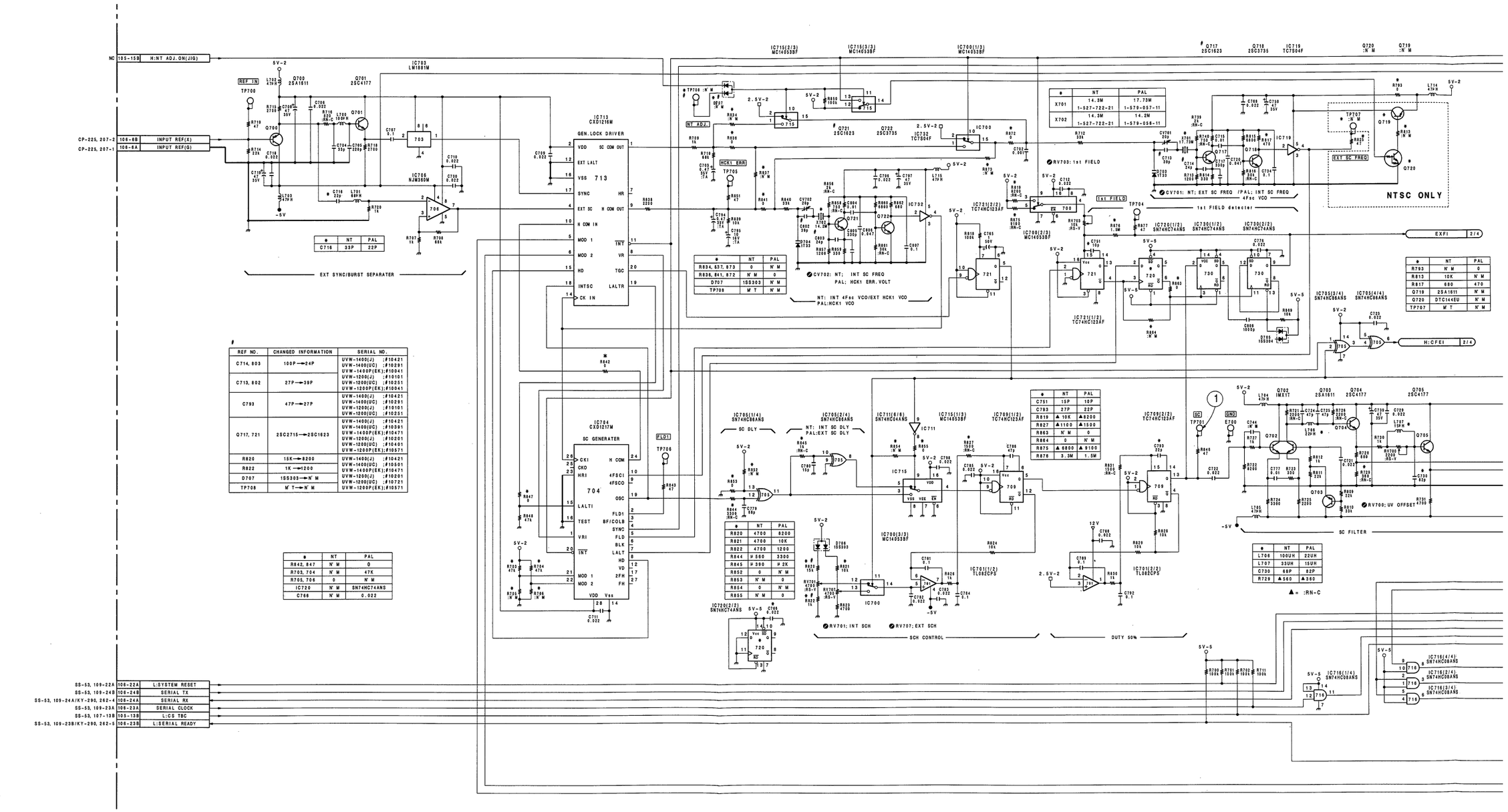

REF NO.	CHANGED INFORMATION	SERIAL NO.
C714, 803	100P→24P	UVW-1400(J) :#10421 UVW-1400(UC) :#10291 UVW-1400P(EK):#10041
C713, 802	27P→39P	UVW-1200(J) :#10101 UVW-1200(UC) :#10251 UVW-1200P(EK):#10041
C793	47P→27P	UVW-1400(J) :#10421 UVW-1400(UC) :#10291 UVW-1200(J) :#10101 UVW-1200(UC) :#10251
Q717, 721	2SC2715→2SC1623	UVW-1400(J) :#10421 UVW-1400(UC) :#10291 UVW-1400P(EK):#10471 UVW-1200(J) :#10201 UVW-1200(UC) :#10401 UVW-1200P(EK):#10571
R820	15K→8200	UVW-1400(J) :#10421
R822	1K→1200	UVW-1400(UC) :#10501 UVW-1400P(EK):#10471
D707	1SS303→N.M.	UVW-1200(J) :#10201 UVW-1200(UC) :#10721
TP708	M.T→N.M.	UVW-1200P(EK):#10571

*	NT	PAL
C716	33P	22P

*	NT	PAL
R834, 837, 873	0	N.M.
R835, 841, 872	N.M.	0
D707	1SS303	N.M.
TP708	M.T.	N.M.

*	NT	PAL
X701	14.3M 1-527-722-21	17.73M 1-579-057-11
X702	14.3M 1-527-722-21	14.2M 1-579-058-11

*	NT	PAL
R793	N.M.	0
R813	10K	N.M.
R817	680	470
Q719	2SA1611	N.M.
Q720	DTC144EU	N.M.
TP707	M.T.	N.M.

*	NT	PAL
R642, 847	N.M.	0
R703, 704	N.M.	47K
R705, 706	0	N.M.
IC720	N.M.	SN74HC74ANS
C766	N.M.	0.022

*	NT	PAL
R820	4700	8200
R821	4700	10K
R822	4700	1200
R844	▼560	3300
R845	▼390	▼2K
R852	0	N.M.
R853	N.M.	0
R854	0	N.M.
R855	N.M.	0

*	NT	PAL
C751	15P	10P
C793	27P	22P
R819	▲10K	▲8200
R827	▲1100	▲1500
R863	N.M.	0
R864	0	N.M.
R675	▲6800	▲9100
R678	3.3M	1.5M

*	NT	PAL
L706	100UH	22UH
L707	33UH	15UH
C730	68P	82P
R729	▲560	▲360

▲ = :RN-C

16-62 (a)

TBC-28/28P (2/4)

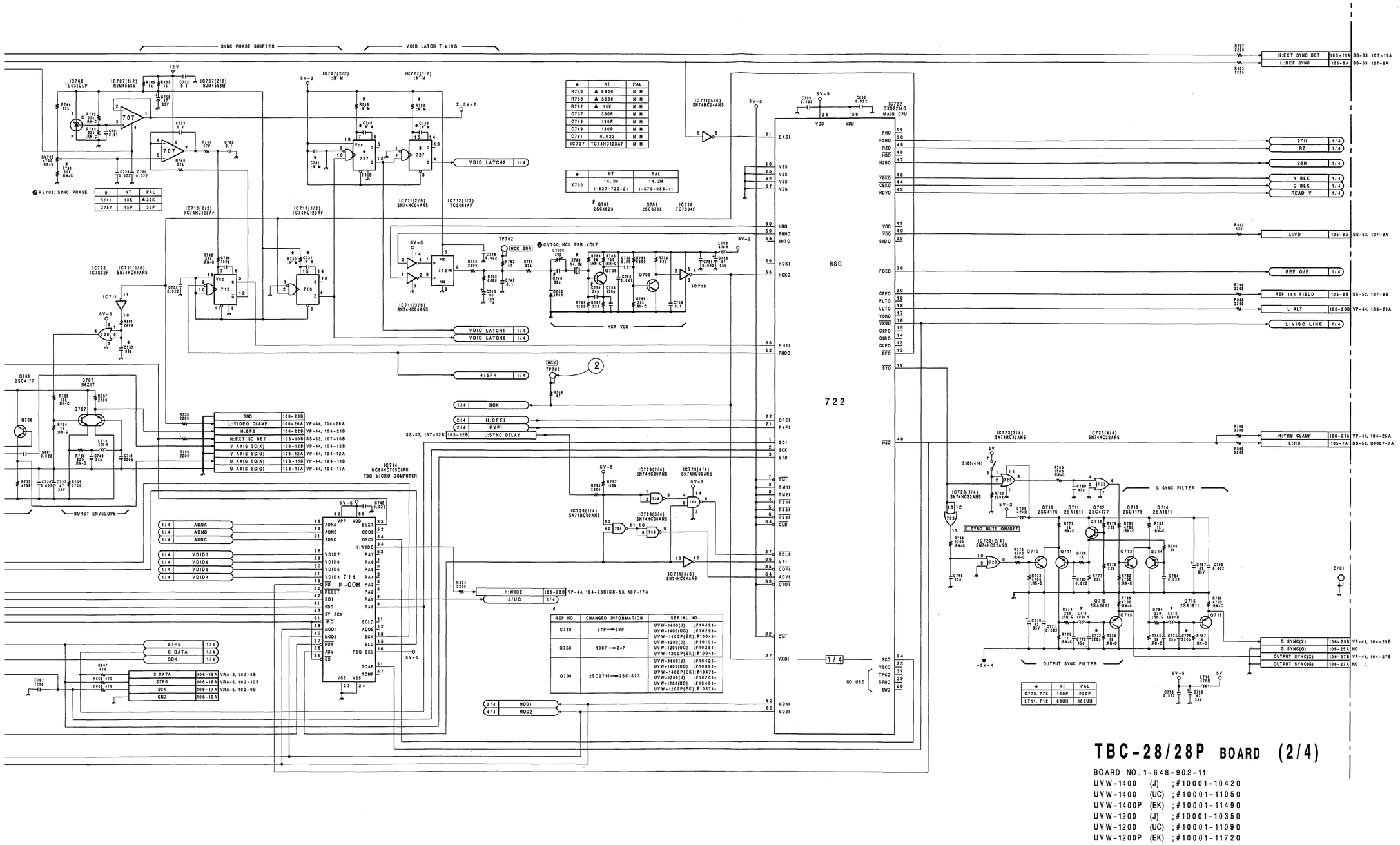
SYNC PHASE SHIFTER
VDID LATCH TIMING
722
RSG
IC708 TL431CLP
IC707(1/2) NJM4558M
IC707(2/2) NJM4558M
IC727(2/2) :N' M
IC727(1/2) :N' M
IC710(2/2) TC74HC123AF
IC710(1/2) TC74HC123AF
IC711(5/6) SN74HC04ANS
IC711(3/6) SN74HC04ANS
IC711(1/6) SN74HC04ANS
IC728 TC7S32F
IC711(1/6) SN74HC04ANS
IC718 TC7S04F
IC722 C3D2214Q MAIN CPU
IC714 MC68HC705C8FU T&C MICRO COMPUTER
IC728(1/4) SN74HC08ANS
IC728(2/4) SN74HC08ANS
IC728(3/4) SN74HC08ANS
IC728(4/4) SN74HC08ANS
IC723(1/4) SN74HC32ANS
IC723(2/4) SN74HC32ANS
IC723(3/4) SN74HC32ANS
IC723(4/4) SN74HC32ANS
Q706 2SC4177
Q707 1MZ1T
Q708 2SC1623
Q709 2SC3735
Q710 2SC4176
Q711 2SA1611
Q712 2SC4177
Q713 2SC4178
Q714 2SA1611
Q715 2SA1611
Q716 2SA1611
BURST ENVELOPE
HCK VCO
OUTPUT SYNC FILTER
G SYNC FILTER
G SYNC MUTE ON/OFF
RV706; SYNC PHASE
CV706; HCK ERR. VOLT
TP702
HCK ERR
E701
L:HEXT SYNC DET 105-11A SS-53, 107-11A
L:REF SYNC 105-9A SS-53, 107-9A
2FH 1/4
RZ 1/4
2BH 1/4
Y BLK 1/4
C BLK 1/4
READ V 1/4
L:VD 105-9A SS-53, 107-9A
REF O/E 1/4
REF 1s1 FIELD 105-8B SS-53, 107-8B
L ALT 106-20B VP-44, 104-21A
L:VISC LINE 1/4
H:YRB CLAMP 106-21A VP-44, 104-25A
L:HD 105-7A SS-53, CN107-7A
G SYNC(X) 106-25B VP-44, 104-25B
G SYNC(G) 106-25A NC
OUTPUT SYNC(X) 106-27B VP-44, 104-27B
OUTPUT SYNC(G) 106-27A NC
GND 106-26B
L:VIDEO CLAMP 106-26A VP-44, 104-26A
H:BF2 106-22B VP-44, 104-21B
H:EXT SC DET 105-10B SS-53, 107-10B
V AXIS SC(X) 106-12B VP-44, 104-12B
V AXIS SC(G) 106-12A VP-44, 104-12A
U AXIS SC(X) 106-11B VP-44, 104-11B
U AXIS SC(G) 106-11A VP-44, 104-11A
S DATA 106-16A VRA-5, 102-8B
STRB 106-18A VRA-5, 102-10B
SCK 106-17A VRA-5, 102-9B
GND 106-19A
H:WIDE 106-28B VP-44, 104-26B/SS-53, 107-17A
J/UC 1/4
VDID LATCH2 1/4
VDID LATCH1 1/4
VDID LATCH0 1/4
4/5FH 1/4
HCK 1/4
H:CFE1 2/4
EXF1 2/4
L:SYNC DELAY SS-53, 107-12B 105-12B
MOD1 3/4
MOD2 4/4
ADNA 1/4
ADNB 1/4
ADNC 1/4
VDID7 1/4
VDID6 1/4
VDID5 1/4
VDID4 1/4
STRB 1/4
S DATA 1/4
SCK 1/4
EXSI 61
VSS 10
VSS 25
VSS 42
VSS 57
HRO 60
PHHO 59
INTO 54
HCKI 58
HCKO 55
PHII 53
PHOO 52
CFE1 22
EXF1 21
SDI 1
SCK 2
STB 3
TM1 7
TM11 8
TM21 9
TM2I 4
TS1I 5
TS2I 6
CLR 64
SDLI 37
VPI 36
COFI 35
ADVI 34
CIOI 33
CMI 32
VXOI 27
MD1I 62
MD2I 63
FHO 51
F2HO 50
RZO 49
HBO 48
H2BO 47
YBKO 45
CBKO 44
RDVO 43
VDO 41
VDO 40
SIDO 39
FOEO 38
CFPO 20
PLTO 19
LLTO 18
VBRO 17
VBSO 16
CIPO 15
CIBO 14
CLPO 13
BFO 12
STO 11
HSO 46
SCO 24
VSCO 23
TPCO 31
SFHO 29
SWO 28
NO USE
1/4
H-COM
MC68HC705C8FU
RESET
SDI
SDO
SY SCK
IRQ
MOD1
MOD2
RDY
ADV
SS
VPP
VDD
ADNA
ADNB
ADNC
OSC1
OSC2
H:WIDE
VDID7
VDID6
VDID5
VDID4
PA7
PA6
PA5
PA4
PA3
PA2
PA1
PA0
SCLD
ADDE
SCK
SLD
RSG SEL
TCAP
TCMP
VSS
BEXT
R707 470
R805 470
R806 470
C787 220
R804 2200
R737 4700
R738 2200
R739 10k :RN-C
R744 22k
R743 22k :RN-C
R742 22k :RN-C
R741 33k :RN-C
R740 22k :RN-C
R746 22k :RN-C
R747 470
R748 22k
R749 :N' M
R792 :N' M
R750 :N' M
R752 :N' M
R737 330P
R746 130P
R749 130P
C791 0.022
R736 :N' M
R751 :N' M
R753 6800
R754 47
R755 2200
R756 2200
R758 2200
R762 47
R761 33k
R763 :N' M
R764 22k :RN-C
R765 22k :RN-C
R766 22k :RN-C
R767 330
R768 1200
R769 :RN-C
R770 680
R771 :RN-C
R772 470 :RN-C
R773 :RN-C
R774 :RN-C
R775 :RN-C
R776 1k
R777 22k
R778 680
R779 22k
R780 :RN-C
R781 :RN-C
R782 :RN-C
R783 :RN-C
R784 :RN-C
R785 :RN-C
R786 1k
R787 2200
R788 2200
R789 :RN-C
R790 :RN-C
R791 :RN-C
R793 1.5k :RN-C
R794 1.5k :RN-C
R795 :RN-C
R796 :RN-C
R797 2200
R798 2200
R799 :RN-C
R800 2200
R801 2200
R802 470
R803 2200
R805 2200
R806 2200
R807 470
R808 2200
C701 0.01
C702 0.022
C703 0.1
C704 0.022
C705 0.022
C706 0.022
C707 0.022
C708 0.022
C709 0.022
C710 0.022
C711 0.022
C712 0.022
C713 0.022
C714 0.022
C715 0.022
C716 0.022
C717 0.022
C718 0.022
C719 0.022
C720 0.022
C721 0.022
C722 0.022
C723 0.022
C724 0.022
C725 0.022
C726 0.022
C727 0.022
C728 0.022
C729 0.022
C730 0.022
C731 0.022
C732 0.022
C733 0.022
C734 0.022
C735 0.1
C736 0.022
C737 0.022
C738 0.022
C739 0.022
C740 0.022
C741 0.022
C742 0.022
C743 15
C744 0.022
C745 15p
C746 0.022
C747 0.1
C748 39p
C749 0.022
C750 0.022
C751 0.022
C752 0.022
C753 47
C754 0.022
C755 0.022
C756 0.022
C757 330
C758 0.047
C759 0.1
C760 0.022
C761 47
C762 0.022
C763 47
C764 0.022
C765 47
C766 0.022
C767 47
C768 0.022
C769 47
C770 47
C771 0.022
C772 2200
C773 15p
C774 15p
C775 0.022
C776 0.022
C777 0.022
C778 0.022
C779 0.022
C780 0.022
C781 0.022
C782 0.022
C783 0.022
C784 0.022
C785 0.022
C786 0.022
C787 0.022
C788 0.022
C789 0.022
C790 0.022
C791 0.022
C792 0.022
C793 0.022
C794 0.022

TBC-28/28P (2/4)

UVW-1400(J)	:Serial No. 10421 and higher
UVW-1400(UC)	:Serial No. 11051 and higher
UVW-1400P(EK)	:Serial No. 11491 and higher
UVW-1200(J)	:Serial No. 10351 and higher
UVW-1200(UC)	:Serial No. 11091 and higher
UVW-1200P(EK)	:Serial No. 11721 and higher

TBC-28/28P(2/4);SYNC/SC PROCESS, TBC MPU

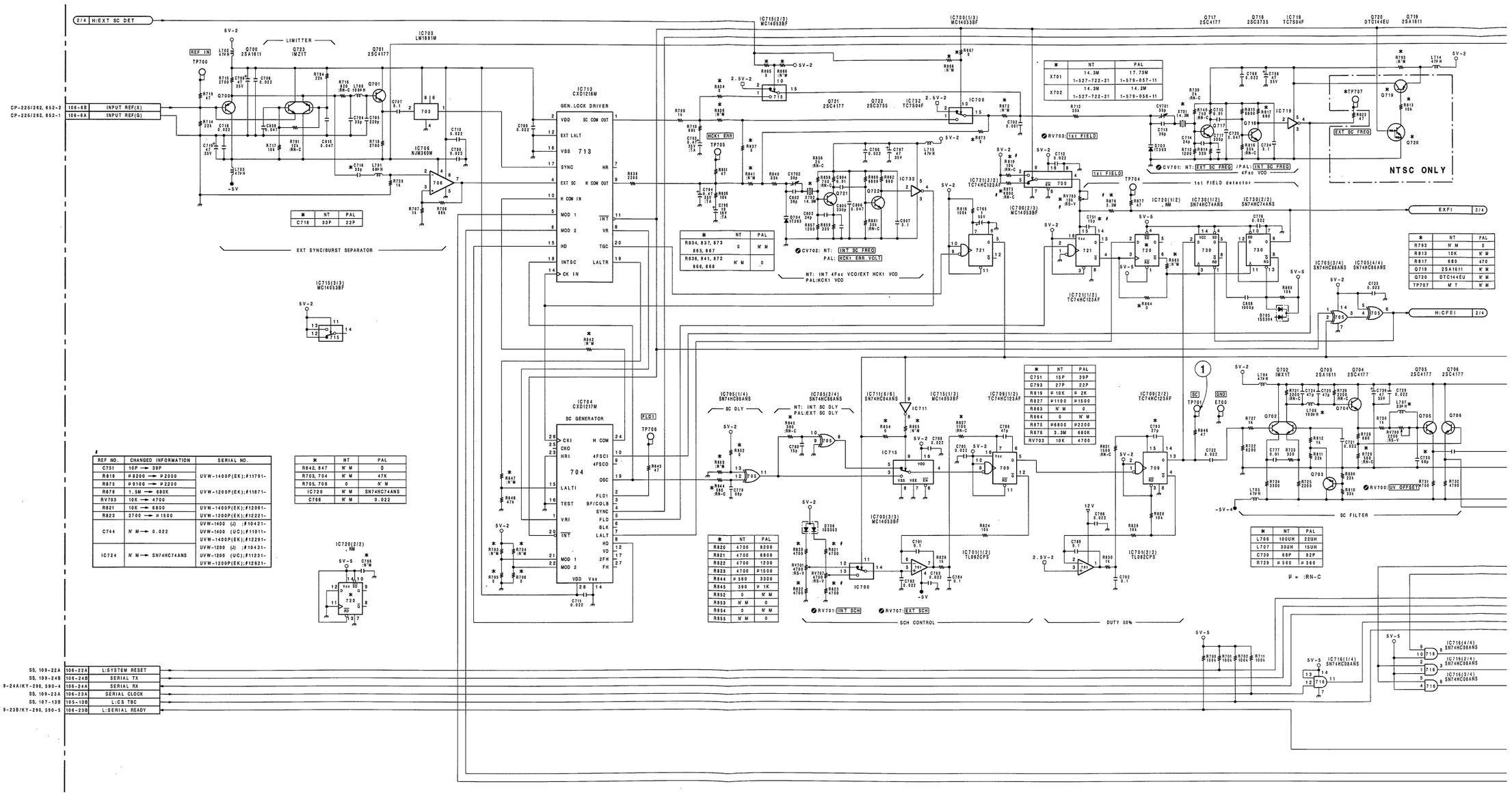

REF NO.	CHANGED INFORMATION	SERIAL NO.
C751	10P → 39P	
R819	Μ8200 → Μ2200	UVW-1400P(EK);#11791-
R875	Μ9100 → Μ2200	
R876	1.5M → 680K	UVW-1200P(EK);#11871-
RV703	10K → 4700	
R821	10K → 6800	UVW-1400P(EK);#12091-
R823	2700 → Μ1500	UVW-1200P(EK);#12221-
C744	N M→ 0.022	UVW-1400 (J) ;#10421- UVW-1400 (UC);#11011- UVW-1400P(EK);#12291-
IC724	N M→ SN74HC74ANS	UVW-1200 (J) ;#10431- UVW-1200 (UC);#11231- UVW-1200P(EK);#12921-

*	NT	PAL
C716	33P	22P

*	NT	PAL
R834, 837, 873	0	N M
865, 867		
R836, 841, 872	N M	0
866, 868		

*	NT	PAL
X701	14.3M	17.73M
	1-527-722-21	1-579-057-11
X702	14.3M	14.2M
	1-527-722-21	1-579-056-11

*	NT	PAL
R793	N M	0
R813	10K	N M
R817	680	470
Q719	2SA1611	N M
Q720	DTC144EU	N M
TP707	M T	N M

*	NT	PAL
R842, 847	N M	0
R703, 704	N M	47K
R705, 706	0	N M
IC720	N M	SN74HC74ANS
C766	N M	0.022

*	NT	PAL
C751	15P	39P
C793	27P	22P
R819	Μ10K	Μ 2K
R827	Μ1100	Μ1500
R863	N M	0
R864	0	N M
R875	Μ6800	Μ2200
R876	3.3M	680K
RV703	10K	4700

*	NT	PAL
L706	100UH	22UH
L707	33UH	15UH
C730	68P	82P
R729	Μ 560	Μ 360

Μ = :RN-C

	NT	PAL
R820	4700	8200
R821	4700	6800
R822	4700	1200
R823	4700	Μ1500
R844	Μ 560	3300
R845	390	Μ 1K
R852	0	N M
R853	N M	0
R854	0	N M
R855	N M	0

16-62 (b)

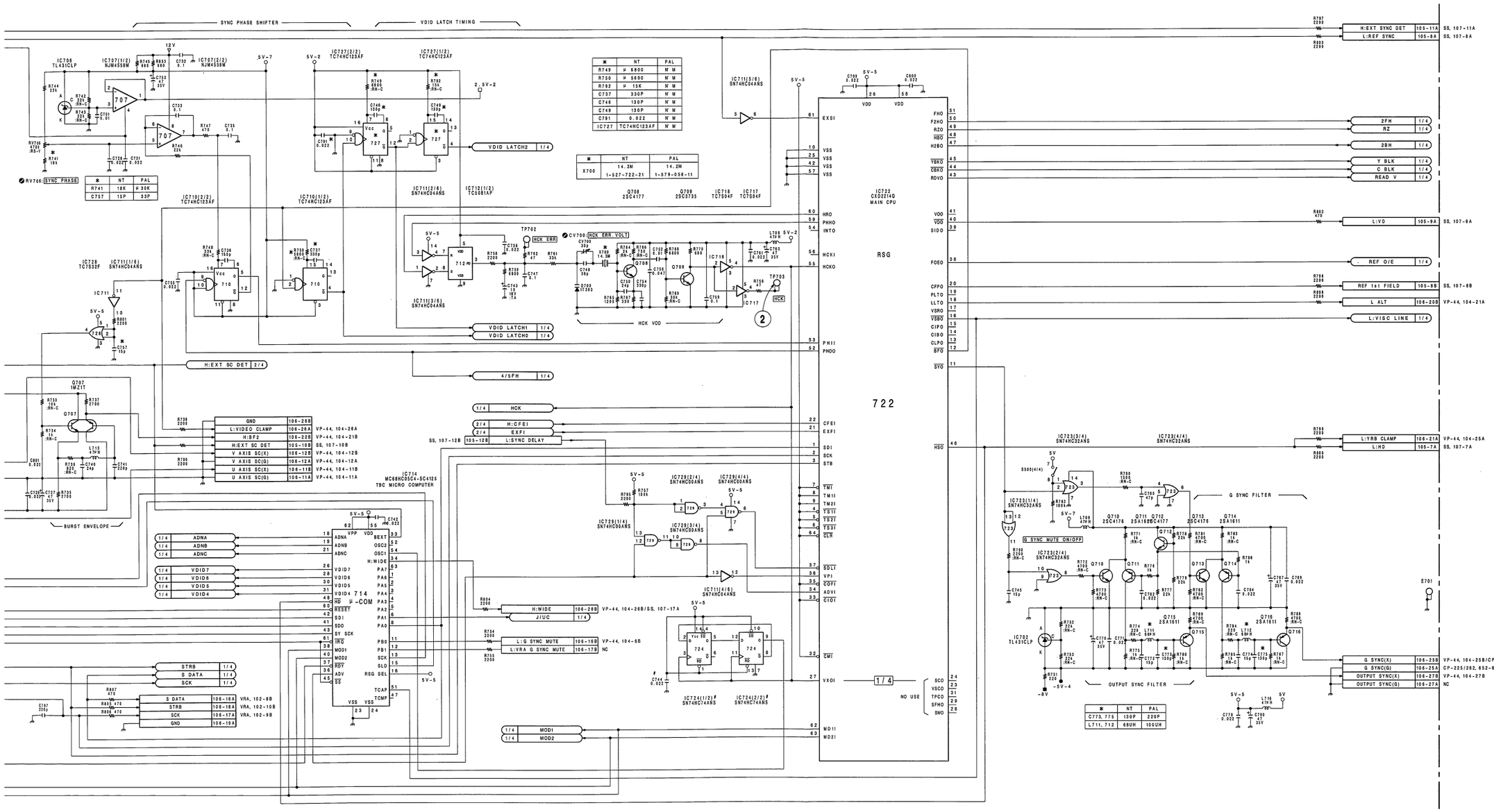

TBC-28/28P BOARD (2/4)

BOARD NO. 1-648-902-12, 13
UVW-1400 (J) ; #10421-
UVW-1400 (UC) ; #11051-
UVW-1400P (EK) ; #11491-
UVW-1200 (J) ; #10351-
UVW-1200 (UC) ; #11091-
UVW-1200P (EK) ; #11721-

TBC-28/28P (1-648-902-11,12,13)

CN1		E-1	IC405		R-4	✱Q200		R-3	TP500		E-1
CN2		C-6	IC406		M-5	✱Q201		R-3	TP501		E-1
CN105		N-6	IC407		N-4	✱Q202		P-3	TP502		D-1
CN106		C-6	IC408		M-4	✱Q203		P-3	TP503	N	H-1
			◎IC409		N-5	✱Q300		P-1	TP700		A-5
CV700		C-4	IC501		L-2	✱Q301		P-1	TP701		B-1
CV701		B-3	IC502		L-4	✱Q302		P-1	TP702		C-4
CV702		A-3	IC503		J-2	✱Q303		P-1	TP703		D-4
			IC504		J-4	✱Q304		N-2	TP704		C-1
✱D1		M-2	IC505		H-2	✱Q305		N-2	TP705		A-3
✱D2		M-3	IC506		H-3	✱Q306		R-2	TP706		C-3
✱D100		M-3	IC507		G-6	✱Q400		P-5	TP707	N	B-3
✱D101		N-3	IC508		H-4	✱Q401		P-5	△TP708	N	A-1
✱D102		R-3	IC509		G-3	✱Q402		R-5			
✱D200		M-3	IC510		F-6	✱Q403		P-5	X700		D-4
✱D301		N-2	IC511		H-1	✱Q404		M-4	X701		B-2
✱D302		R-2	IC512		F-3	✱Q405		R-4	X702		A-2
✱D303		R-2	IC513		F-4	✱Q406		R-5			
✱D304		R-2	IC514		H-1	✱Q407		N-4			
✱D305	P	P-2	IC516		F-1	✱Q501		F-1			
✱D401		P-4	IC518		F-3	✱Q502		E-1			
✱D402		N-4	IC519		E-2	✱Q503		D-1			
✱D403		M-4	IC520		D-2	✱Q700		A-5			
✱D404		M-4	IC522		G-2	✱Q701		A-5			
✱D502		K-2	IC523		F-4	Q702		B-1			
✱D503		K-2	IC524		E-3	✱Q703		C-2			
✱D505		G-1	IC525		E-3	✱Q704		B-2			
✱D506		M-5	IC526		D-3	✱Q705		B-2			
✱D700		C-4	IC527		D-3	✱Q706		C-2			
✱D703		B-2	IC528		H-3	Q707		B-4			
✱D704		A-2	IC529	N	F-2	✱Q708		D-5			
✱D705		C-2	IC530	N	G-2	✱Q709		C-5			
✱D706		A-1	IC531	N	G-2	✱Q710		B-5			
△✱D707	N	A-1	IC532	N	G-2	✱Q711		B-5			
			IC533	N	G-1	✱Q712		B-5			
E200		N-3	IC534	N	G-1	✱Q713		B-4			
E300		M-1	IC535	N	G-1	✱Q714		B-4			
E400		R-5	IC700		B-4	✱Q715		B-5			
E500		D-1	IC701		B-1	✱Q716		B-4			
E501		J-3	◎IC702		B-5	✱Q717		B-2			
E700		B-1	IC703		A-5	✱Q718		B-2			
E701		C-5	IC704		B-4	✱Q719	N	B-2			
			IC705		C-4	✱Q720	N	A-2			
FL500		F-2	IC706		A-5	✱Q721		A-2			
FL501		E-1	IC707		C-3	✱Q722		A-2			
FL502		D-1	IC708		C-4	◎Q723		A-5			
			IC709		A-1						
IC1		M-2	IC710		D-2	RV100		R-3			
IC2		M-3	IC711		D-3	RV200		R-3			
IC3		L-1	IC712		C-4	RV300		M-1			
IC4		L-4	IC713		A-4	RV301		N-1			
IC5		E-6	IC714		F-5	RV400		P-1			
IC6		L-1	IC715		A-1	RV401		P-5			
IC7		L-5	IC716		B-5	RV500		F-1			
IC8	P	B-5	◎IC717		C-5	RV501		F-1			
IC100		P-3	IC718		D-5	RV502		D-1			
IC101		P-3	IC719		B-3	RV700		B-1			
IC102		M-3	IC720	P	C-2	RV701		A-1			
IC103		M-2	IC721		C-2	RV703		B-1			
IC200		P-3	IC722		E-5	RV706		C-1			
IC203		M-3	IC723		B-5	RV707		B-1			
IC300		P-1	◎IC724		B-6						
IC301		P-2	IC727	N	D-2	S500		J-1			
IC302		R-1	IC728		C-4						
IC303		M-1	IC729		D-4	TH400		R-5			
IC304		M-2	IC730		C-3						
IC305		N-2	IC732		A-3	TP100		R-3			
IC306		M-2				TP101		N-3			
IC307		R-2	LV300		R-2	TP200		R-3			
IC308		R-2	LV400		M-4	TP201		N-3			
IC309	P	R-2				TP300		R-1			
IC400		R-5	✱Q100		R-3	TP301		P-2			
IC401		N-5	✱Q101		R-3	TP303		P-2			
IC402		R-5	✱Q102		P-3	TP400		M-5			
IC403		R-5	✱Q103		P-3	TP401		N-4			
IC404		R-4	✱Q104		R-3	TP402		N-4			

✱ : B SIDE
N : UVW-1400/1200 ONLY
P : UVW-1400P/1200P ONLY
△ : 1-648-902-11 ONLY
◎ : 1-648-902-12,13 ONLY

For J,UC

① TP303 PB

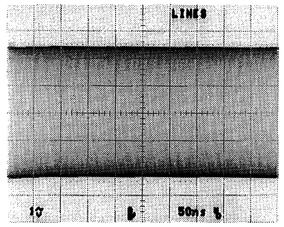

For EK

① TP303 PB

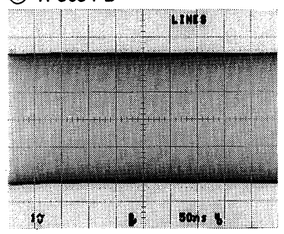

TBC-28/28P (3/4)

UVW-1400(J)	:Serial No.	10001	through	10420
UVW-1400(UC)	:Serial No.	10001	through	11050
UVW-1400P(EK)	:Serial No.	10001	through	11490
UVW-1200(J)	:Serial No.	10001	through	10350
UVW-1200(UC)	:Serial No.	10001	through	11090
UVW-1200P(EK)	:Serial No.	10001	through	11720

TBC-28/28P(3/4);Y WRITE CLOCK

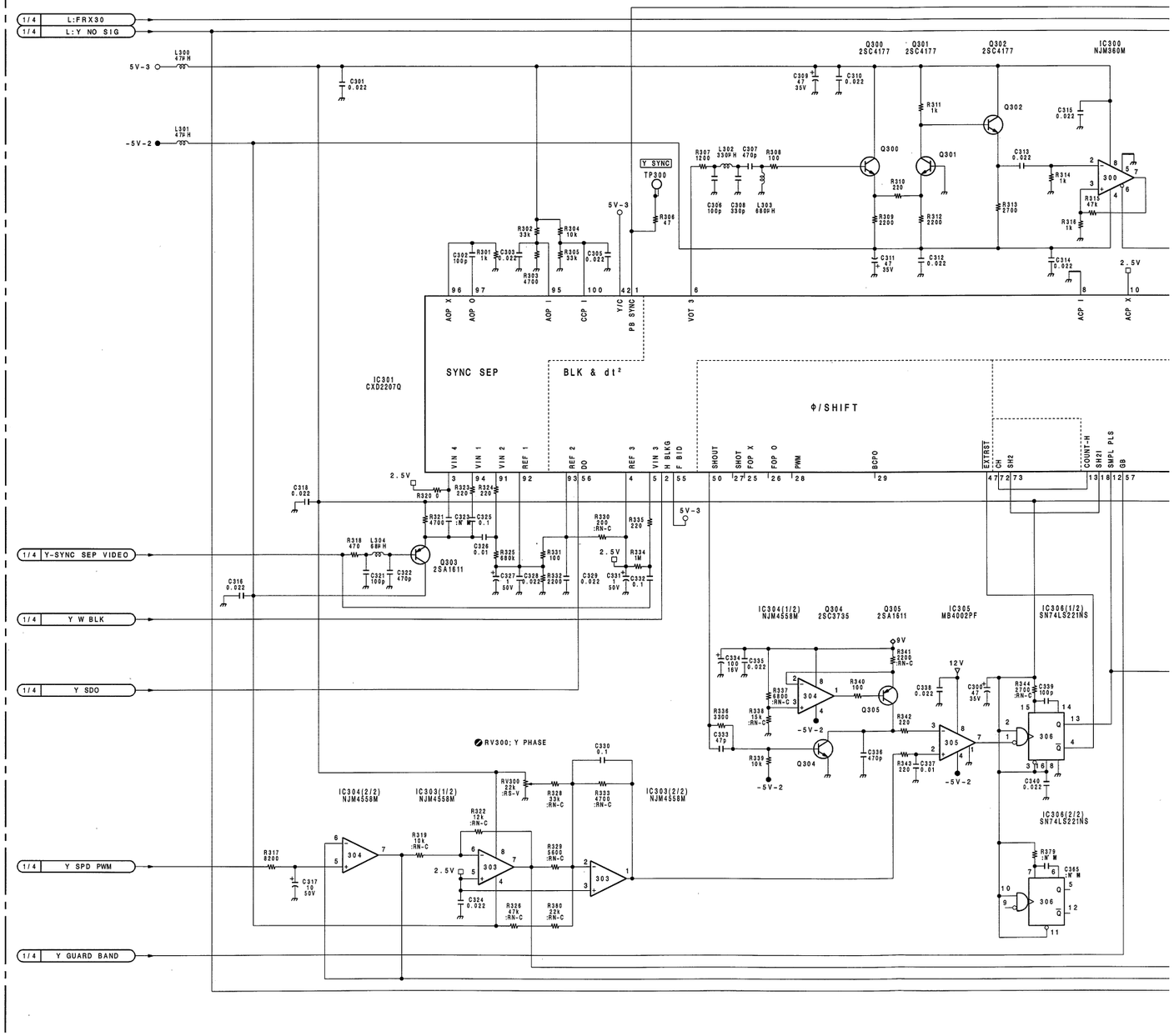

16-66 (a)

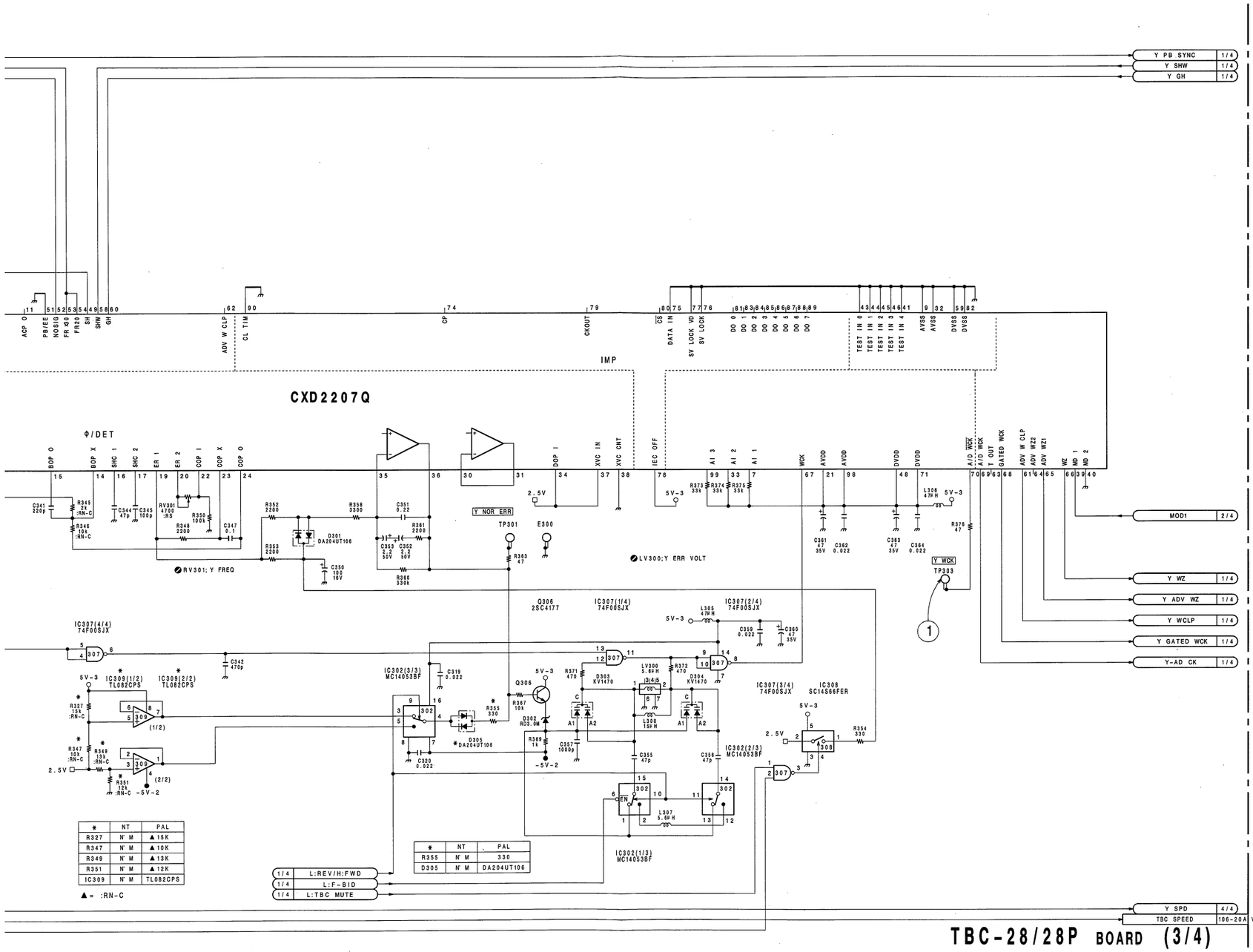

*	NT	PAL
R327	N M	▲15K
R347	N M	▲10K
R349	N M	▲13K
R351	N M	▲12K
IC309	N M	TL082CPS

▲ = :RN-C

*	NT	PAL
R355	N M	330
D305	N M	DA204UT106

TBC-28/28P BOARD (3/4)

BOARD NO.1-648-902-11
UVW-1400 (J) ;#10001-10420
UVW-1400 (UC) ;#10001-11050
UVW-1400P (EK) ;#10001-11490
UVW-1200 (J) ;#10001-10350
UVW-1200 (UC) ;#10001-11090
UVW-1200P (EK) ;#10001-11720

TBC-28/28P (3/4)

UVW-1400(J)	:Serial No. 10421 and higher
UVW-1400(UC)	:Serial No. 11051 and higher
UVW-1400P(EK)	:Serial No. 11491 and higher
UVW-1200(J)	:Serial No. 10351 and higher
UVW-1200(UC)	:Serial No. 11091 and higher
UVW-1200P(EK)	:Serial No. 11721 and higher

TBC-28/28P(3/4);Y WRITE CLOCK

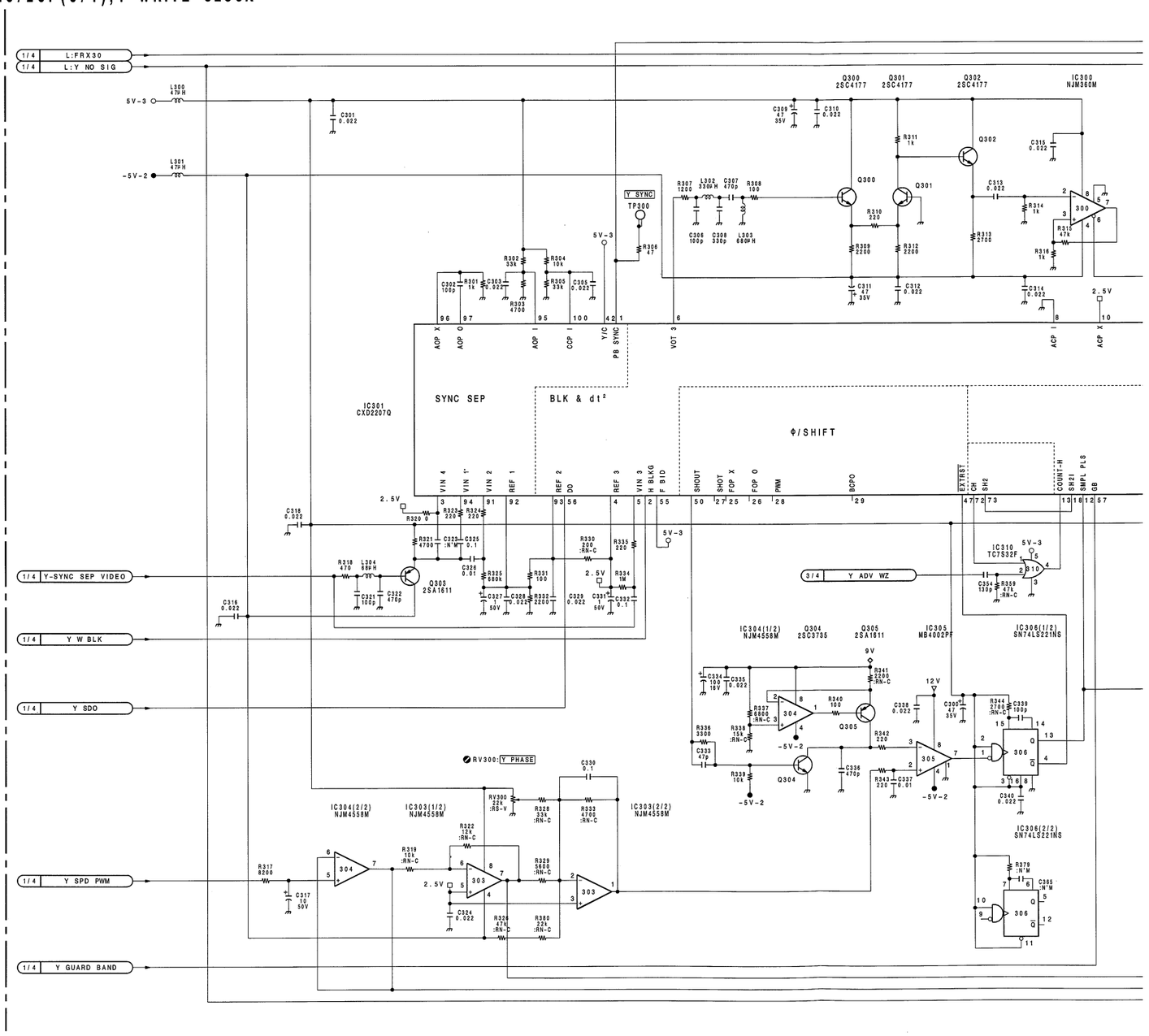

16-66 (b)

TBC-28/28P (3/4)

REF NO.	CHANGED INFORMATION	SERIAL NO.
C345	68P → 47P	UVW-1400 (J) ;#10421- UVW-1400 (UC);#11101- UVW-1400P(EK);#11791- UVW-1200 (J) ;#10401- UVW-1200 (UC);#11231- UVW-1200P(EK);#12071-

CXD2207Q

IMP

*	NT	PAL
R327	N·M	Φ15K
R347	N·M	Φ10K
R349	N·M	Φ13K
R351	N·M	Φ12K
IC309	N·M	TL082CPS

Φ= :RN-C

*	NT	PAL
R355	N·M	330
D305	N·M	DA204UT106

TBC-28/28P BOARD (3/4)

BOARD NO.1-648-902-12, 13
UVW-1400 (J) ;#10421-
UVW-1400 (UC) ;#11051-
UVW-1400P (EK) ;#11491-
UVW-1200 (J) ;#10351-
UVW-1200 (UC) ;#11091-
UVW-1200P (EK) ;#11721-

TBC-28/28P (1-648-902-11,12,13)

CN1		E-1	IC405		R-4	✱Q200		R-3	TP500		E-1
CN2		C-6	IC406		M-5	✱Q201		R-3	TP501		E-1
CN105		N-6	IC407		N-4	✱Q202		P-3	TP502		D-1
CN106		C-6	IC408		M-4	✱Q203		P-3	TP503	N	H-1
			◎ IC409		N-5	✱Q300		P-1	TP700		A-5
CV700		C-4	IC501		L-2	✱Q301		P-1	TP701		B-1
CV701		B-3	IC502		L-4	✱Q302		P-1	TP702		C-4
CV702		A-3	IC503		J-2	✱Q303		P-1	TP703		D-4
			IC504		J-4	✱Q304		N-2	TP704		C-1
✱D1		M-2	IC505		H-2	✱Q305		N-2	TP705		A-3
✱D2		M-3	IC506		H-3	✱Q306		R-2	TP706		C-3
✱D100		M-3	IC507		G-6	✱Q400		P-5	TP707	N	B-3
✱D101		N-3	IC508		H-4	✱Q401		P-5	△ TP708	N	A-1
✱D102		R-3	IC509		G-3	✱Q402		R-5			
✱D200		M-3	IC510		F-6	✱Q403		P-5	X700		D-4
✱D301		N-2	IC511		H-1	✱Q404		M-4	X701		B-2
✱D302		R-2	IC512		F-3	✱Q405		R-4	X702		A-2
✱D303		R-2	IC513		F-4	✱Q406		R-5			
✱D304		R-2	IC514		H-1	✱Q407		N-4			
✱D305	P	P-2	IC516		F-1	✱Q501		F-1			
✱D401		P-4	IC518		F-3	✱Q502		E-1			
✱D402		N-4	IC519		E-2	✱Q503		D-1			
✱D403		M-4	IC520		D-2	✱Q700		A-5			
✱D404		M-4	IC522		G-2	✱Q701		A-5			
✱D502		K-2	IC523		F-4	Q702		B-1			
✱D503		K-2	IC524		E-3	✱Q703		C-2			
✱D505		G-1	IC525		E-3	✱Q704		B-2			
✱D506		M-5	IC526		D-3	✱Q705		B-2			
✱D700		C-4	IC527		D-3	✱Q706		C-2			
✱D703		B-2	IC528		H-3	Q707		B-4			
✱D704		A-2	IC529	N	F-2	✱Q708		D-5			
✱D705		C-2	IC530	N	G-2	✱Q709		C-5			
✱D706		A-1	IC531	N	G-2	✱Q710		B-5			
△✱D707	N	A-1	IC532	N	G-2	✱Q711		B-5			
			IC533	N	G-1	✱Q712		B-5			
E200		N-3	IC534	N	G-1	✱Q713		B-4			
E300		M-1	IC535	N	G-1	✱Q714		B-4			
E400		R-5	IC700		B-4	✱Q715		B-5			
E500		D-1	IC701		B-1	✱Q716		B-4			
E501		J-3	◎ IC702		B-5	✱Q717		B-2			
E700		B-1	IC703		A-5	✱Q718		B-2			
E701		C-5	IC704		B-4	✱Q719	N	B-2			
			IC705		C-4	✱Q720	N	A-2			
FL500		F-2	IC706		A-5	✱Q721		A-2			
FL501		E-1	IC707		C-3	✱Q722		A-2			
FL502		D-1	IC708		C-4	◎ Q723		A-5			
			IC709		A-1						
IC1		M-2	IC710		D-2	RV100		R-3			
IC2		M-3	IC711		D-3	RV200		R-3			
IC3		L-1	IC712		C-4	RV300		M-1			
IC4		L-4	IC713		A-4	RV301		N-1			
IC5		E-6	IC714		F-5	RV400		P-1			
IC6		L-1	IC715		A-1	RV401		P-5			
IC7		L-5	IC716		B-5	RV500		F-1			
IC8	P	B-5	◎ IC717		C-5	RV501		F-1			
IC100		P-3	IC718		D-5	RV502		D-1			
IC101		P-3	IC719		B-3	RV700		B-1			
IC102		M-3	IC720	P	C-2	RV701		A-1			
IC103		M-2	IC721		C-2	RV703		B-1			
IC200		P-3	IC722		E-5	RV706		C-1			
IC203		M-3	IC723		B-5	RV707		B-1			
IC300		P-1	◎ IC724		B-6						
IC301		P-2	IC727	N	D-2	S500		J-1			
IC302		R-1	IC728		C-4						
IC303		M-1	IC729		D-4	TH400		R-5			
IC304		M-2	IC730		C-3						
IC305		N-2	IC732		A-3	TP100		R-3			
IC306		M-2				TP101		N-3			
IC307		R-2	LV300		R-2	TP200		R-3			
IC308		R-2	LV400		M-4	TP201		N-3			
IC309	P	R-2				TP300		R-1			
IC400		R-5	✱Q100		R-3	TP301		P-2			
IC401		N-5	✱Q101		R-3	TP303		P-2			
IC402		R-5	✱Q102		P-3	TP400		M-5			
IC403		R-5	✱Q103		P-3	TP401		N-4			
IC404		R-4	✱Q104		R-3	TP402		N-4			

✱ : B SIDE
N : UVW-1400/1200 ONLY
P : UVW-1400P/1200P ONLY
△ : 1-648-902-11 ONLY
◎ : 1-648-902-12,13 ONLY

For J,UC

① TP402 PB

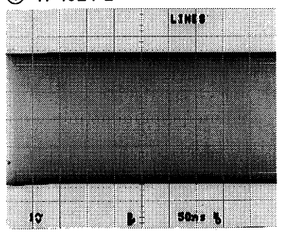

For EK

① TP402 PB

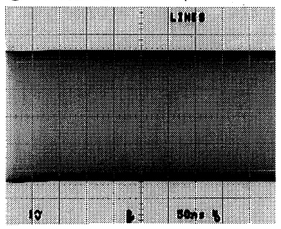

TBC-28/28P (4/4)

UVW-1400(J)	:Serial No.	10001 through 10420
UVW-1400(UC)	:Serial No.	10001 through 11050
UVW-1400P(EK)	:Serial No.	10001 through 11490
UVW-1200(J)	:Serial No.	10001 through 10350
UVW-1200(UC)	:Serial No.	10001 through 11090
UVW-1200P(EK)	:Serial No.	10001 through 11720

TBC-28/28P(4/4);C WRITE CLOCK

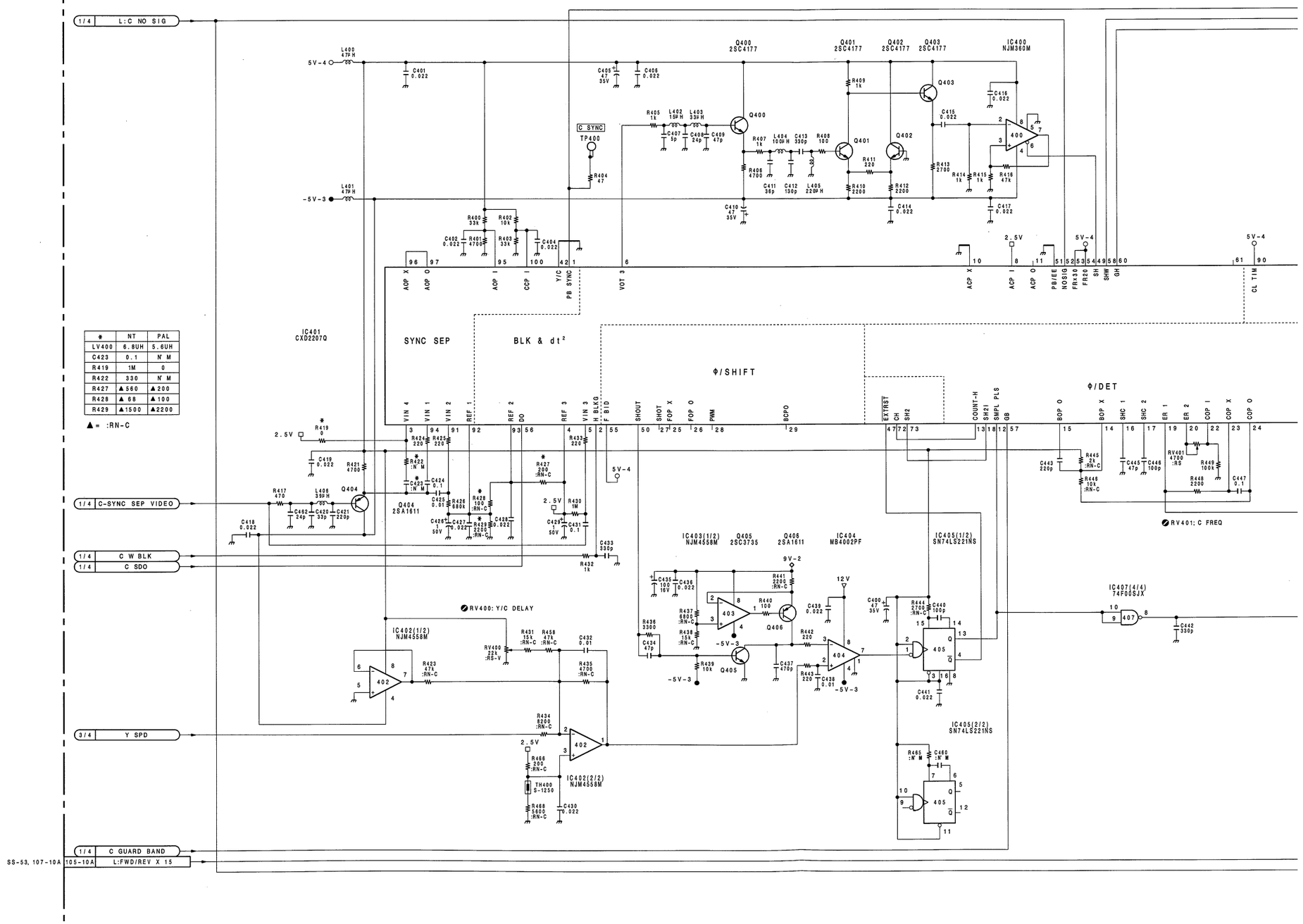

*	NT	PAL
LV400	6.8UH	5.6UH
C423	0.1	N M
R419	1M	0
R422	330	N M
R427	▲560	▲200
R428	▲ 68	▲100
R429	▲1500	▲2200

▲ = :RN-C

TBC-28/28P (4/4)

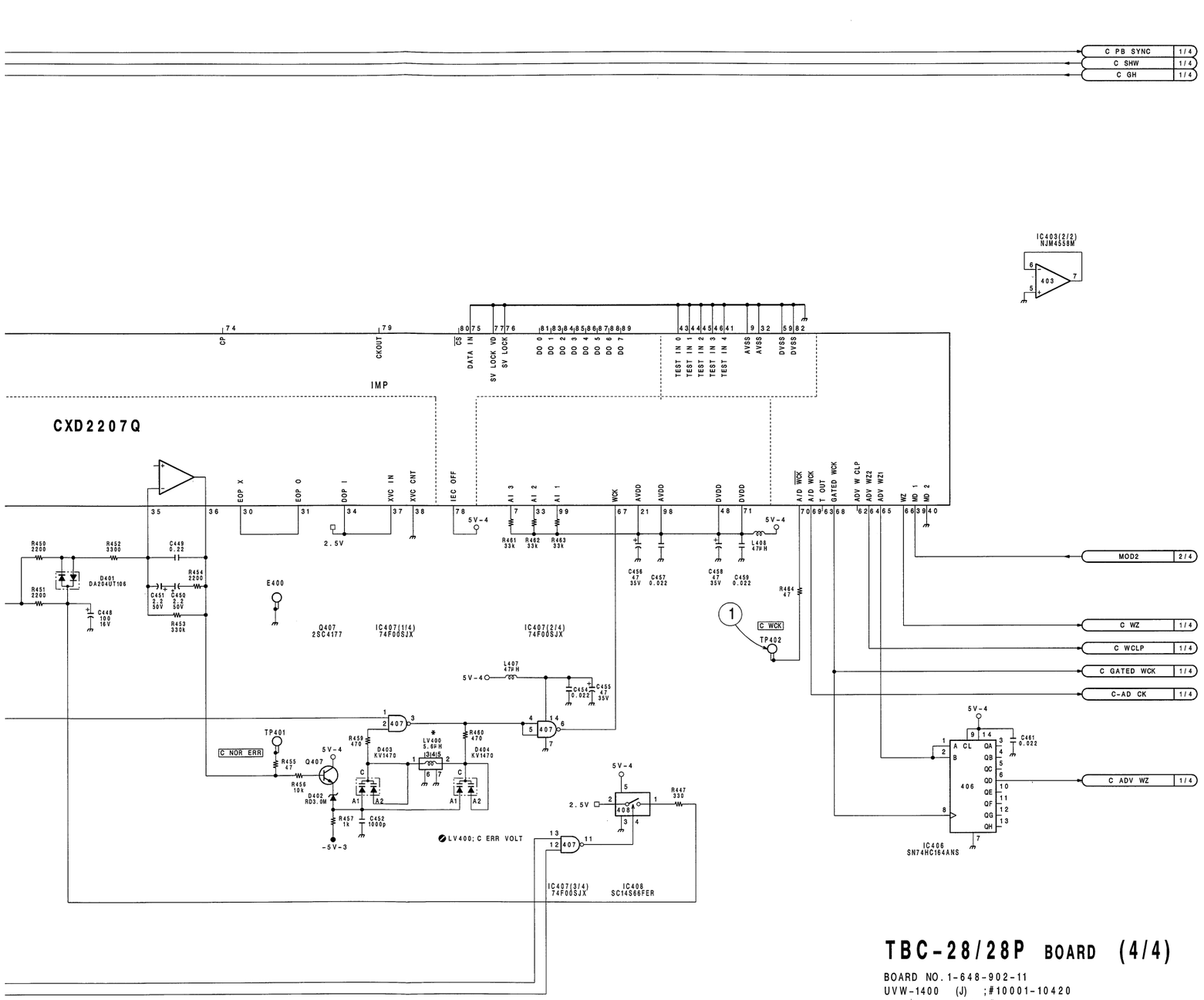

TBC-28/28P BOARD (4/4)

BOARD NO. 1-648-902-11
UVW-1400 (J) ;#10001-10420
UVW-1400 (UC) ;#10001-11050
UVW-1400P (EK) ;#10001-11490
UVW-1200 (J) ;#10001-10350
UVW-1200 (UC) ;#10001-11090
UVW-1200P (EK) ;#10001-11720

TBC-28/28P (4/4)

UVW-1400(J)	:Serial No. 10421 and higher
UVW-1400(UC)	:Serial No. 11051 and higher
UVW-1400P(EK)	:Serial No. 11491 and higher
UVW-1200(J)	:Serial No. 10351 and higher
UVW-1200(UC)	:Serial No. 11091 and higher
UVW-1200P(EK)	:Serial No. 11721 and higher

TBC-28/28P(4/4);C WRITE CLOCK

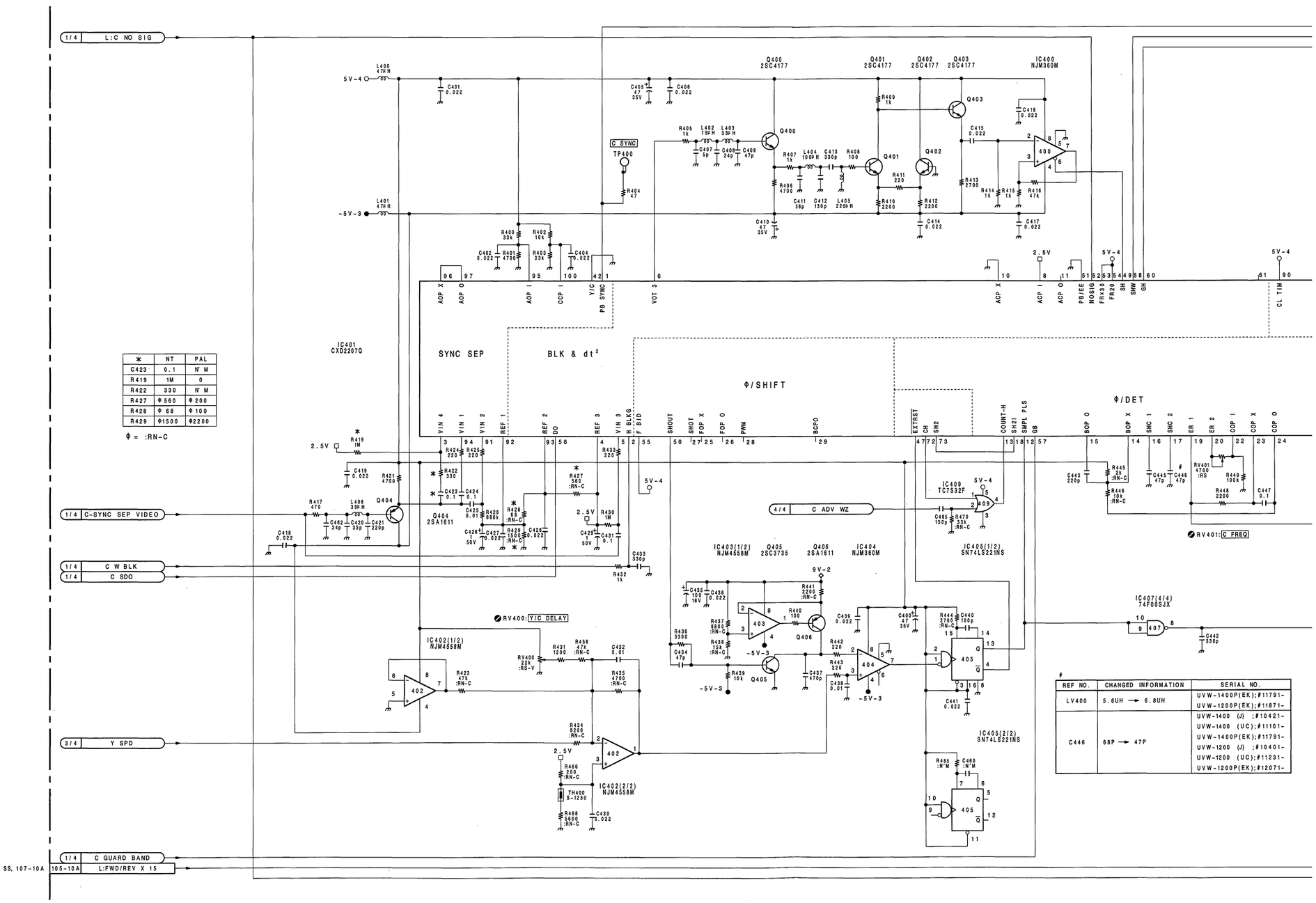

*	NT	PAL
C423	0.1	N M
R419	1M	0
R422	330	N M
R427	Φ560	Φ200
R428	Φ 68	Φ100
R429	Φ1500	Φ2200

Φ = :RN-C

#	REF NO.	CHANGED INFORMATION	SERIAL NO.
	LV400	5.6UH → 6.8UH	UVW-1400P(EK);#11791- UVW-1200P(EK);#11871-
	C446	68P → 47P	UVW-1400 (J) ;#10421- UVW-1400 (UC);#11101- UVW-1400P(EK);#11791- UVW-1200 (J) ;#10401- UVW-1200 (UC);#11231- UVW-1200P(EK);#12071-

 TBC-28/28P (4/4)

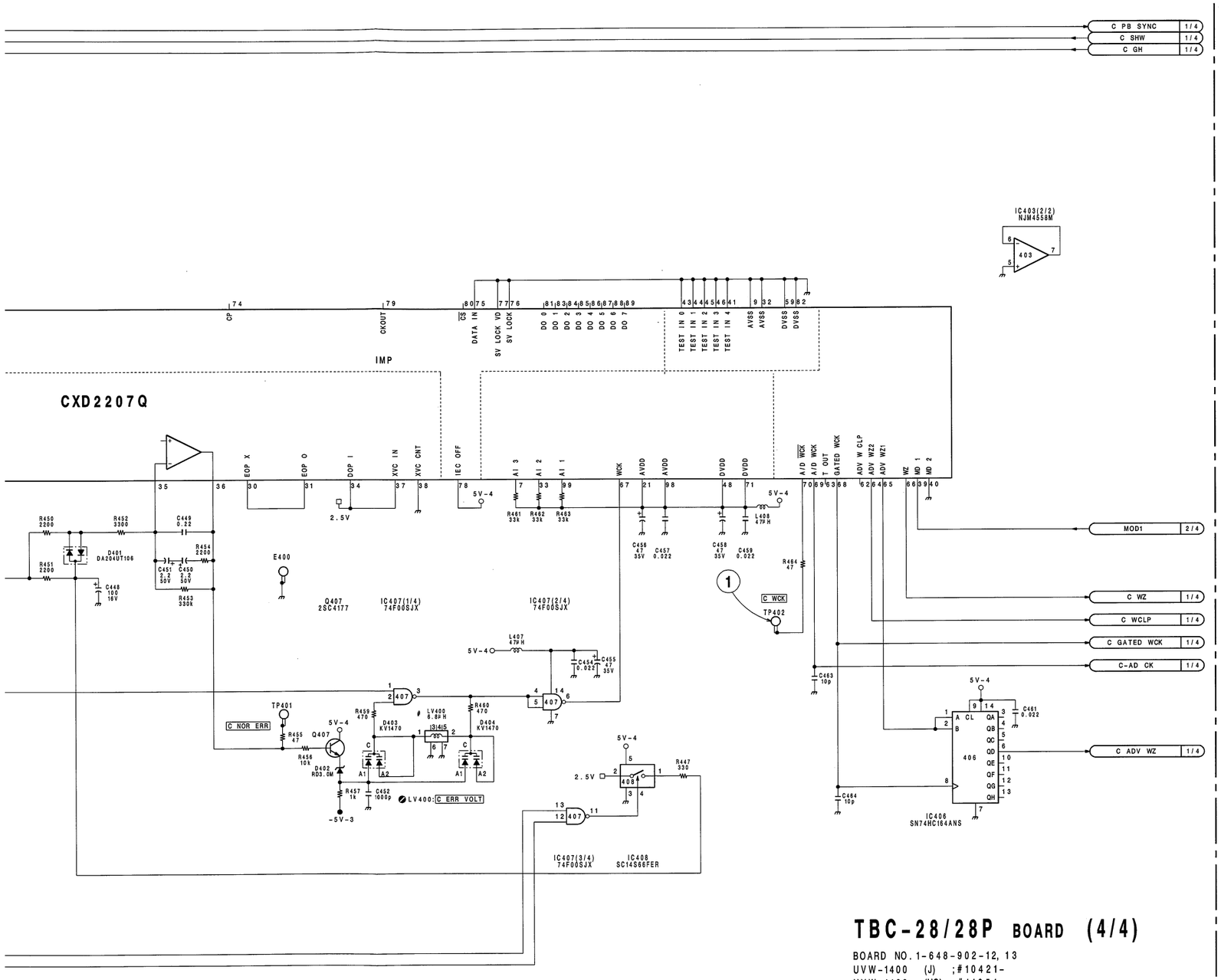

TBC-28/28P BOARD (4/4)

BOARD NO. 1-648-902-12, 13
UVW-1400 (J) ;#10421-
UVW-1400 (UC) ;#11051-
UVW-1400P (EK) ;#11491-
UVW-1200 (J) ;#10351-
UVW-1200 (UC) ;#11091-
UVW-1200P (EK) ;#11721-

 16-71 (b)

VP-44/44A/44P/44AP (1/7)

VP-44/44A/44P/44AP (1-648-900-11,12,13)

CN103	N-6	IC705	R-4	✱Q510	B-4	RV503	C-3
◎ CN104	C-6	IC706	E-2	Q511	C-2	RV504	B-4
CN105	R-5	IC707	E-1	✱Q512	C-2	RV505	C-3
△ CN601	C-6	IC708	F-5	✱Q513	B-5	RV506	B-5
				✱Q514	C-2	RV507	C-3
DL101	N-4	◎ Q51	B-5	Q515	C-4	RV508	C-5
DL301	J-4	✱Q101	N-5	✱Q516	B-2	RV509	B-4
		✱Q102	N-4	✱Q517	C-5	RV510	A-4
✱D201	N-2	✱Q103	N-5	✱Q518	C-4	RV511	C-4
✱D401	J-2	✱Q104	N-4	✱Q519	B-2	RV512	A-4
✱D501	A-2	✱Q105	N-4	✱Q520	B-2	RV601 P	E-1
✱D502	B-2	✱Q106	N-3	Q521	B-4	RV602	D-1
✱D503	B-3	✱Q107	N-3	Q522	B-3	RV603	E-1
✱D504	A-4	✱Q108	N-4	Q523	C-4	RV604	E-1
✱D601	D-2	✱Q109	N-4	✱Q601	D-5	RV605	D-1
✱D701	R-4	✱Q110	P-4	✱Q602	E-5	RV606	D-1
		✱Q111	P-5	Q603	D-5	RV607	C-1
E101	P-6	✱Q112	P-5	Q604	E-5	RV701	F-1
E102	N-1	✱Q201	M-2	Q605	D-5	RV702	G-1
E201	R-1	✱Q202	N-1	Q606	E-5	RV703	F-1
E301	K-5	✱Q203	P-2	Q607	D-4	RV704	G-1
E401	G-2	✱Q204	N-2	Q608	E-4	RV705	F-3
E501	B-3	✱Q205	P-2	Q609	D-4	RV706	F-3
E502	B-6	✱Q206	P-2	Q610	E-4	RV707	F-3
E601	D-4	✱Q207	N-2	Q611	D-4	RV708	G-3
E602	D-2	✱Q208	N-1	Q612	E-4	RV709	F-2
		✱Q209	N-1	✱Q613	F-5	RV710	F-2
FL201	M-1	✱Q210	N-1	✱Q614 P	F-5		
FL401	H-1	✱Q211	P-2	✱Q615	F-5	TH201	P-2
FL601	E-1	✱Q212	P-1	✱Q616	D-2	TH401	J-2
		✱Q213	R-2	✱Q617	D-2	✱TH601 P	D-1
IC101	P-4	✱Q214	R-2	✱Q618	D-3		
IC102	M-5	✱Q215	P-1	✱Q619	E-3	TP101	L-2
IC103	N-5	✱Q216	N-2	✱Q620	F-5	TP102	P-1
IC104	L-5	✱Q217	M-2	✱Q621	F-5	TP103	L-1
IC202	M-2	✱Q218	M-2	✱Q622	D-1	TP104	P-3
IC203	M-1	✱Q219	M-2	✱Q623	D-1	TP201	P-1
IC204	P-1	✱Q220	M-2	✱Q624	D-1	TP301	G-1
IC205	L-2	✱Q301	J-4	✱Q701	F-4	TP302	J-3
IC301	K-4	✱Q302	J-4	✱Q702	G-4	TP401	L-1
IC302	H-5	✱Q303	H-4	✱Q703	F-3	TP501	C-2
IC303	H-5	✱Q304	H-5	✱Q704	G-3		
IC401	H-2	✱Q305	H-4	✱Q705	F-3		
IC402	H-1	✱Q306	H-3	✱Q706	F-3		
IC403	K-1	✱Q307	J-3	✱Q707	F-3		
IC404	G-2	✱Q308	J-4	✱Q708	F-3		
IC501	B-2	✱Q309	J-4	✱Q709	F-3		
IC502	A-2	✱Q310	K-3	✱Q710	F-3		
IC504	B-2	✱Q311	K-5	✱Q711	G-3		
IC505	B-2	✱Q401	H-2	✱Q712	G-3		
IC506	A-3	✱Q402	J-1	✱Q713	F-3		
IC507	B-5	✱Q403	J-1	✱Q714	G-3		
IC508	B-4	✱Q404	J-2	✱Q715	F-3		
IC509	A-5	✱Q405	J-1	✱Q716	F-3		
IC510	A-4	✱Q406	J-1	✱Q717	F-2		
IC511	A-5	✱Q407	J-1	Q718	E-2		
IC512	J-6	✱Q408	J-1	Q719	F-2		
IC513	G-6	✱Q409	J-2	✱Q720	F-2		
IC514	A-2	✱Q410	J-1	✱Q721	F-2		
IC515 N	C-1	✱Q411	J-2	Q722	F-2		
IC516	C-1	✱Q412	J-2	Q723	G-2		
IC601	E-5	✱Q413	K-2	✱Q724	F-2		
IC602	D-4	✱Q414	K-2	✱Q725	F-2		
IC603	D-3	✱Q415	K-2	✱Q726	F-1		
IC604	D-3	✱Q416	J-2	✱Q727	F-1		
IC605	D-3	✱Q417	H-2				
IC606	E-3	✱Q418	H-2	RV101	L-1		
IC607	D-2	✱Q501	A-1	RV102	K-1		
IC608	E-2	Q502	A-1	RV103	P-4		
IC610	D-2	Q503	A-1	RV201	M-3		
IC612	D-2	Q504	A-1	RV301	J-1		
IC613	C-2	Q505	B-1	RV302	H-1		
IC701	F-1	Q506	B-1	RV303	K-4		
IC702	F-1	Q507	C-2	RV401	H-3		
IC703	R-3	✱Q508	B-4	RV501	B-4		
IC704	R-4	✱Q509	C-3	RV502	C-3		

✱ : B SIDE
__ : UVW-1400/1400P ONLY
N : UVW-1400/1200 ONLY
P : UVW-1400P/1200P ONLY
△ : 1-648-900-11 ONLY
◎ : 1-648-900-12,13 ONLY

VP-44/44A/44P/44AP(1/7);Y RF AGC/EQ, Y DO DET.

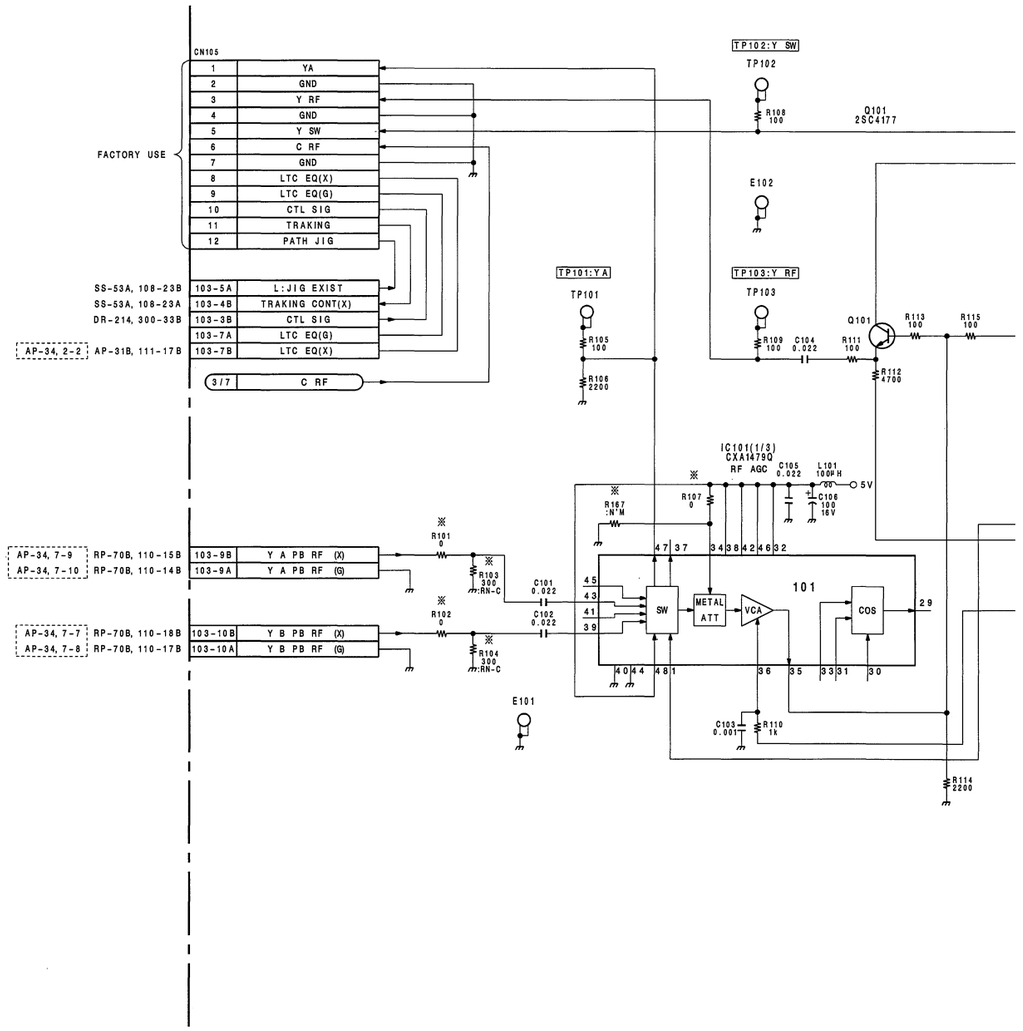

16-72

VP-44/44A/44P/44AP (1/7)

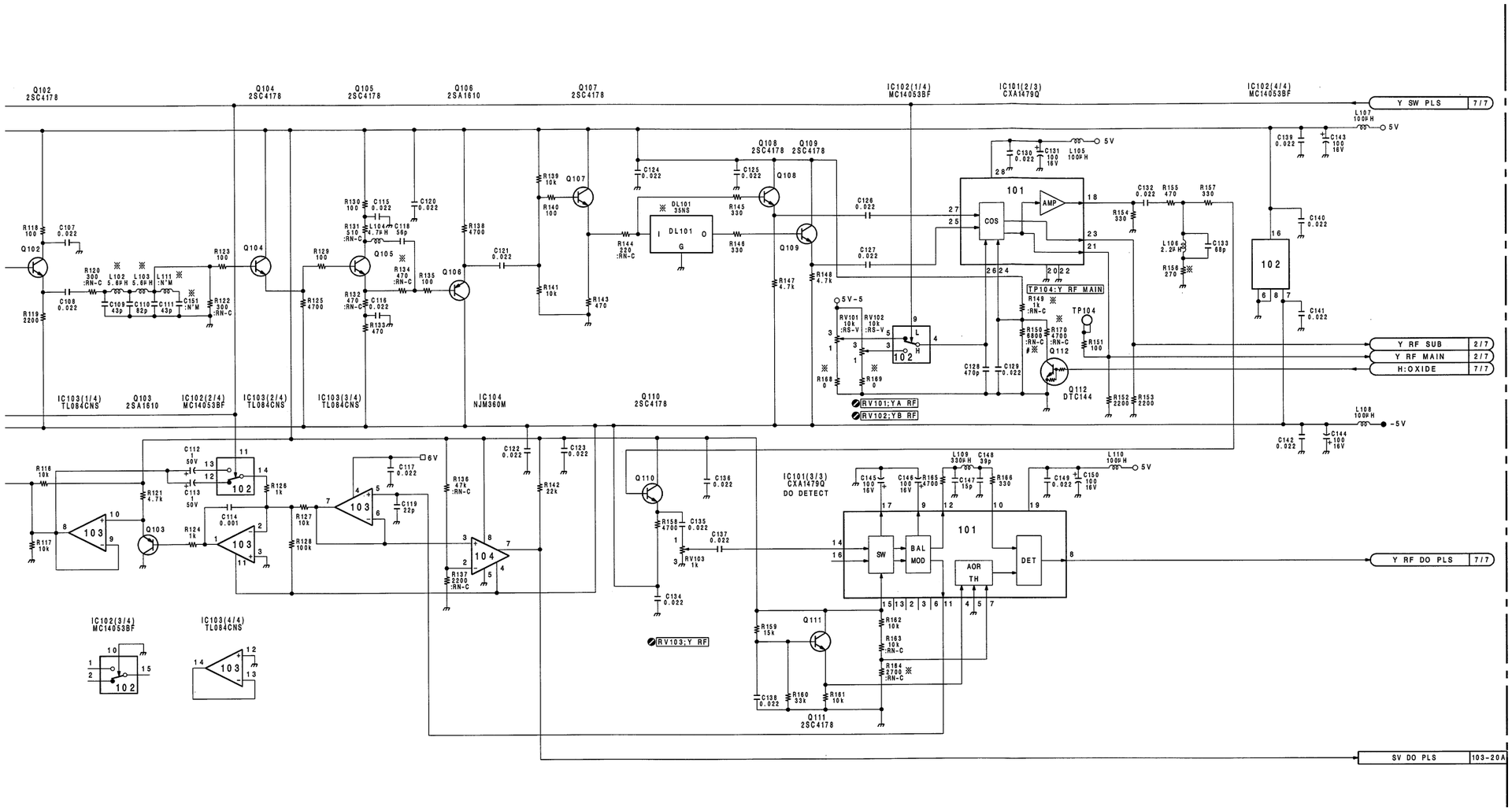

※

REF NO.	UVW-1400		UVW-1200	
	J, UC	EK	J, UC	EK
R101	0	0	※100	※82
R102	0	0	※100	※82
R103	※300	※300	※200	※220
R104	※300	※300	※200	※220
R150	※2200#	※6800	※4700	※5600
R170	※4700	10K	※3300	10K

REF NO.	J, UC	EK
R107	0	N M
R134	※470	※560
R149	※1000	※1500
R156	270	270
R164	※2700	※2200
R167	N M	0
L102	5.6UH	4.7UH
L103	5.6UH	4.7UH
L111	N M	4.7UH
C151	N M	12P

REF NO.	J, UC	EK
DL101	35ns 1-415-154-31	25ns 1-415-674-11
R168	0	10K
R169	0	10K

※ = :RN-C

#

REF NO.	CHANGED INFORMATION	SERIAL NO.
R150	※6800 → ※2200	UVW-1400 (J) ;#11141- UVW-1400 (UC);#10421-

NOTE;[ ] (CONNECTOR' S DESTINATION)
FOR UVW-1200/1200P

VP-44/44A
VP-44P/44AP BOARD (1/7)

BOARD NO. 1-648-900-11, 12, 13
UVW-1400 (J) ;#10001-
UVW-1400 (UC) ;#10001-
UVW-1400P (EK) ;#10001-
UVW-1200 (J) ;#10001-
UVW-1200 (UC) ;#10001-
UVW-1200P (EK) ;#10001-

VP-44/44A/44P/44AP (2/7)

VP-44/44A/44P/44AP (1-648-900-11,12,13)

CN103	N-6	IC705	R-4	✱Q510	B-4	RV503	C-3		
◎ CN104	C-6	IC706	E-2	Q511	C-2	RV504	B-4		
CN105	R-5	IC707	E-1	✱Q512	C-2	RV505	C-3		
△ CN601	C-6	IC708	F-5	✱Q513	B-5	RV506	B-5		
				✱Q514	C-2	RV507	C-3		
DL101	N-4	◎ Q51	B-5	Q515	C-4	RV508	C-5		
DL301	J-4	✱Q101	N-5	✱Q516	B-2	RV509	B-4		
		✱Q102	N-4	✱Q517	C-5	RV510	A-4		
✱D201	N-2	✱Q103	N-5	✱Q518	C-4	RV511	C-4		
✱D401	J-2	✱Q104	N-4	✱Q519	B-2	RV512	A-4		
✱D501	A-2	✱Q105	N-4	✱Q520	B-2	RV601	P E-1		
✱D502	B-2	✱Q106	N-3	Q521	B-4	RV602	D-1		
✱D503	B-3	✱Q107	N-3	Q522	B-3	RV603	E-1		
✱D504	A-4	✱Q108	N-4	Q523	C-4	RV604	E-1		
✱D601	D-2	✱Q109	N-4	✱Q601	D-5	RV605	D-1		
✱D701	R-4	✱Q110	P-4	✱Q602	E-5	RV606	D-1		
		✱Q111	P-5	Q603	D-5	RV607	C-1		
E101	P-6	✱Q112	P-5	Q604	E-5	RV701	F-1		
E102	N-1	✱Q201	M-2	Q605	D-5	RV702	G-1		
E201	R-1	✱Q202	N-1	Q606	E-5	RV703	F-1		
E301	K-5	✱Q203	P-2	Q607	D-4	RV704	G-1		
E401	G-2	✱Q204	N-2	Q608	E-4	RV705	F-3		
E501	B-3	✱Q205	P-2	Q609	D-4	RV706	F-3		
E502	B-6	✱Q206	P-2	Q610	E-4	RV707	F-3		
E601	D-4	✱Q207	N-2	Q611	D-4	RV708	G-3		
E602	D-2	✱Q208	N-1	Q612	E-4	RV709	F-2		
		✱Q209	N-1	✱Q613	F-5	RV710	F-2		
FL201	M-1	✱Q210	N-1	✱Q614	P F-5				
FL401	H-1	✱Q211	P-2	✱Q615	F-5	TH201	P-2		
FL601	E-1	✱Q212	P-1	✱Q616	D-2	TH401	J-2		
		✱Q213	R-2	✱Q617	D-2	✱TH601	P D-1		
IC101	P-4	✱Q214	R-2	✱Q618	D-3				
IC102	M-5	✱Q215	P-1	✱Q619	E-3	TP101	L-2		
IC103	N-5	✱Q216	N-2	✱Q620	F-5	TP102	P-1		
IC104	L-5	✱Q217	M-2	✱Q621	F-5	TP103	L-1		
IC202	M-2	✱Q218	M-2	✱Q622	D-1	TP104	P-3		
IC203	M-1	✱Q219	M-2	✱Q623	D-1	TP201	P-1		
IC204	P-1	✱Q220	M-2	✱Q624	D-1	TP301	G-1		
IC205	L-2	✱Q301	J-4	✱Q701	F-4	TP302	J-3		
IC301	K-4	✱Q302	J-4	✱Q702	G-4	TP401	L-1		
IC302	H-5	✱Q303	H-4	✱Q703	F-3	TP501	C-2		
IC303	H-5	✱Q304	H-5	✱Q704	G-3				
IC401	H-2	✱Q305	H-4	✱Q705	F-3				
IC402	H-1	✱Q306	H-3	✱Q706	F-3				
IC403	K-1	✱Q307	J-3	✱Q707	F-3				
IC404	G-2	✱Q308	J-4	✱Q708	F-3				
IC501	B-2	✱Q309	J-4	✱Q709	F-3				
IC502	A-2	✱Q310	K-3	✱Q710	F-3				
IC504	B-2	✱Q311	K-5	✱Q711	G-3				
IC505	B-2	✱Q401	H-2	✱Q712	G-3				
IC506	A-3	✱Q402	J-1	✱Q713	F-3				
IC507	B-5	✱Q403	J-1	✱Q714	G-3				
IC508	B-4	✱Q404	J-2	✱Q715	F-3				
IC509	A-5	✱Q405	J-1	✱Q716	F-3				
IC510	A-4	✱Q406	J-1	✱Q717	F-2				
IC511	A-5	✱Q407	J-1	Q718	E-2				
IC512	J-6	✱Q408	J-1	Q719	F-2				
IC513	G-6	✱Q409	J-2	✱Q720	F-2				
IC514	A-2	✱Q410	J-1	✱Q721	F-2				
IC515 N	C-1	✱Q411	J-2	Q722	F-2				
IC516	C-1	✱Q412	J-2	Q723	G-2				
IC601	E-5	✱Q413	K-2	✱Q724	F-2				
IC602	D-4	✱Q414	K-2	✱Q725	F-2				
IC603	D-3	✱Q415	K-2	✱Q726	F-1				
IC604	D-3	✱Q416	J-2	✱Q727	F-1				
IC605	D-3	✱Q417	H-2						
IC606	E-3	✱Q418	H-2	RV101	L-1				
IC607	D-2	✱Q501	A-1	RV102	K-1				
IC608	E-2	Q502	A-1	RV103	P-4				
IC610	D-2	Q503	A-1	RV201	M-3				
IC612	D-2	Q504	A-1	RV301	J-1				
IC613	C-2	Q505	B-1	RV302	H-1				
IC701	F-1	Q506	B-1	RV303	K-4				
IC702	F-1	Q507	C-2	RV401	H-3				
IC703	R-3	✱Q508	B-4	RV501	B-4				
IC704	R-4	✱Q509	C-3	RV502	C-3				

✱ : B SIDE
__ : UVW-1400/1400P ONLY
N : UVW-1400/1200 ONLY
P : UVW-1400P/1200P ONLY
△ : 1-648-900-11 ONLY
◎ : 1-648-900-12,13 ONLY

For J,UC

① TP201 PB

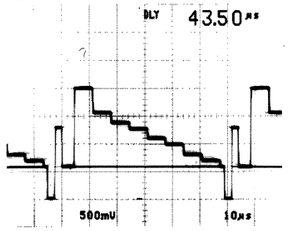

For EK

① TP201 PB

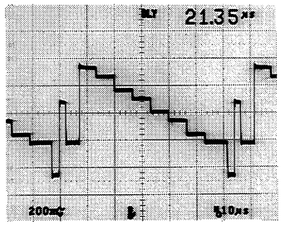

VP-44/44A/44P/44AP(2/7);Y OMC, Y DEM, Y NL DE-EMPH.

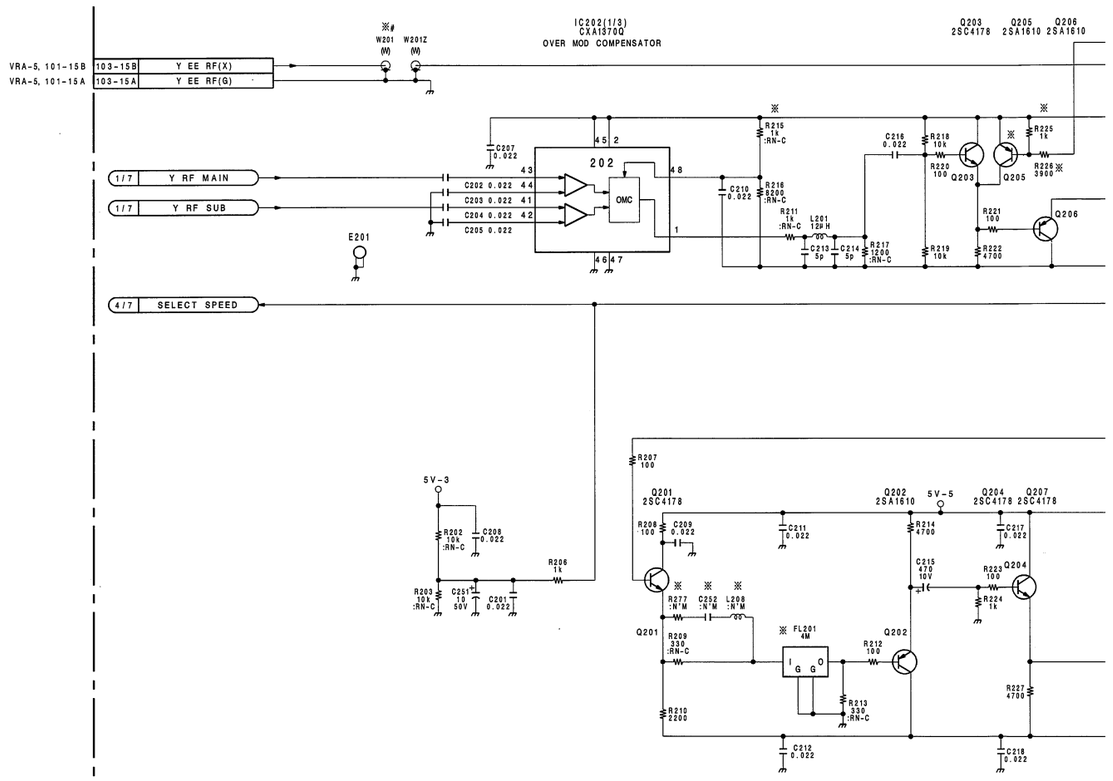

16-74

A B C D E F G H

VP-44/44A/44P/44AP (2/7)

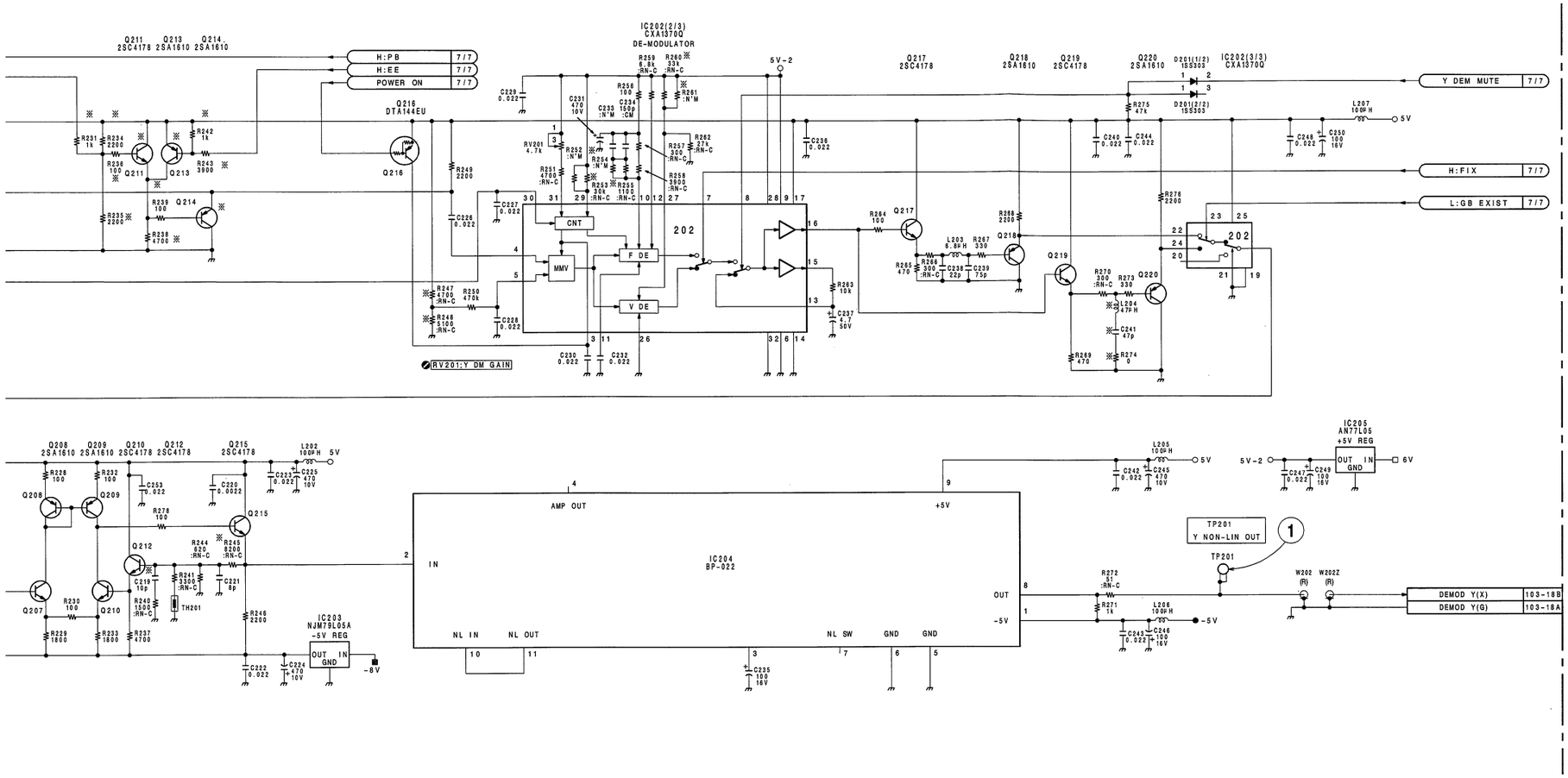

※

REF NO.	UVW-1400	UVW-1200
R225	1000	N M
R226	3900	N M
R231	1000	N M
R234	2200	N M
R235	2200	N M
R236	100	N M
R238	4700	N M
R239	100	N M
R242	1000	N M
R243	3900	N M
Q205	2SA1610	N M
Q211	2SC4178	N M
Q213	2SA1610	N M
Q214	2SA1610	N M
W201	1-952-611-11	N M

REF NO.	J, UC	EK
C219	10P	5P
C241	47P	39P
C252	N M	47P
FL201	4M	5M
L204	47UH	33UH
L208	N M	150UH
R215	※ 1K	※1200
R245	※8200	※6800
R247	※4700	※4700
R248	※5100	※5100
R253	※ 30K	※ 33K
R254	N M	※ 33K
R255	※1100	※ 1K
R260	※ 33K	※ 39K
R261	N M	1M
R274	0	0
R277	N M	※6800

※ = :RN-C

REF NO.	CHANGED INFORMATION	SERIAL NO.
W201	1-952-611-11 → N M	UVW-1200 (J) ;#10351- UVW-1200 (UC);#11091- UVW-1200P(EK);#11721-

VP-44/44A
VP-44P/44AP BOARD (2/7)

BOARD NO.1-648-900-11, 12, 13
UVW-1400 (J) ;#10001-
UVW-1400 (UC) ;#10001-
UVW-1400P (EK) ;#10001-
UVW-1200 (J) ;#10001-
UVW-1200 (UC) ;#10001-
UVW-1200P (EK) ;#10001-

VP-44/44A/44P/44AP (3/7)

VP-44/44A/44P/44AP (1-648-900-11,12,13)

CN103	N-6	IC705	R-4	✱Q510	B-4	RV503	C-3
◎ CN104	C-6	IC706	E-2	Q511	C-2	RV504	B-4
CN105	R-5	IC707	E-1	✱Q512	C-2	RV505	C-3
△ CN601	C-6	IC708	F-5	✱Q513	B-5	RV506	B-5
				✱Q514	C-2	RV507	C-3
DL101	N-4	◎ Q51	B-5	Q515	C-4	RV508	C-5
DL301	J-4	✱Q101	N-5	✱Q516	B-2	RV509	B-4
		✱Q102	N-4	✱Q517	C-5	RV510	A-4
✱D201	N-2	✱Q103	N-5	✱Q518	C-4	RV511	C-4
✱D401	J-2	✱Q104	N-4	✱Q519	B-2	RV512	A-4
✱D501	A-2	✱Q105	N-4	✱Q520	B-2	RV601 P	E-1
✱D502	B-2	✱Q106	N-3	Q521	B-4	RV602	D-1
✱D503	B-3	✱Q107	N-3	Q522	B-3	RV603	E-1
✱D504	A-4	✱Q108	N-4	Q523	C-4	RV604	E-1
✱D601	D-2	✱Q109	N-4	✱Q601	D-5	RV605	D-1
✱D701	R-4	✱Q110	P-4	✱Q602	E-5	RV606	D-1
		✱Q111	P-5	Q603	D-5	RV607	C-1
E101	P-6	✱Q112	P-5	Q604	E-5	RV701	F-1
E102	N-1	✱Q201	M-2	Q605	D-5	RV702	G-1
E201	R-1	✱Q202	N-1	Q606	E-5	RV703	F-1
E301	K-5	✱Q203	P-2	Q607	D-4	RV704	G-1
E401	G-2	✱Q204	N-2	Q608	E-4	RV705	F-3
E501	B-3	✱Q205	P-2	Q609	D-4	RV706	F-3
E502	B-6	✱Q206	P-2	Q610	E-4	RV707	F-3
E601	D-4	✱Q207	N-2	Q611	D-4	RV708	G-3
E602	D-2	✱Q208	N-1	Q612	E-4	RV709	F-2
		✱Q209	N-1	✱Q613	F-5	RV710	F-2
FL201	M-1	✱Q210	N-1	✱Q614 P	F-5		
FL401	H-1	✱Q211	P-2	✱Q615	F-5	TH201	P-2
FL601	E-1	✱Q212	P-1	✱Q616	D-2	TH401	J-2
		✱Q213	R-2	✱Q617	D-2	✱TH601 P	D-1
IC101	P-4	✱Q214	R-2	✱Q618	D-3		
IC102	M-5	✱Q215	P-1	✱Q619	E-3	TP101	L-2
IC103	N-5	✱Q216	N-2	✱Q620	F-5	TP102	P-1
IC104	L-5	✱Q217	M-2	✱Q621	F-5	TP103	L-1
IC202	M-2	✱Q218	M-2	✱Q622	D-1	TP104	P-3
IC203	M-1	✱Q219	M-2	✱Q623	D-1	TP201	P-1
IC204	P-1	✱Q220	M-2	✱Q624	D-1	TP301	G-1
IC205	L-2	✱Q301	J-4	✱Q701	F-4	TP302	J-3
IC301	K-4	✱Q302	J-4	✱Q702	G-4	TP401	L-1
IC302	H-5	✱Q303	H-4	✱Q703	F-3	TP501	C-2
IC303	H-5	✱Q304	H-5	✱Q704	G-3		
IC401	H-2	✱Q305	H-4	✱Q705	F-3		
IC402	H-1	✱Q306	H-3	✱Q706	F-3		
IC403	K-1	✱Q307	J-3	✱Q707	F-3		
IC404	G-2	✱Q308	J-4	✱Q708	F-3		
IC501	B-2	✱Q309	J-4	✱Q709	F-3		
IC502	A-2	✱Q310	K-3	✱Q710	F-3		
IC504	B-2	✱Q311	K-5	✱Q711	G-3		
IC505	B-2	✱Q401	H-2	✱Q712	G-3		
IC506	A-3	✱Q402	J-1	✱Q713	F-3		
IC507	B-5	✱Q403	J-1	✱Q714	G-3		
IC508	B-4	✱Q404	J-2	✱Q715	F-3		
IC509	A-5	✱Q405	J-1	✱Q716	F-3		
IC510	A-4	✱Q406	J-1	✱Q717	F-2		
IC511	A-5	✱Q407	J-1	Q718	E-2		
IC512	J-6	✱Q408	J-1	Q719	F-2		
IC513	G-6	✱Q409	J-2	✱Q720	F-2		
IC514	A-2	✱Q410	J-1	✱Q721	F-2		
IC515 N	C-1	✱Q411	J-2	Q722	F-2		
IC516	C-1	✱Q412	J-2	Q723	G-2		
IC601	E-5	✱Q413	K-2	✱Q724	F-2		
IC602	D-4	✱Q414	K-2	✱Q725	F-2		
IC603	D-3	✱Q415	K-2	✱Q726	F-1		
IC604	D-3	✱Q416	J-2	✱Q727	F-1		
IC605	D-3	✱Q417	H-2				
IC606	E-3	✱Q418	H-2	RV101	L-1		
IC607	D-2	✱Q501	A-1	RV102	K-1		
IC608	E-2	Q502	A-1	RV103	P-4		
IC610	D-2	Q503	A-1	RV201	M-3		
IC612	D-2	Q504	A-1	RV301	J-1		
IC613	C-2	Q505	B-1	RV302	H-1		
IC701	F-1	Q506	B-1	RV303	K-4		
IC702	F-1	Q507	C-2	RV401	H-3		
IC703	R-3	✱Q508	B-4	RV501	B-4		
IC704	R-4	✱Q509	C-3	RV502	C-3		

✱ : B SIDE
__ : UVW-1400/1400P ONLY
N : UVW-1400/1200 ONLY
P : UVW-1400P/1200P ONLY
△ : 1-648-900-11 ONLY
◎ : 1-648-900-12,13 ONLY

VP-44/44A/44P/44AP(3/7);C RF AGC/EQ, C DO DET.

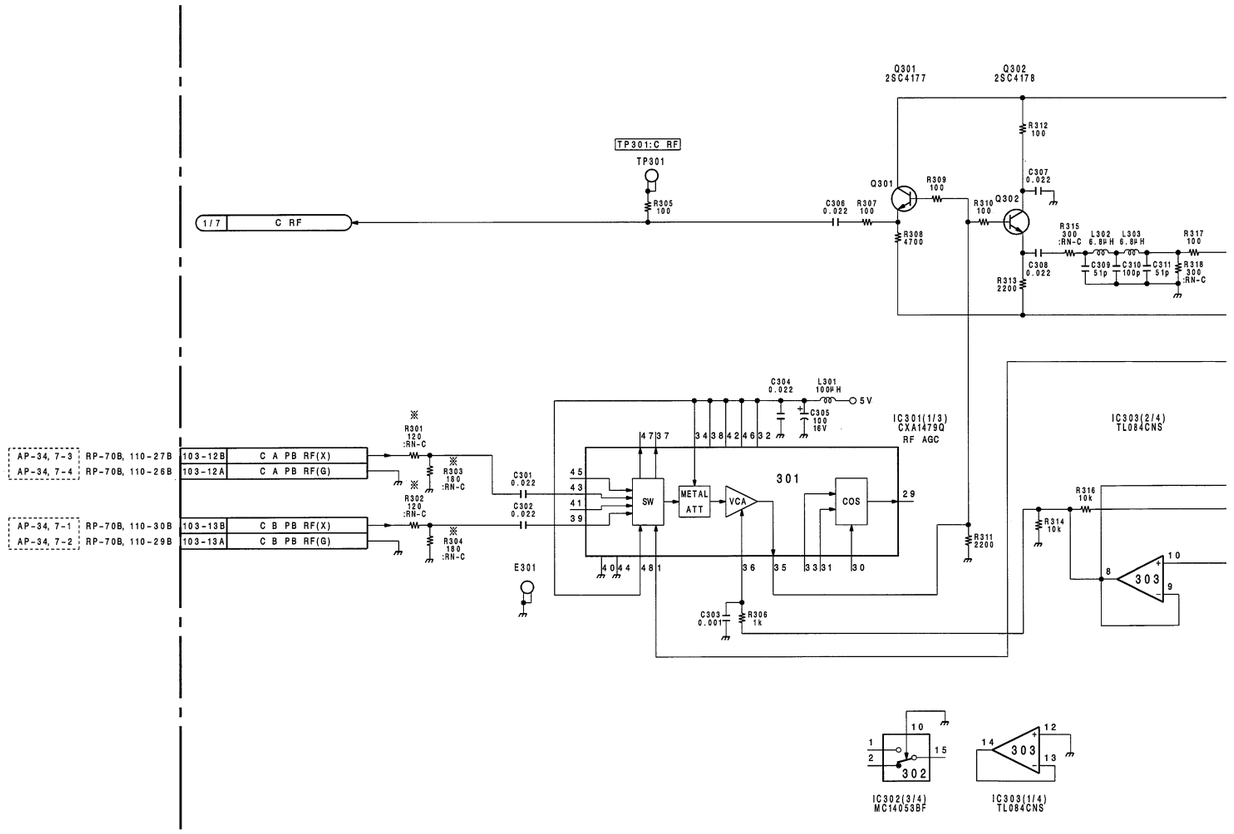

16-76

VP-44/44A/44P/44AP (3/7)

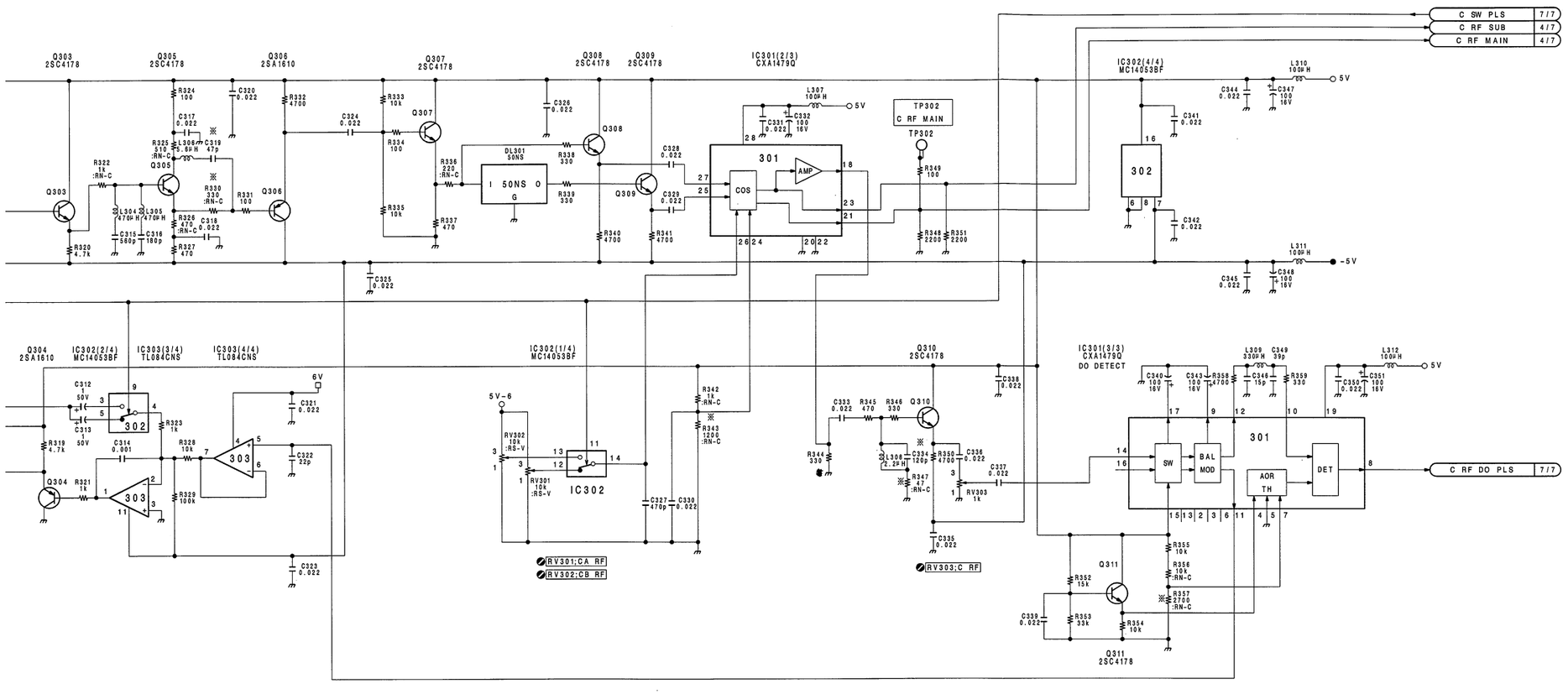

※

REF NO.	UVW-1400		UVW-1200	
	J, UC	EK	J, UC	EK
R301	※120	0	※180	※82
R302	※120	0	※180	※82
R303	※180	※300	※120	※220
R304	※180	※300	※120	※220

REF NO	J, UC	EK
C319	47P	68P
C334	120P	100P
R330	※330	※470
R343	※1200	※1200
R347	※47	※47
R357	※2700	※2700

※ = :RN-C

VP-44/44A
VP-44P/44AP BOARD (3/7)

BOARD NO. 1-648-900-11, 12, 13
UVW-1400 (J) ;#10001-
UVW-1400 (UC) ;#10001-
UVW-1400P (EK) ;#10001-
UVW-1200 (J) ;#10001-
UVW-1200 (UC) ;#10001-
UVW-1200P (EK) ;#10001-

VP-44/44A/44P/44AP (4/7)

VP-44/44A/44P/44AP (1-648-900-11,12,13)

CN103	N-6	IC705	R-4	✱Q510	B-4	RV503	C-3
◎ CN104	C-6	IC706	E-2	Q511	C-2	RV504	B-4
CN105	R-5	IC707	E-1	✱Q512	C-2	RV505	C-3
△ CN601	C-6	IC708	F-5	✱Q513	B-5	RV506	B-5
				✱Q514	C-2	RV507	C-3
DL101	N-4	◎ Q51	B-5	Q515	C-4	RV508	C-5
DL301	J-4	✱Q101	N-5	✱Q516	B-2	RV509	B-4
		✱Q102	N-4	✱Q517	C-5	RV510	A-4
✱D201	N-2	✱Q103	N-5	✱Q518	C-4	RV511	C-4
✱D401	J-2	✱Q104	N-4	✱Q519	B-2	RV512	A-4
✱D501	A-2	✱Q105	N-4	✱Q520	B-2	RV601 P	E-1
✱D502	B-2	✱Q106	N-3	Q521	B-4	RV602	D-1
✱D503	B-3	✱Q107	N-3	Q522	B-3	RV603	E-1
✱D504	A-4	✱Q108	N-4	Q523	C-4	RV604	E-1
✱D601	D-2	✱Q109	N-4	✱Q601	D-5	RV605	D-1
✱D701	R-4	✱Q110	P-4	✱Q602	E-5	RV606	D-1
		✱Q111	P-5	Q603	D-5	RV607	C-1
E101	P-6	✱Q112	P-5	Q604	E-5	RV701	F-1
E102	N-1	✱Q201	M-2	Q605	D-5	RV702	G-1
E201	R-1	✱Q202	N-1	Q606	E-5	RV703	F-1
E301	K-5	✱Q203	P-2	Q607	D-4	RV704	G-1
E401	G-2	✱Q204	N-2	Q608	E-4	RV705	F-3
E501	B-3	✱Q205	P-2	Q609	D-4	RV706	F-3
E502	B-6	✱Q206	P-2	Q610	E-4	RV707	F-3
E601	D-4	✱Q207	N-2	Q611	D-4	RV708	G-3
E602	D-2	✱Q208	N-1	Q612	E-4	RV709	F-2
		✱Q209	N-1	✱Q613	F-5	RV710	F-2
FL201	M-1	✱Q210	N-1	✱Q614 P	F-5		
FL401	H-1	✱Q211	P-2	✱Q615	F-5	TH201	P-2
FL601	E-1	✱Q212	P-1	✱Q616	D-2	TH401	J-2
		✱Q213	R-2	✱Q617	D-2	✱TH601 P	D-1
IC101	P-4	✱Q214	R-2	✱Q618	D-3		
IC102	M-5	✱Q215	P-1	✱Q619	E-3	TP101	L-2
IC103	N-5	✱Q216	N-2	✱Q620	F-5	TP102	P-1
IC104	L-5	✱Q217	M-2	✱Q621	F-5	TP103	L-1
IC202	M-2	✱Q218	M-2	✱Q622	D-1	TP104	P-3
IC203	M-1	✱Q219	M-2	✱Q623	D-1	TP201	P-1
IC204	P-1	✱Q220	M-2	✱Q624	D-1	TP301	G-1
IC205	L-2	✱Q301	J-4	✱Q701	F-4	TP302	J-3
IC301	K-4	✱Q302	J-4	✱Q702	G-4	TP401	L-1
IC302	H-5	✱Q303	H-4	✱Q703	F-3	TP501	C-2
IC303	H-5	✱Q304	H-5	✱Q704	G-3		
IC401	H-2	✱Q305	H-4	✱Q705	F-3		
IC402	H-1	✱Q306	H-3	✱Q706	F-3		
IC403	K-1	✱Q307	J-3	✱Q707	F-3		
IC404	G-2	✱Q308	J-4	✱Q708	F-3		
IC501	B-2	✱Q309	J-4	✱Q709	F-3		
IC502	A-2	✱Q310	K-3	✱Q710	F-3		
IC504	B-2	✱Q311	K-5	✱Q711	G-3		
IC505	B-2	✱Q401	H-2	✱Q712	G-3		
IC506	A-3	✱Q402	J-1	✱Q713	F-3		
IC507	B-5	✱Q403	J-1	✱Q714	G-3		
IC508	B-4	✱Q404	J-2	✱Q715	F-3		
IC509	A-5	✱Q405	J-1	✱Q716	F-3		
IC510	A-4	✱Q406	J-1	✱Q717	F-2		
IC511	A-5	✱Q407	J-1	Q718	E-2		
IC512	J-6	✱Q408	J-1	Q719	F-2		
IC513	G-6	✱Q409	J-2	✱Q720	F-2		
IC514	A-2	✱Q410	J-1	✱Q721	F-2		
IC515 N	C-1	✱Q411	J-2	Q722	F-2		
IC516	C-1	✱Q412	J-2	Q723	G-2		
IC601	E-5	✱Q413	K-2	✱Q724	F-2		
IC602	D-4	✱Q414	K-2	✱Q725	F-2		
IC603	D-3	✱Q415	K-2	✱Q726	F-1		
IC604	D-3	✱Q416	J-2	✱Q727	F-1		
IC605	D-3	✱Q417	H-2				
IC606	E-3	✱Q418	H-2	RV101	L-1		
IC607	D-2	✱Q501	A-1	RV102	K-1		
IC608	E-2	Q502	A-1	RV103	P-4		
IC610	D-2	Q503	A-1	RV201	M-3		
IC612	D-2	Q504	A-1	RV301	J-1		
IC613	C-2	Q505	B-1	RV302	H-1		
IC701	F-1	Q506	B-1	RV303	K-4		
IC702	F-1	Q507	C-2	RV401	H-3		
IC703	R-3	✱Q508	B-4	RV501	B-4		
IC704	R-4	✱Q509	C-3	RV502	C-3		

✱ : B SIDE
__ : UVW-1400/1400P ONLY
N : UVW-1400/1200 ONLY
P : UVW-1400P/1200P ONLY
△ : 1-648-900-11 ONLY
◎ : 1-648-900-12,13 ONLY

For J,UC

① TP401 PB

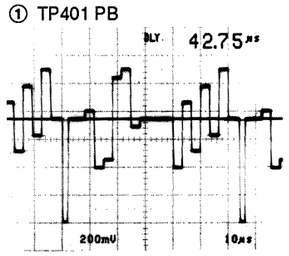

For EK

① TP401 PB

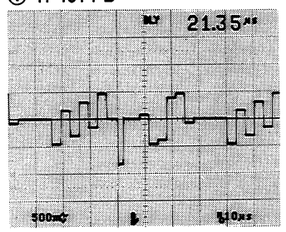

VP-44/44A/44P/44AP(4/7);C OMC, C DEM, C NL DE-EMPH.

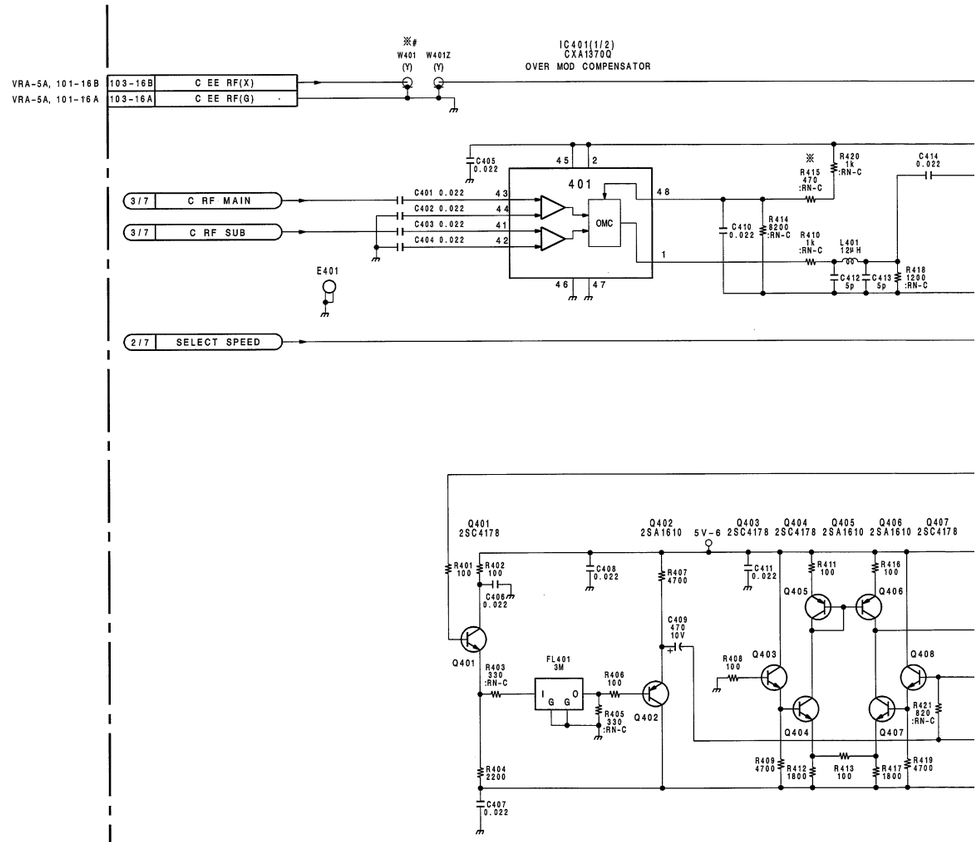

16-78

VP-44/44A/44P/44AP (4/7)

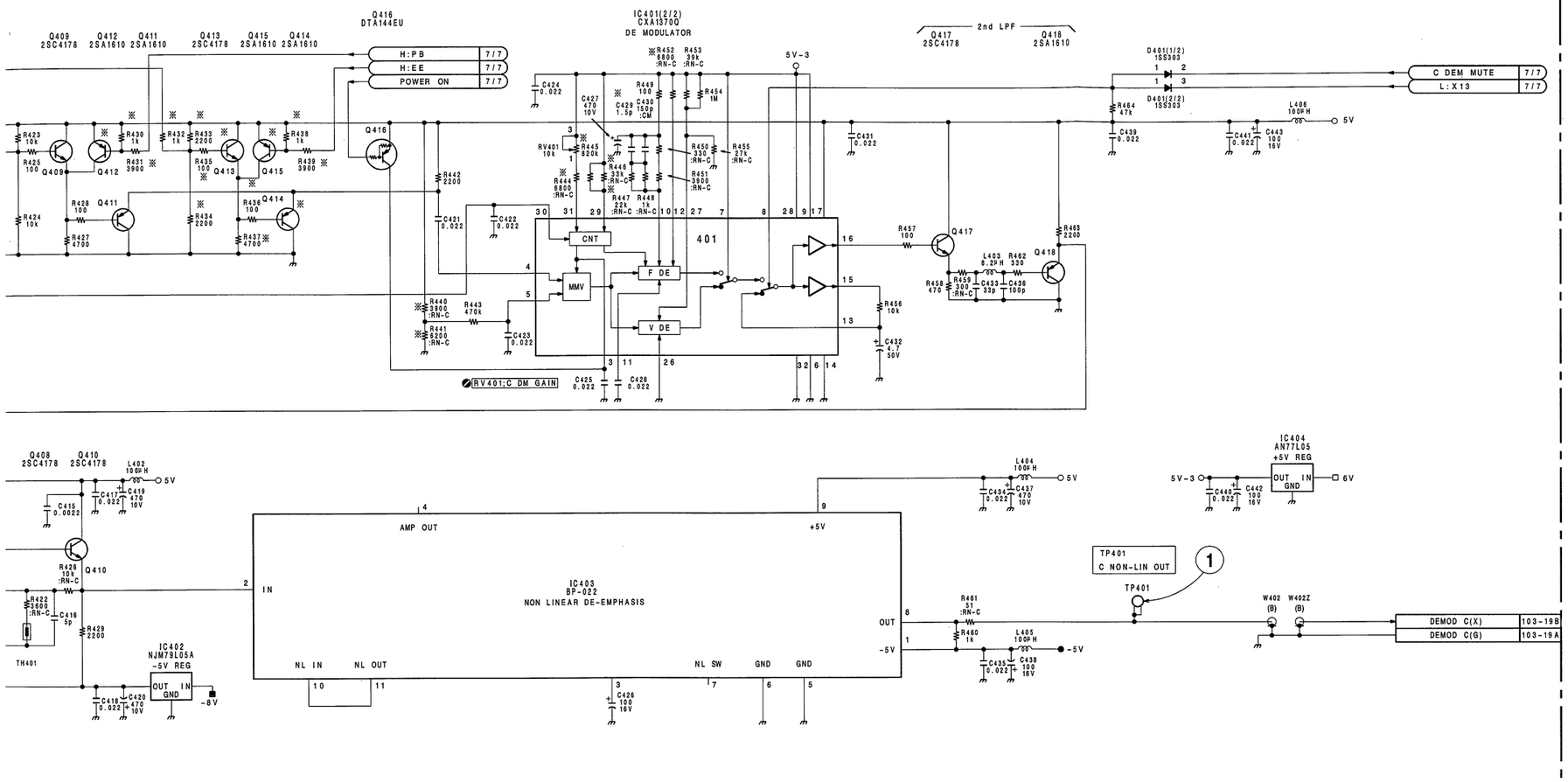

※

REF NO.	UVW-1400	UVW-1200
R430	1000	N M
R431	3900	N M
R432	1000	N M
R433	2200	N M
R434	2200	N M
R435	100	N M
R436	100	N M
R437	4700	N M
R438	1000	N M
R439	3900	N M
Q412	2SA1610	N M
Q413	2SC4178	N M
Q414	2SA1610	N M
Q415	2SA1610	N M
W401	1-952-613-11	N M

REF NO.	J, UC	EK
C429	1.5P	5.0P
R415	※470	※470
R440	※3900	※4700
R441	※6200	※4700
R444	※6800	※5600
R445	820K	N M
R446	※33K	※33K
R447	※22K	※18K
R452	※6800	※5600

※ = :RN-C

#

REF NO.	CHANGED INFORMATION	SERIAL NO.
W401	1-952-613-11 → N M	UVW-1200 (J) ;#10351- UVW-1200 (UC);#11091- UVW-1200P(EK);#11721-

VP-44/44A
VP-44P/44AP BOARD (4/7)

BOARD NO.1-648-900-11, 12, 13
UVW-1400 (J) ;#10001-
UVW-1400 (UC) ;#10001-
UVW-1400P (EK) ;#10001-
UVW-1200 (J) ;#10001-
UVW-1200 (UC) ;#10001-
UVW-1200P (EK) ;#10001-

VP-44/44A/44P/44AP (5/7)

UVW-1400(J)	:Serial No. 10001 through 10420
UVW-1400(UC)	:Serial No. 10001 through 11050
UVW-1400P(EK)	:Serial No. 10001 through 11490
UVW-1200(J)	:Serial No. 10001 through 10350
UVW-1200(UC)	:Serial No. 10001 through 11090
UVW-1200P(EK)	:Serial No. 10001 through 11720

VP-44/44A/44P/44AP(5/7) ;Y(G)/S-Y OUT DRIVE, COMPOSITE OUT DRIVE CHARA/SYNC MIX

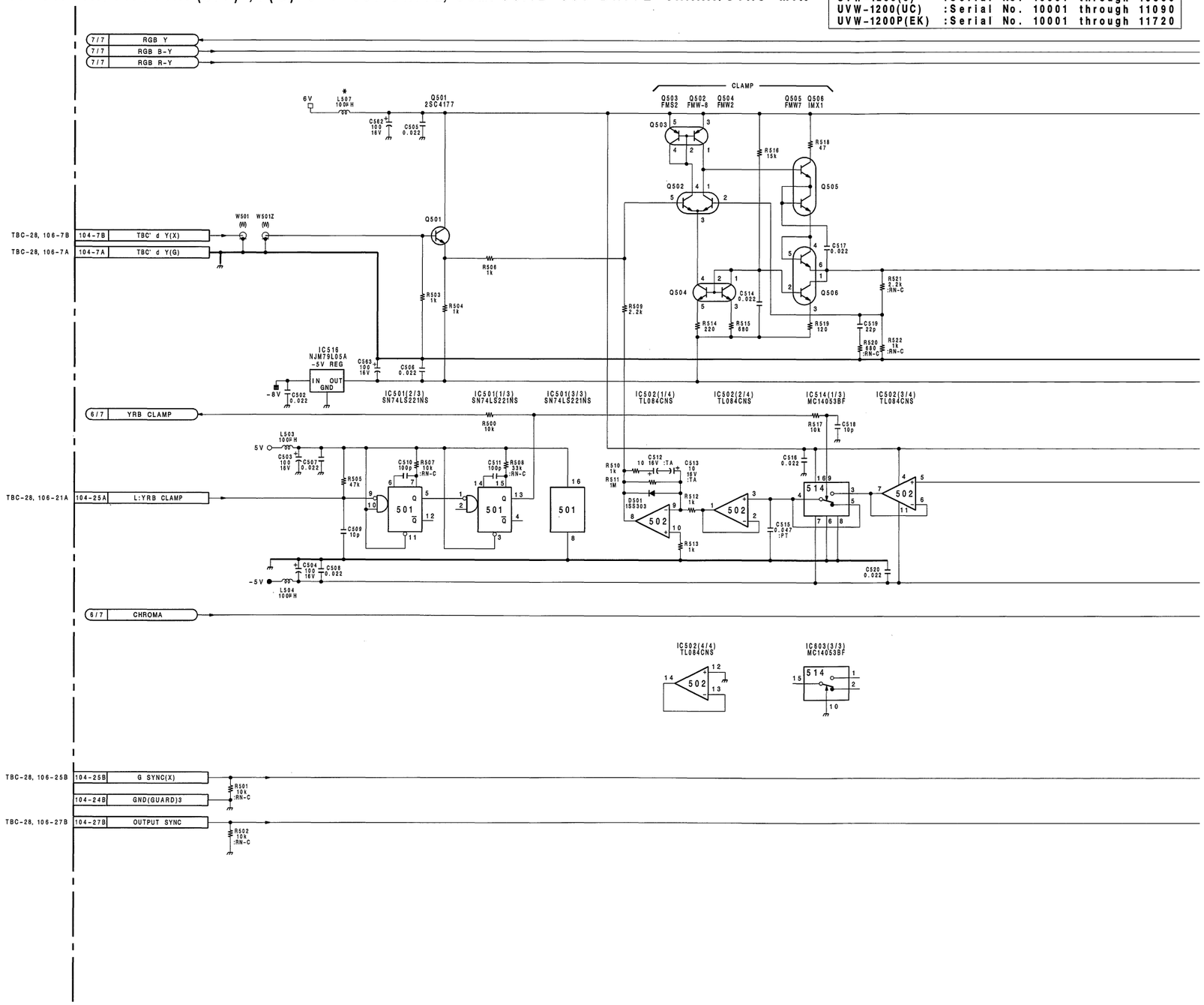

VP-44/44A/44P/44AP (1-648-900-11,12,13)

CN103	N-6	IC705	R-4	✱Q510	B-4	RV503	C-3		
◎CN104	C-6	IC706	E-2	Q511	C-2	RV504	B-4		
CN105	R-5	IC707	E-1	✱Q512	C-2	RV505	C-3		
△CN601	C-6	IC708	F-5	✱Q513	B-5	RV506	B-5		
				✱Q514	C-2	RV507	C-3		
DL101	N-4	◎Q51	B-5	Q515	C-4	RV508	C-5		
DL301	J-4	✱Q101	N-5	✱Q516	B-2	RV509	B-4		
		✱Q102	N-4	✱Q517	C-5	RV510	A-4		
✱D201	N-2	✱Q103	N-5	✱Q518	C-4	RV511	C-4		
✱D401	J-2	✱Q104	N-4	✱Q519	B-2	RV512	A-4		
✱D501	A-2	✱Q105	N-4	✱Q520	B-2	RV601	P E-1		
✱D502	B-2	✱Q106	N-3	Q521	B-4	RV602	D-1		
✱D503	B-3	✱Q107	N-3	Q522	B-3	RV603	E-1		
✱D504	A-4	✱Q108	N-4	Q523	C-4	RV604	E-1		
✱D601	D-2	✱Q109	N-4	✱Q601	D-5	RV605	D-1		
✱D701	R-4	✱Q110	P-4	✱Q602	E-5	RV606	D-1		
		✱Q111	P-5	Q603	D-5	RV607	C-1		
E101	P-6	✱Q112	P-5	Q604	E-5	RV701	F-1		
E102	N-1	✱Q201	M-2	Q605	D-5	RV702	G-1		
E201	R-1	✱Q202	N-1	Q606	E-5	RV703	F-1		
E301	K-5	✱Q203	P-2	Q607	D-4	RV704	G-1		
E401	G-2	✱Q204	N-2	Q608	E-4	RV705	F-3		
E501	B-3	✱Q205	P-2	Q609	D-4	RV706	F-3		
E502	B-6	✱Q206	P-2	Q610	E-4	RV707	F-3		
E601	D-4	✱Q207	N-2	Q611	D-4	RV708	G-3		
E602	D-2	✱Q208	N-1	Q612	E-4	RV709	F-2		
		✱Q209	N-1	✱Q613	F-5	RV710	F-2		
FL201	M-1	✱Q210	N-1	✱Q614	P F-5				
FL401	H-1	✱Q211	P-2	✱Q615	F-5	TH201	P-2		
FL601	E-1	✱Q212	P-1	✱Q616	D-2	TH401	J-2		
		✱Q213	R-2	✱Q617	D-2	✱TH601	P D-1		
IC101	P-4	✱Q214	R-2	✱Q618	D-3				
IC102	M-5	✱Q215	P-1	✱Q619	E-3	TP101	L-2		
IC103	N-5	✱Q216	N-2	✱Q620	F-5	TP102	P-1		
IC104	L-5	✱Q217	M-2	✱Q621	F-5	TP103	L-1		
IC202	M-2	✱Q218	M-2	✱Q622	D-1	TP104	P-3		
IC203	M-1	✱Q219	M-2	✱Q623	D-1	TP201	P-1		
IC204	P-1	✱Q220	M-2	✱Q624	D-1	TP301	G-1		
IC205	L-2	✱Q301	J-4	✱Q701	F-4	TP302	J-3		
IC301	K-4	✱Q302	J-4	✱Q702	G-4	TP401	L-1		
IC302	H-5	✱Q303	H-4	✱Q703	F-3	TP501	C-2		
IC303	H-5	✱Q304	H-5	✱Q704	G-3				
IC401	H-2	✱Q305	H-4	✱Q705	F-3				
IC402	H-1	✱Q306	H-3	✱Q706	F-3				
IC403	K-1	✱Q307	J-3	✱Q707	F-3				
IC404	G-2	✱Q308	J-4	✱Q708	F-3				
IC501	B-2	✱Q309	J-4	✱Q709	F-3				
IC502	A-2	✱Q310	K-3	✱Q710	F-3				
IC504	B-2	✱Q311	K-5	✱Q711	G-3				
IC505	B-2	✱Q401	H-2	✱Q712	G-3				
IC506	A-3	✱Q402	J-1	✱Q713	F-3				
IC507	B-5	✱Q403	J-1	✱Q714	G-3				
IC508	B-4	✱Q404	J-2	✱Q715	F-3				
IC509	A-5	✱Q405	J-1	✱Q716	F-3				
IC510	A-4	✱Q406	J-1	✱Q717	F-2				
IC511	A-5	✱Q407	J-1	Q718	E-2				
IC512	J-6	✱Q408	J-1	Q719	F-2				
IC513	G-6	✱Q409	J-2	✱Q720	F-2				
IC514	A-2	✱Q410	J-1	✱Q721	F-2				
IC515 N	C-1	✱Q411	J-2	Q722	F-2				
IC516	C-1	✱Q412	J-2	Q723	G-2				
IC601	E-5	✱Q413	K-2	✱Q724	F-2				
IC602	D-4	✱Q414	K-2	✱Q725	F-2				
IC603	D-3	✱Q415	K-2	✱Q726	F-1				
IC604	D-3	✱Q416	J-2	✱Q727	F-1				
IC605	D-3	✱Q417	H-2						
IC606	E-3	✱Q418	H-2	RV101	L-1				
IC607	D-2	✱Q501	A-1	RV102	K-1				
IC608	E-2	Q502	A-1	RV103	P-4				
IC610	D-2	Q503	A-1	RV201	M-3				
IC612	D-2	Q504	A-1	RV301	J-1				
IC613	C-2	Q505	B-1	RV302	H-1				
IC701	F-1	Q506	B-1	RV303	K-4				
IC702	F-1	Q507	C-2	RV401	H-3				
IC703	R-3	✱Q508	B-4	RV501	B-4				
IC704	R-4	✱Q509	C-3	RV502	C-3				

✱ : B SIDE
__ : UVW-1400/1400P ONLY
N : UVW-1400/1200 ONLY
P : UVW-1400P/1200P ONLY
△ : 1-648-900-11 ONLY
◎ : 1-648-900-12,13 ONLY

16-80 (a)

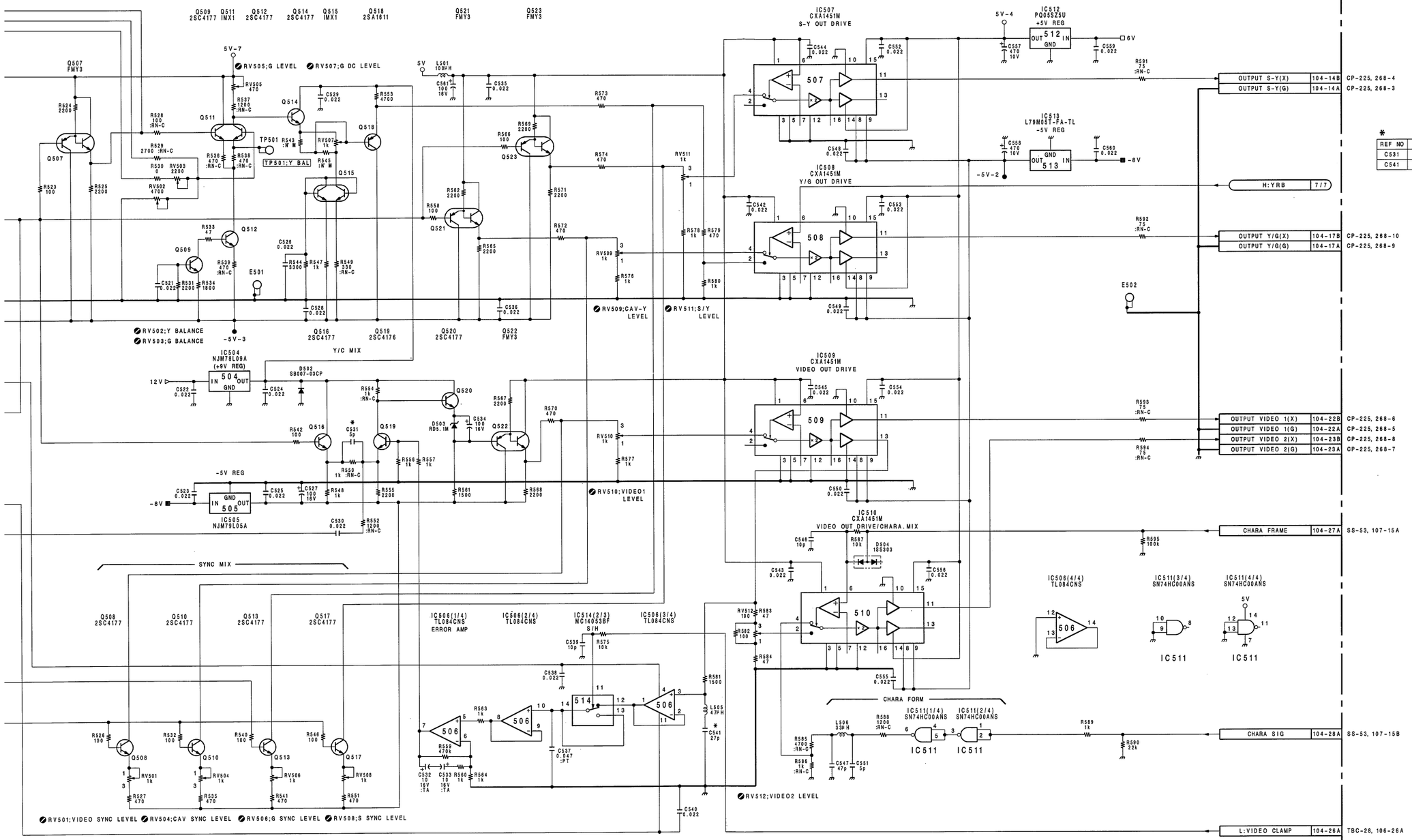

*

REF NO	J, UC	EK
C531	7P	5P
C541	47P	27P

VP-44/44A
VP-44P/44AP BOARD (5/7)

BOARD NO. 1-648-900-11

UVW-1400 (J) ;#10001-11420
UVW-1400 (UC) ;#10001-11050
UVW-1400P (EK) ;#10001-11490
UVW-1200 (J) ;#10001-10350
UVW-1200 (UC) ;#10001-11090
UVW-1200P (EK) ;#10001-11720

VP-44/44A/44P/44AP (5/7)

VP-44/44A/44P/44AP(5/7) ;Y(G)/S-Y OUT DRIVE, COMPOSITE OUT DRIVE CHARA/SYNC MIX

UVW-1400(J)	:Serial No.	10421 and higher
UVW-1400(UC)	:Serial No.	11051 and higher
UVW-1400P(EK)	:Serial No.	11491 and higher
UVW-1200(J)	:Serial No.	10351 and higher
UVW-1200(UC)	:Serial No.	11091 and higher
UVW-1200P(EK)	:Serial No.	11721 and higher

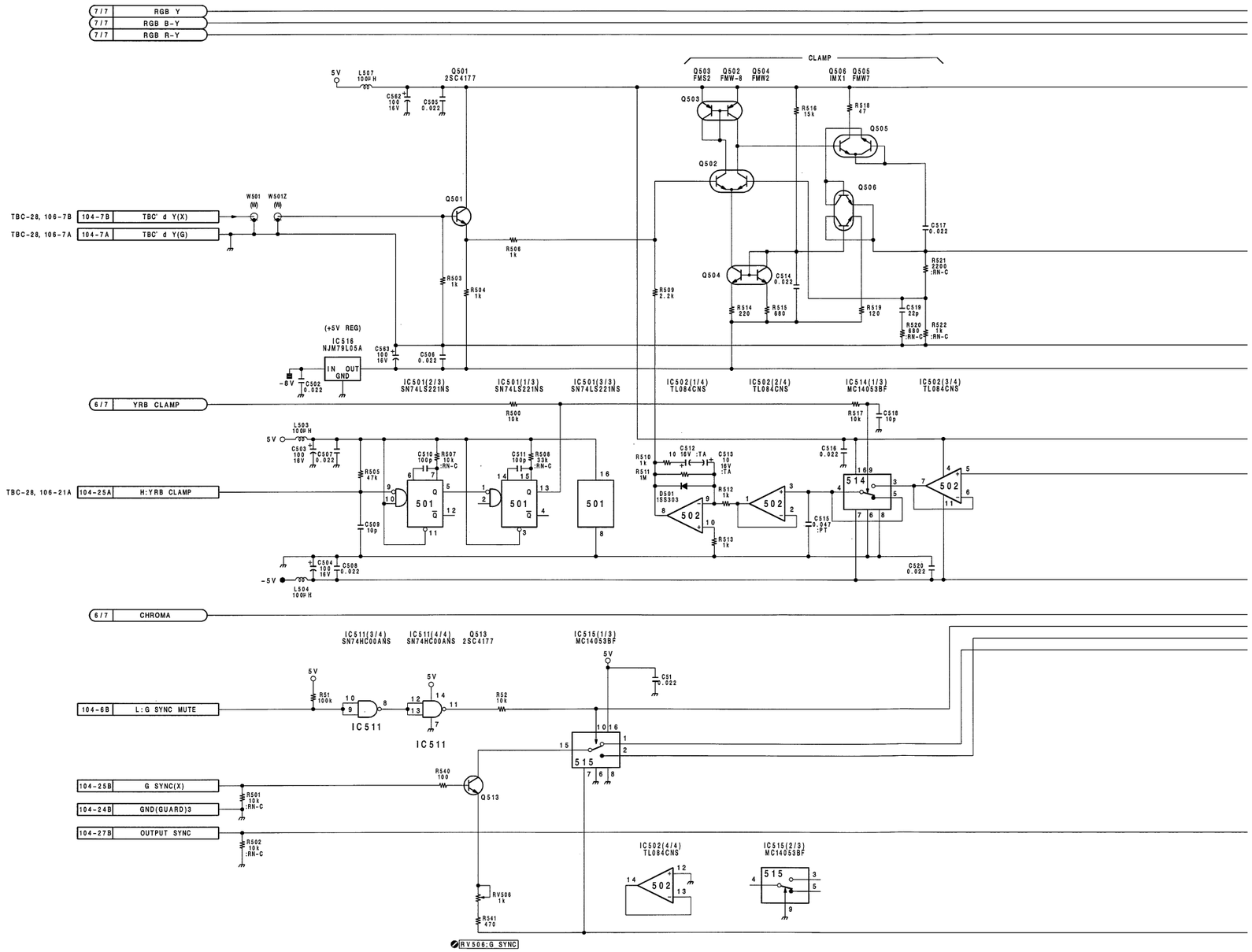

16-80 (b)

VP-44/44A/44P/44AP (5/7)

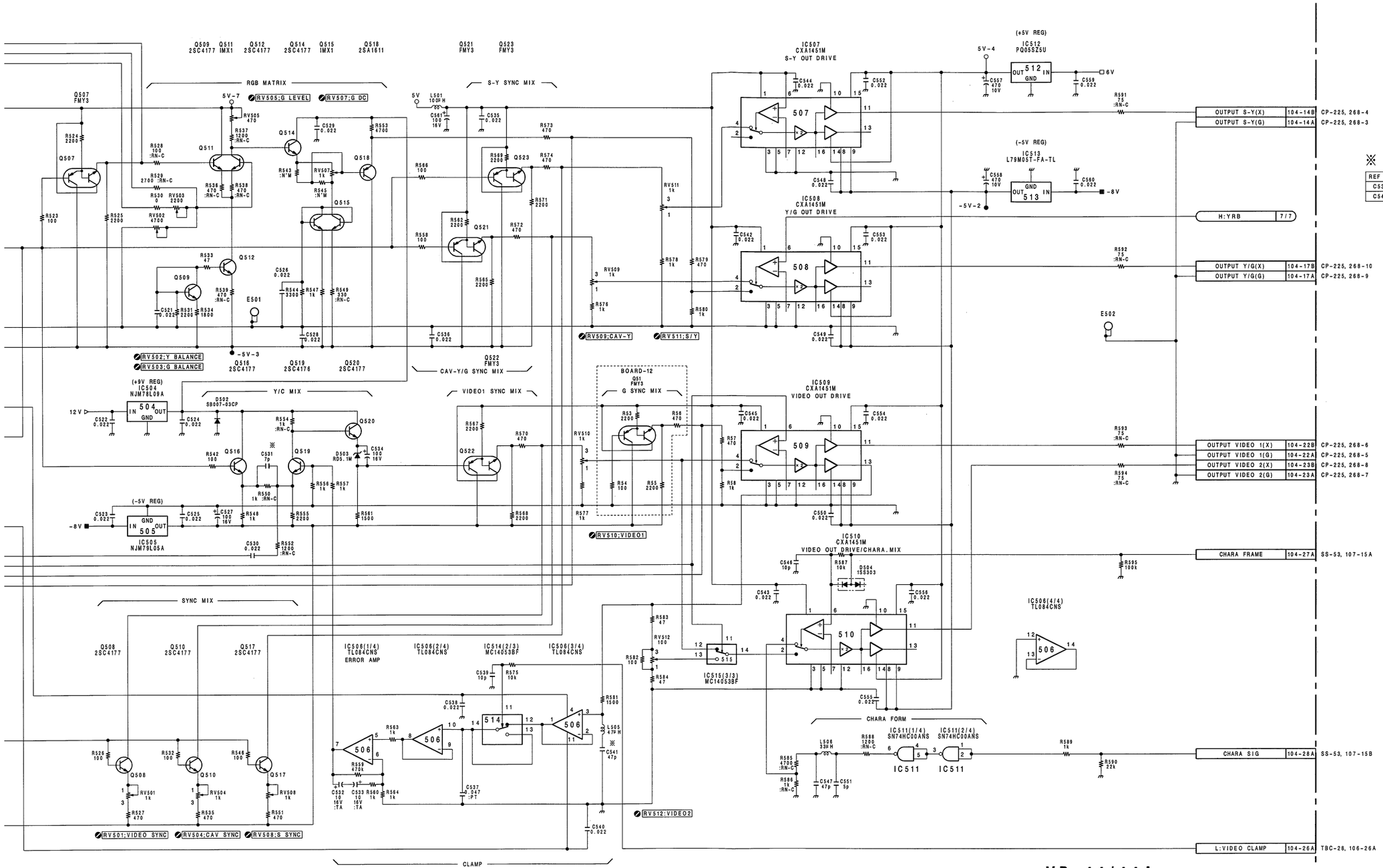

VP-44/44A
VP-44P/44AP BOARD (5/7)

BOARD NO.1-648-900-12, 13
UVW-1400 (J) ;#10421-
UVW-1400 (UC) ;#11051-
UVW-1400P (EK) ;#11491-
UVW-1200 (J) ;#10351-
UVW-1200 (UC) ;#11091-
UVW-1200P (EK) ;#11721-

VP-44/44A/44P/44AP (1-648-900-11,12,13)

CN103	N-6	IC705	R-4	✱Q510	B-4	RV503	C-3
◎ CN104	C-6	IC706	E-2	Q511	C-2	RV504	B-4
CN105	R-5	IC707	E-1	✱Q512	C-2	RV505	C-3
△ CN601	C-6	IC708	F-5	✱Q513	B-5	RV506	B-5
				✱Q514	C-2	RV507	C-3
DL101	N-4	◎ Q51	B-5	Q515	C-4	RV508	C-5
DL301	J-4	✱Q101	N-5	✱Q516	B-2	RV509	B-4
		✱Q102	N-4	✱Q517	C-5	RV510	A-4
✱D201	N-2	✱Q103	N-5	✱Q518	C-4	RV511	C-4
✱D401	J-2	✱Q104	N-4	✱Q519	B-2	RV512	A-4
✱D501	A-2	✱Q105	N-4	✱Q520	B-2	RV601 P	E-1
✱D502	B-2	✱Q106	N-3	Q521	B-4	RV602	D-1
✱D503	B-3	✱Q107	N-3	Q522	B-3	RV603	E-1
✱D504	A-4	✱Q108	N-4	Q523	C-4	RV604	E-1
✱D601	D-2	✱Q109	N-4	✱Q601	D-5	RV605	D-1
✱D701	R-4	✱Q110	P-4	✱Q602	E-5	RV606	D-1
		✱Q111	P-5	Q603	D-5	RV607	C-1
E101	P-6	✱Q112	P-5	Q604	E-5	RV701	F-1
E102	N-1	✱Q201	M-2	Q605	D-5	RV702	G-1
E201	R-1	✱Q202	N-1	Q606	E-5	RV703	F-1
E301	K-5	✱Q203	P-2	Q607	D-4	RV704	G-1
E401	G-2	✱Q204	N-2	Q608	E-4	RV705	F-3
E501	B-3	✱Q205	P-2	Q609	D-4	RV706	F-3
E502	B-6	✱Q206	P-2	Q610	E-4	RV707	F-3
E601	D-4	✱Q207	N-2	Q611	D-4	RV708	G-3
E602	D-2	✱Q208	N-1	Q612	E-4	RV709	F-2
		✱Q209	N-1	✱Q613	F-5	RV710	F-2
FL201	M-1	✱Q210	N-1	✱Q614 P	F-5		
FL401	H-1	✱Q211	P-2	✱Q615	F-5	TH201	P-2
FL601	E-1	✱Q212	P-1	✱Q616	D-2	TH401	J-2
		✱Q213	R-2	✱Q617	D-2	✱TH601 P	D-1
IC101	P-4	✱Q214	R-2	✱Q618	D-3		
IC102	M-5	✱Q215	P-1	✱Q619	E-3	TP101	L-2
IC103	N-5	✱Q216	N-2	✱Q620	F-5	TP102	P-1
IC104	L-5	✱Q217	M-2	✱Q621	F-5	TP103	L-1
IC202	M-2	✱Q218	M-2	✱Q622	D-1	TP104	P-3
IC203	M-1	✱Q219	M-2	✱Q623	D-1	TP201	P-1
IC204	P-1	✱Q220	M-2	✱Q624	D-1	TP301	G-1
IC205	L-2	✱Q301	J-4	✱Q701	F-4	TP302	J-3
IC301	K-4	✱Q302	J-4	✱Q702	G-4	TP401	L-1
IC302	H-5	✱Q303	H-4	✱Q703	F-3	TP501	C-2
IC303	H-5	✱Q304	H-5	✱Q704	G-3		
IC401	H-2	✱Q305	H-4	✱Q705	F-3		
IC402	H-1	✱Q306	H-3	✱Q706	F-3		
IC403	K-1	✱Q307	J-3	✱Q707	F-3		
IC404	G-2	✱Q308	J-4	✱Q708	F-3		
IC501	B-2	✱Q309	J-4	✱Q709	F-3		
IC502	A-2	✱Q310	K-3	✱Q710	F-3		
IC504	B-2	✱Q311	K-5	✱Q711	G-3		
IC505	B-2	✱Q401	H-2	✱Q712	G-3		
IC506	A-3	✱Q402	J-1	✱Q713	F-3		
IC507	B-5	✱Q403	J-1	✱Q714	G-3		
IC508	B-4	✱Q404	J-2	✱Q715	F-3		
IC509	A-5	✱Q405	J-1	✱Q716	F-3		
IC510	A-4	✱Q406	J-1	✱Q717	F-2		
IC511	A-5	✱Q407	J-1	Q718	E-2		
IC512	J-6	✱Q408	J-1	Q719	F-2		
IC513	G-6	✱Q409	J-2	✱Q720	F-2		
IC514	A-2	✱Q410	J-1	✱Q721	F-2		
IC515 N	C-1	✱Q411	J-2	Q722	F-2		
IC516	C-1	✱Q412	J-2	Q723	G-2		
IC601	E-5	✱Q413	K-2	✱Q724	F-2		
IC602	D-4	✱Q414	K-2	✱Q725	F-2		
IC603	D-3	✱Q415	K-2	✱Q726	F-1		
IC604	D-3	✱Q416	J-2	✱Q727	F-1		
IC605	D-3	✱Q417	H-2				
IC606	E-3	✱Q418	H-2	RV101	L-1		
IC607	D-2	✱Q501	A-1	RV102	K-1		
IC608	E-2	Q502	A-1	RV103	P-4		
IC610	D-2	Q503	A-1	RV201	M-3		
IC612	D-2	Q504	A-1	RV301	J-1		
IC613	C-2	Q505	B-1	RV302	H-1		
IC701	F-1	Q506	B-1	RV303	K-4		
IC702	F-1	Q507	C-2	RV401	H-3		
IC703	R-3	✱Q508	B-4	RV501	B-4		
IC704	R-4	✱Q509	C-3	RV502	C-3		

✱ : B SIDE
__ : UVW-1400/1400P ONLY
N : UVW-1400/1200 ONLY
P : UVW-1400P/1200P ONLY
△ : 1-648-900-11 ONLY
◎ : 1-648-900-12,13 ONLY

VP-44/44A/44P/44AP (6/7)

VP-44/44A/44P/44AP(6/7);ENCODE, S-C OUT DRIVE

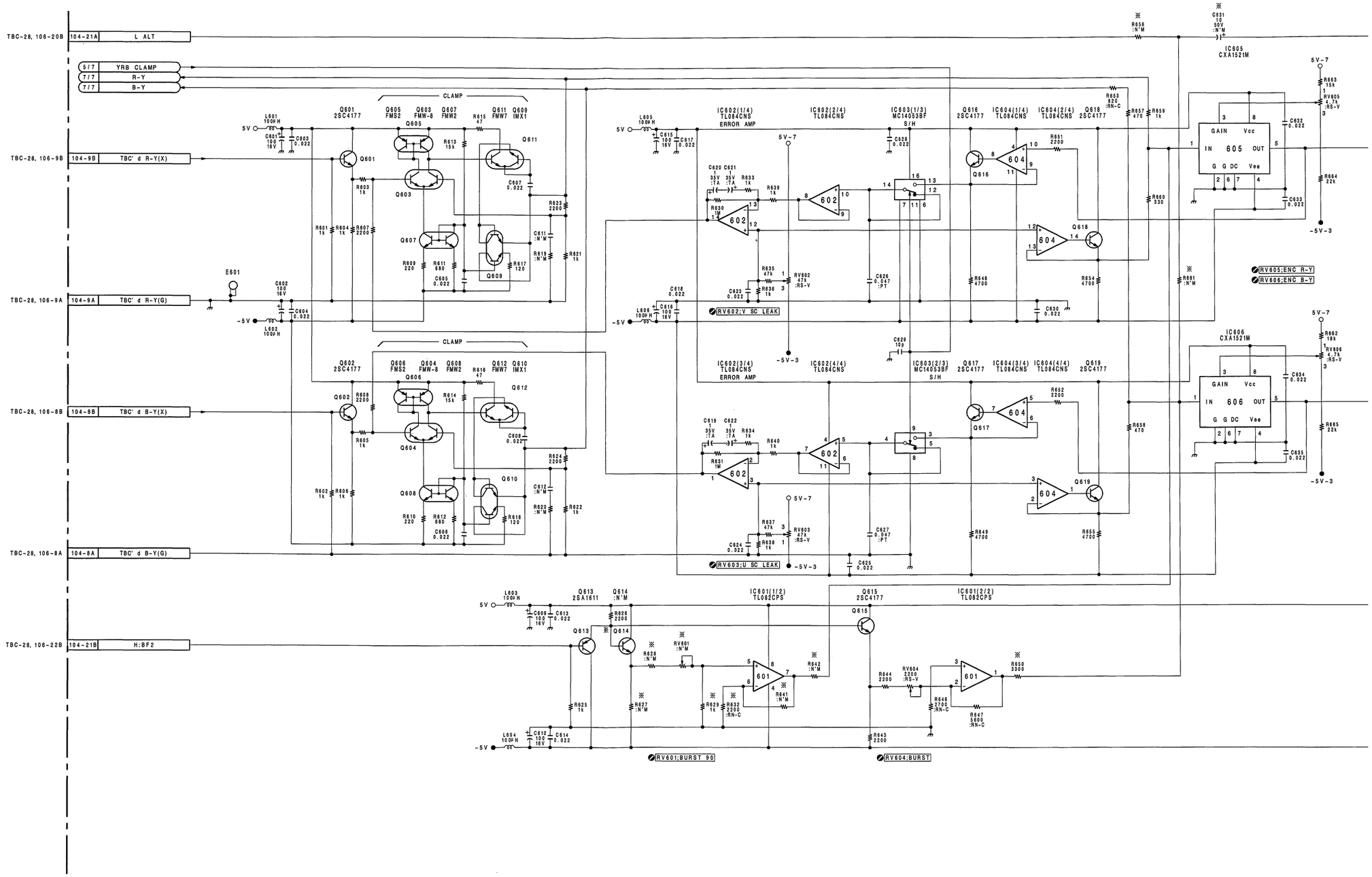

16-84

VP-44/44A/44P/44AP (6/7)

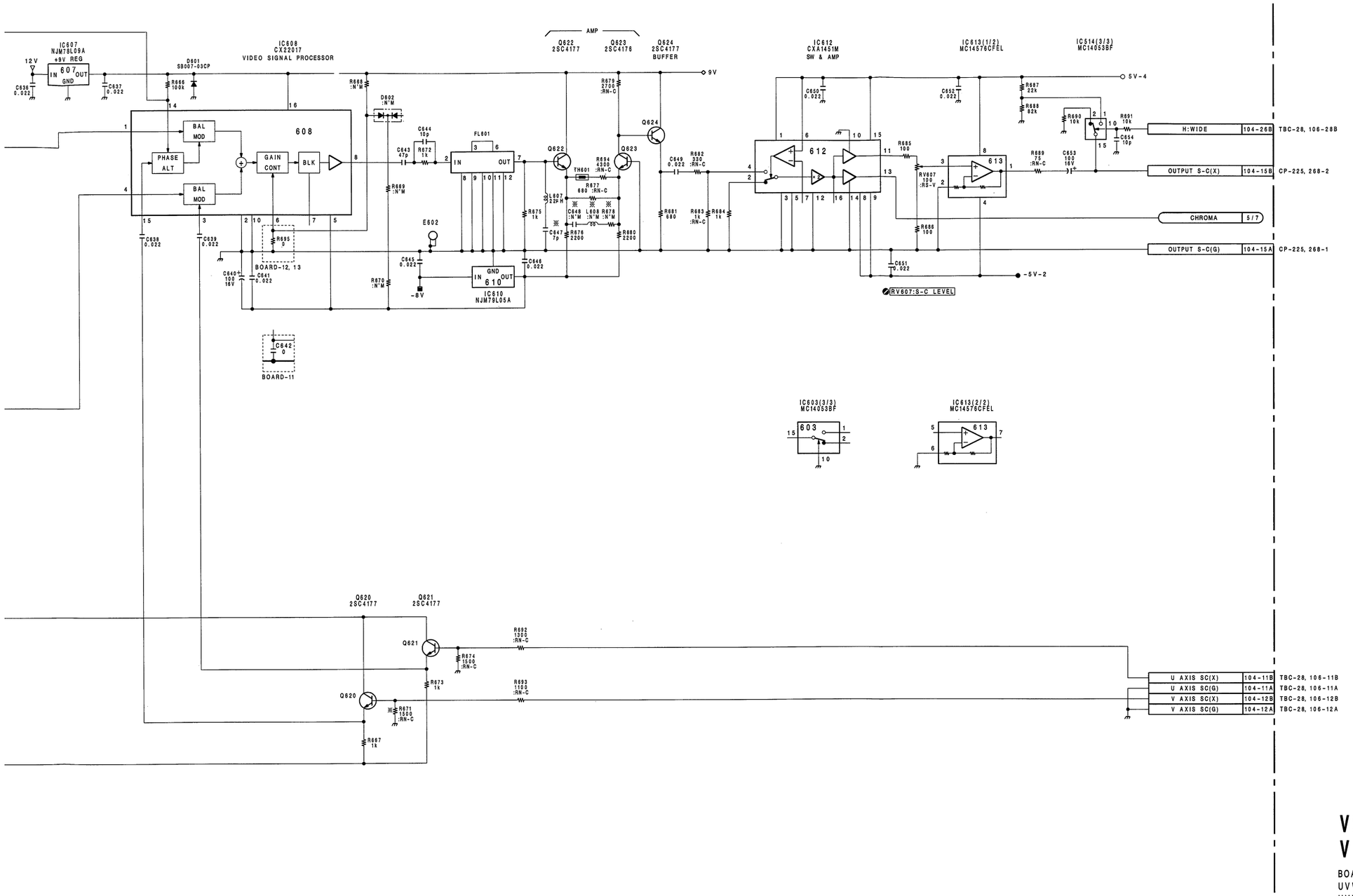

※

REF NO	J, UC	EK
C631	N M	10/50V
C647	7P	4P
C648	N M	10P
R627	N M	2200
R628	N M	0
R629	1K	3900
R632	※2200	※1500
R641	N M	※2200
R642	N M	4700
R650	3300	3900
R656	N M	22K
R661	N M	330K
R671	※1500	※1300
R678	N M	1K
L608	N M	22UH
RV601	N M	2200(:RS-V)
Q614	N M	2SC4177

※=:RN-C

VP-44/44A
VP-44P/44AP BOARD (6/7)

BOARD NO. 1-648-900-11, 12, 13
UVW-1400 (J) ;#10001-
UVW-1400 (UC) ;#10001-
UVW-1400P (EK) ;#10001-
UVW-1200 (J) ;#10001-
UVW-1200 (UC) ;#10001-
UVW-1200P (EK) ;#10001-

VP-44/44A/44P/44AP (1-648-900-11,12,13)

	CN103	N-6		IC705	R-4		✱Q510	B-4		RV503	C-3
◎	CN104	C-6		IC706	E-2		Q511	C-2		RV504	B-4
	CN105	R-5		IC707	E-1		✱Q512	C-2		RV505	C-3
△	CN601	C-6		IC708	F-5		✱Q513	B-5		RV506	B-5
							✱Q514	C-2		RV507	C-3
	DL101	N-4	◎	Q51	B-5		Q515	C-4		RV508	C-5
	DL301	J-4		✱Q101	N-5		✱Q516	B-2		RV509	B-4
				✱Q102	N-4		✱Q517	C-5		RV510	A-4
	✱D201	N-2		✱Q103	N-5		✱Q518	C-4		RV511	C-4
	✱D401	J-2		✱Q104	N-4		✱Q519	B-2		RV512	A-4
	✱D501	A-2		✱Q105	N-4		✱Q520	B-2		RV601	P E-1
	✱D502	B-2		✱Q106	N-3		Q521	B-4		RV602	D-1
	✱D503	B-3		✱Q107	N-3		Q522	B-3		RV603	E-1
	✱D504	A-4		✱Q108	N-4		Q523	C-4		RV604	E-1
	✱D601	D-2		✱Q109	N-4		✱Q601	D-5		RV605	D-1
	✱D701	R-4		✱Q110	P-4		✱Q602	E-5		RV606	D-1
				✱Q111	P-5		Q603	D-5		RV607	C-1
	E101	P-6		✱Q112	P-5		Q604	E-5		RV701	F-1
	E102	N-1		✱Q201	M-2		Q605	D-5		RV702	G-1
	E201	R-1		✱Q202	N-1		Q606	E-5		RV703	F-1
	E301	K-5		✱Q203	P-2		Q607	D-4		RV704	G-1
	E401	G-2		✱Q204	N-2		Q608	E-4		RV705	F-3
	E501	B-3		✱Q205	P-2		Q609	D-4		RV706	F-3
	E502	B-6		✱Q206	P-2		Q610	E-4		RV707	F-3
	E601	D-4		✱Q207	N-2		Q611	D-4		RV708	G-3
	E602	D-2		✱Q208	N-1		Q612	E-4		RV709	F-2
				✱Q209	N-1		✱Q613	F-5		RV710	F-2
	FL201	M-1		✱Q210	N-1		✱Q614	P F-5			
	FL401	H-1		✱Q211	P-2		✱Q615	F-5		TH201	P-2
	FL601	E-1		✱Q212	P-1		✱Q616	D-2		TH401	J-2
				✱Q213	R-2		✱Q617	D-2		✱TH601	P D-1
	IC101	P-4		✱Q214	R-2		✱Q618	D-3			
	IC102	M-5		✱Q215	P-1		✱Q619	E-3		TP101	L-2
	IC103	N-5		✱Q216	N-2		✱Q620	F-5		TP102	P-1
	IC104	L-5		✱Q217	M-2		✱Q621	F-5		TP103	L-1
	IC202	M-2		✱Q218	M-2		✱Q622	D-1		TP104	P-3
	IC203	M-1		✱Q219	M-2		✱Q623	D-1		TP201	P-1
	IC204	P-1		✱Q220	M-2		✱Q624	D-1		TP301	G-1
	IC205	L-2		✱Q301	J-4		✱Q701	F-4		TP302	J-3
	IC301	K-4		✱Q302	J-4		✱Q702	G-4		TP401	L-1
	IC302	H-5		✱Q303	H-4		✱Q703	F-3		TP501	C-2
	IC303	H-5		✱Q304	H-5		✱Q704	G-3			
	IC401	H-2		✱Q305	H-4		✱Q705	F-3			
	IC402	H-1		✱Q306	H-3		✱Q706	F-3			
	IC403	K-1		✱Q307	J-3		✱Q707	F-3			
	IC404	G-2		✱Q308	J-4		✱Q708	F-3			
	IC501	B-2		✱Q309	J-4		✱Q709	F-3			
	IC502	A-2		✱Q310	K-3		✱Q710	F-3			
	IC504	B-2		✱Q311	K-5		✱Q711	G-3			
	IC505	B-2		✱Q401	H-2		✱Q712	G-3			
	IC506	A-3		✱Q402	J-1		✱Q713	F-3			
	IC507	B-5		✱Q403	J-1		✱Q714	G-3			
	IC508	B-4		✱Q404	J-2		✱Q715	F-3			
	IC509	A-5		✱Q405	J-1		✱Q716	F-3			
	IC510	A-4		✱Q406	J-1		✱Q717	F-2			
	IC511	A-5		✱Q407	J-1		Q718	E-2			
	IC512	J-6		✱Q408	J-1		Q719	F-2			
	IC513	G-6		✱Q409	J-2		✱Q720	F-2			
	IC514	A-2		✱Q410	J-1		✱Q721	F-2			
	IC515	N C-1		✱Q411	J-2		Q722	F-2			
	IC516	C-1		✱Q412	J-2		Q723	G-2			
	IC601	E-5		✱Q413	K-2		✱Q724	F-2			
	IC602	D-4		✱Q414	K-2		✱Q725	F-2			
	IC603	D-3		✱Q415	K-2		✱Q726	F-1			
	IC604	D-3		✱Q416	J-2		✱Q727	F-1			
	IC605	D-3		✱Q417	H-2						
	IC606	E-3		✱Q418	H-2		RV101	L-1			
	IC607	D-2		✱Q501	A-1		RV102	K-1			
	IC608	E-2		Q502	A-1		RV103	P-4			
	IC610	D-2		Q503	A-1		RV201	M-3			
	IC612	D-2		Q504	A-1		RV301	J-1			
	IC613	C-2		Q505	B-1		RV302	H-1			
	IC701	F-1		Q506	B-1		RV303	K-4			
	IC702	F-1		Q507	C-2		RV401	H-3			
	IC703	R-3		✱Q508	B-4		RV501	B-4			
	IC704	R-4		✱Q509	C-3		RV502	C-3			

✱ : B SIDE
__ : UVW-1400/1400P ONLY
N : UVW-1400/1200 ONLY
P : UVW-1400P/1200P ONLY
△ : 1-648-900-11 ONLY
◎ : 1-648-900-12,13 ONLY

VP-44/44A/44P/44AP (7/7)

VP-44/44A/44P/44AP(7/7);R-Y(R)/B-Y(B) OUT DRIVE

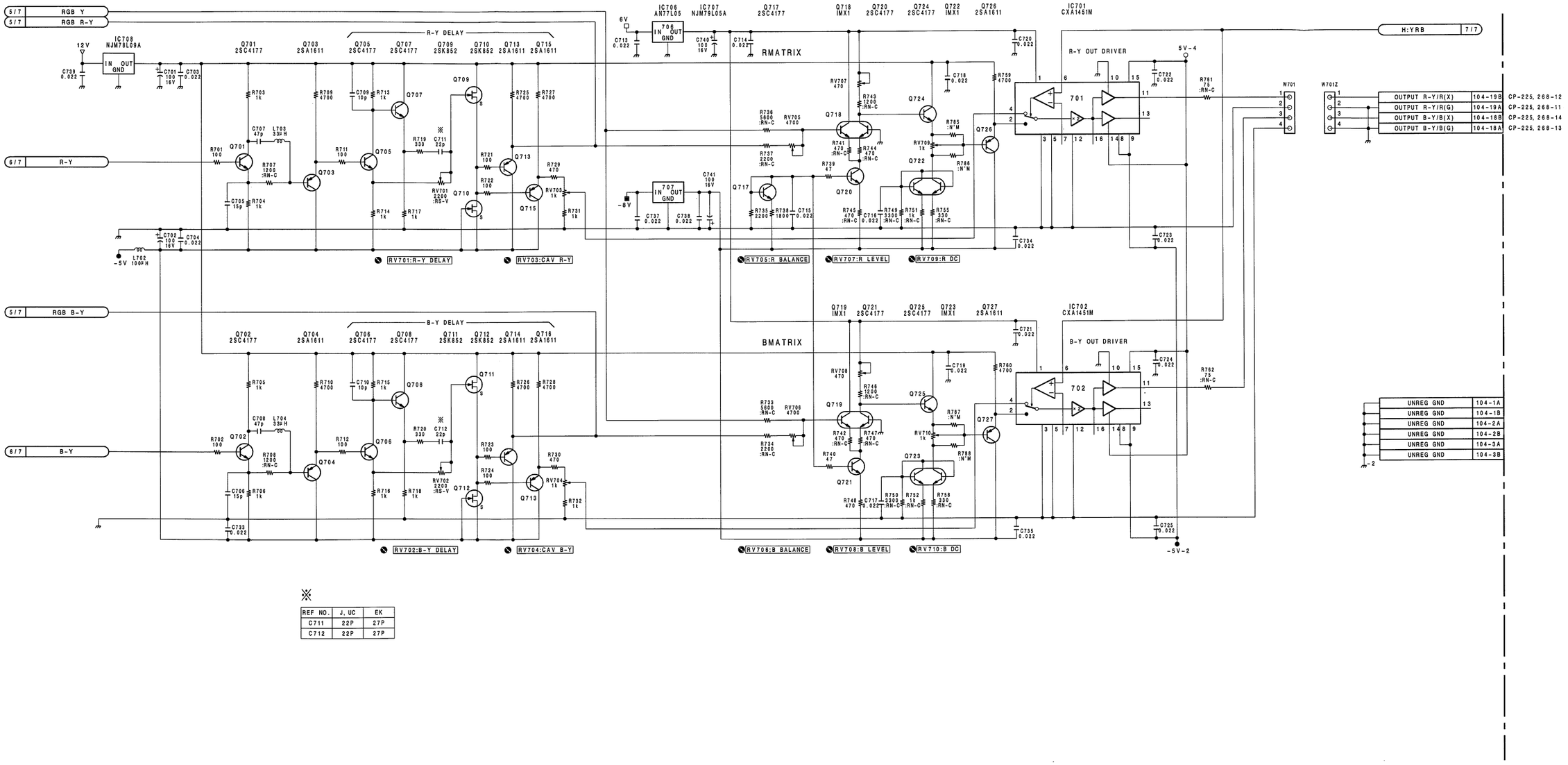

※

REF NO.	J, UC	EK
C711	22P	27P
C712	22P	27P

16-88

VP-44/44A/44P/44AP (7/7)

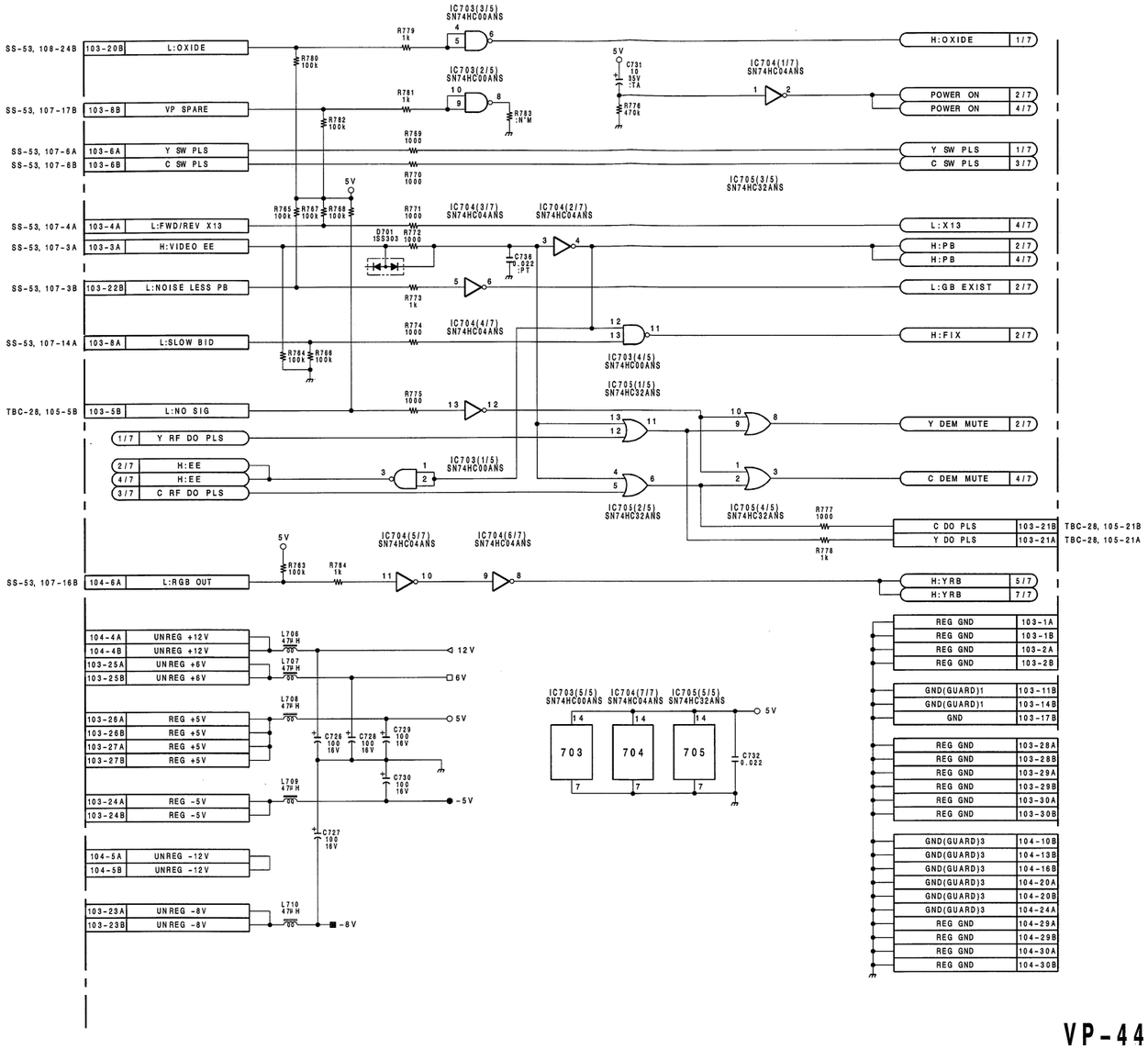

VP-44/44A
VP-44P/44AP BOARD (7/7)

BOARD NO. 1-648-900-11, 12, 13
UVW-1400 (J) ;#10001-
UVW-1400 (UC) ;#10001-
UVW-1400P (EK) ;#10001-
UVW-1200 (J) ;#10001-
UVW-1200 (UC) ;#10001-
UVW-1200P (EK) ;#10001-

VRA-5A/5AP(1-648-898-22)

CN101	N-6	IC502	R-5	✱Q316	F-5	RV702	B-4		
CN102	C-6	IC601	L-4	✱Q317	F-5	RV703	C-4		
		IC602	M-4	✱Q318	E-5				
CV301	F-5	IC701	A-4	✱Q319	K-3	S201	H-4		
		IC702	A-5	✱Q320	J-3				
✱D101	B-3	IC703	H-2	✱Q321	J-4	TH201	N M-1		
✱D102	C-3	IC704	F-4	✱Q322	J-4				
✱D109	D-4	IC705	G-4	✱Q323	J-4	TP101	A-3		
✱D202	H-4	IC706	G-4	✱Q324	F-4	TP201	C-2		
✱D301	E-3	IC707	G-4	✱Q325	F-4	TP202	C-1		
✱D302	P E-5	IC801	N D-3	✱Q508	N-2	TP301	E-3		
✱D303	F-4	IC802	N D-2	✱Q509	P-2	TP302	E-4		
D305	F-5	IC901	K-6	✱Q510	R-4	TP303	H-1		
D306	J-3	IC902	G-6	✱Q511	N-3	TP304	L-5		
✱D701	A-4	IC903	J-6	✱Q512	P-4	TP305	K-4		
D801	N A-2	IC904	E-6	✱Q513	P-4	TP306	J-4		
				✱Q514	P-4	TP307	J-5		
E101	B-4	LV301	E-4	✱Q515	P-4	TP308	N-5		
E201	E-2			✱Q516	N-4	TP309	N-5		
E301	K-3	✱Q101	A-3	✱Q517	N-4	TP310	F-5		
E302	D-3	Q102	A-5	✱Q518	P-4	TP501	R-4		
E303	H-1	✱Q103	A-3	✱Q519	P-5	TP502	P-1		
E501	R-5	Q104	A-4	✱Q520	P-5	TP503	P-5		
E502	N-1	✱Q105	A-3	✱Q601	L-2	TP504	N-4		
E601	M-1	✱Q106	A-3	✱Q602	M-2	TP601	N-4		
		Q107	A-3	✱Q603	N-4	TP602	M-1		
FB201	K-2	✱Q108	A-1	✱Q604	M-4	TP603	P-5		
		✱Q109	B-2	✱Q605	M-4				
FL101	A-2	✱Q110	B-2	✱Q606	L-4	X301	F-4		
FL102	B-3	✱Q111	B-1	✱Q607	M-4	X302	H-4		
FL103	C-3	✱Q112	C-1	✱Q608	L-4				
FL201	R-2	✱Q113	C-2	✱Q609	M-5				
FL202	N-2	✱Q114	B-4	✱Q610	M-5				
		✱Q115	B-4	Q701	A-6				
IC101	A-3	✱Q116	B-3	Q702	A-5				
IC102	C-2	✱Q117	B-3	✱Q703	B-5				
IC103	D-4	✱Q118	B-3	Q704	B-5				
IC104	G-5	✱Q119	B-3	✱Q705	B-5				
IC201	A-1	✱Q120	B-2	✱Q706	B-5				
IC202	B-1	✱Q121	C-4	✱Q707	B-4				
IC203	A-1	✱Q122	C-4	✱Q708	C-5				
IC205	D-2	✱Q123	C-4	Q709	C-5				
IC206	D-1	✱Q124	C-3	✱Q710	C-5				
IC207	H-1	✱Q125	C-3	✱Q711	C-5				
IC208	E-1	✱Q126	C-3	✱Q712	C-4				
IC209	E-2	✱Q127	C-3	Q713	A-5				
IC210	G-2	✱Q128	C-3	Q714	A-5				
IC211	H-1	✱Q129	C-2	✱Q715	A-6				
IC212	J-2	✱Q130	C-2	✱Q716	A-6				
IC213	P-1	✱Q131	B-5	✱Q717	A-4				
IC214	M-2	✱Q132	C-5	Q801	N A-2				
IC215	P-2	✱Q133	A-2	Q802	N A-2				
IC216	K-2	✱Q201	C-1	Q803	N A-2				
IC217	N K-1	✱Q202	H-1	Q804	N D-3				
IC218	K-2	✱Q203	H-4						
IC219	N J-1	✱Q204	P-2	RV101	B-2				
IC220	M-2	✱Q207	R-2	RV102	B-3				
IC301	E-4	✱Q209	N-2	RV103	C-4				
IC302	H-3	✱Q210	R-2	RV104	C-3				
IC303	E-5	✱Q211	K-2	RV105	A-2				
IC304	E-5	✱Q212	R-1	RV201	P-1				
IC305	F-4	✱Q213	M-3	RV202	N-1				
IC306	K-4	✱Q301	D-3	RV203	M-1				
IC307	F-3	✱Q303	E-3	RV301	E-3				
IC308	J-3	✱Q305	E-3	RV302	K-1				
IC309	J-3	✱Q306	E-3	RV303	L-1				
IC310	G-3	✱Q307	E-3	RV304	L-1				
IC311	J-4	✱Q308	J-4	RV305	L-1				
IC312	L-2	✱Q309	J-4	RV306	K-5				
IC313	G-5	✱Q310	F-3	RV501	R-1				
IC314	L-1	✱Q311	F-3	RV502	R-4				
IC315	K-5	✱Q312	K-3	RV503	R-4				
IC316	H-4	✱Q313	E-4	RV602	M-4				
IC317	F-3	✱Q314	E-4	RV603	M-4				
IC501	P-4	✱Q315	J-3	RV701	A-4				

✱ : B SIDE
N : UVW-1400/1200 ONLY
P : UVW-1400P/1200P ONLY

For J,UC

① TP101 REC/EE
(COMPOSITE)

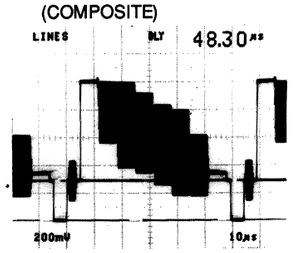

① TP101 REC/EE
(COMPONENT)

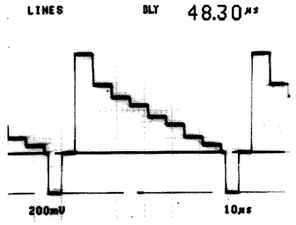

For EK

① TP101 REC/EE
(COMPOSITE)

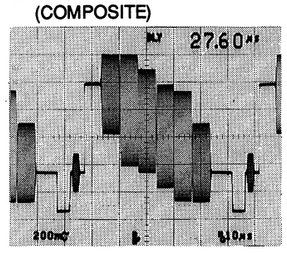

① TP101 REC/EE
(COMPONENT)

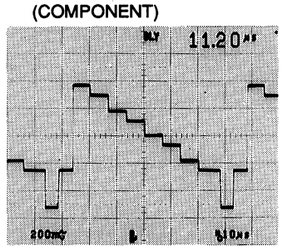

VRA-5A/5AP (1/4)

VRA-5A/5AP(1/4);INPUT PROCESS

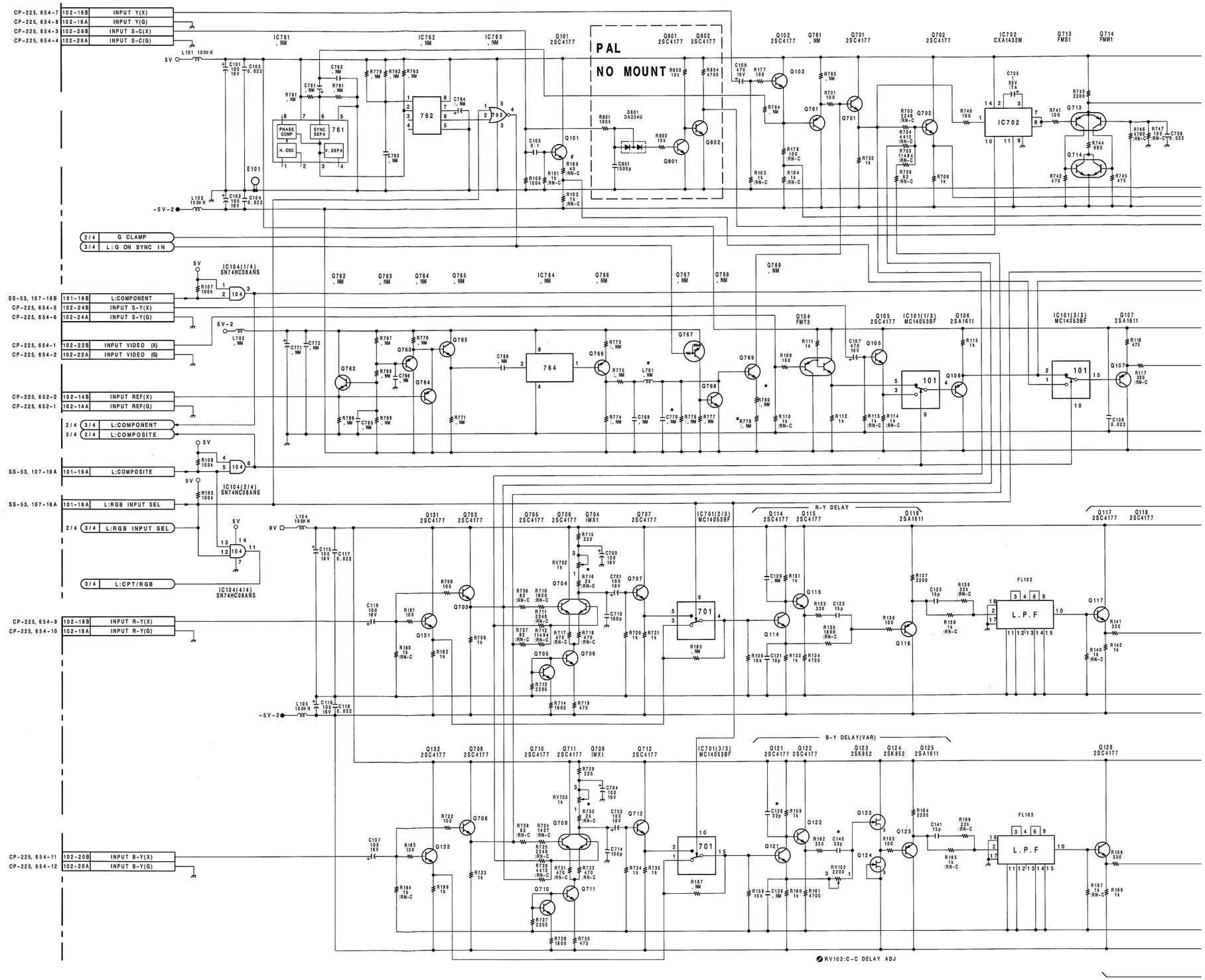
CP-225, 654-7 102-16B INPUT Y(X)
CP-225, 654-8 102-16A INPUT Y(G)
CP-225, 654-3 102-26B INPUT S-C(X)
CP-225, 654-4 102-26A INPUT S-C(G)
PAL
NO MOUNT
2/4 G CLAMP
3/4 L:G ON SYNC IN
SS-53, 107-19B 101-19B L:COMPONENT
CP-225, 654-5 102-24B INPUT S-Y(X)
CP-225, 654-6 102-24A INPUT S-Y(G)
CP-225, 654-1 102-22B INPUT VIDEO (X)
CP-225, 654-2 102-22A INPUT VIDEO (G)
CP-225, 652-2 102-14B INPUT REF(X)
CP-225, 652-1 102-14A INPUT REF(G)
2/4 3/4 L:COMPONENT
3/4 2/4 L:COMPOSITE
SS-53, 107-19A 101-19A L:COMPOSITE
SS-53, 107-16A 101-18A L:RGB INPUT SEL
2/4 3/4 L:RGB INPUT SEL
3/4 L:CPT/RGB
CP-225, 654-9 102-18B INPUT R-Y(X)
CP-225, 654-10 102-18A INPUT R-Y(G)
CP-225, 654-11 102-20B INPUT B-Y(X)
CP-225, 654-12 102-20A INPUT B-Y(G)
R-Y DELAY
B-Y DELAY(VAR)
L.P.F
RV103:C-C DELAY ADJ

16-92

VRA-5A/5AP (1/4)

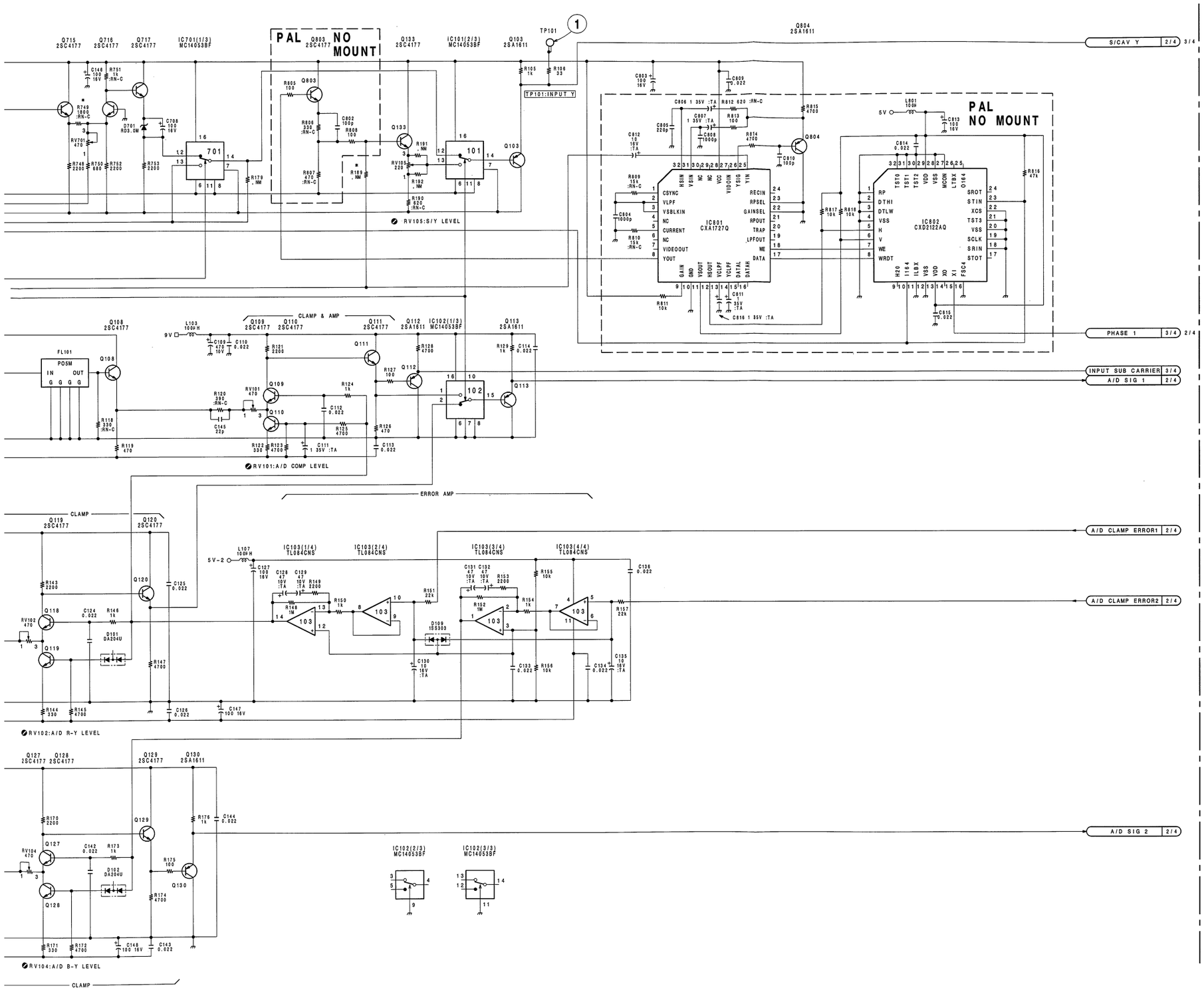

REF NO.	NTSC	PAL
C138	22P	10P
C140	33P	22P
R189	NO MT	100
R716	μ 2K	μ 560
R730	μ 2K	μ 560
R749	μ1800	μ1500

REF NO.	NTSC	PAL
C801	1000P	NO MT
C802	100P	NO MT
C804	1000P	NO MT
C805	220P	NO MT
C806	1/35V	NO MT
C807	1/35V	NO MT
C808	1000P	NO MT
C810	100P	NO MT
C811	1/35V	NO MT
C812	10/16V	NO MT
C813	100/16V	NO MT
C814	0.022	NO MT
C815	0.022	NO MT
C816	1/35V	NO MT
D801	DA204U	NO MT
IC801	CXA1727Q	NO MT
IC802	CXD2122AQ	NO MT
Q801	2SC4177	NO MT
Q802	2SC4177	NO MT
Q803	2SC4177	NO MT
Q804	2SA1611	NO MT
R801	100K	NO MT
R802	10K	NO MT
R803	10K	NO MT
R804	4700	NO MT
R805	100	NO MT
R806	μ 330	NO MT
R807	μ 470	NO MT
R808	100	NO MT
R809	μ 15K	NO MT
R810	μ 15K	NO MT
R811	10K	NO MT
R812	μ 620	NO MT
R813	100	NO MT
R814	4700	NO MT
R815	4700	NO MT
R816	47K	NO MT
R817	10K	NO MT
R818	10K	NO MT
L801	100UH	NO MT

μ =:RN-C

REF NO.	CHANGED INFORMATION	SERIAL NO.
R188	38 → 43	UVW-1400 (J) ;#10421- UVW-1400 (UC);#10291- UVW-1400P(EK);#10041-

VRA-5A/5AP BOARD (1/4)

BOARD NO.1-648-898-22
UVW-1400 (J) ;#10001-
UVW-1400 (UC) ;#10001-
UVW-1400P (EK) ;#10001-

VRA-5A/5AP(1-648-898-22)

CN101		N-6	IC502		R-5	✱Q316		F-5	RV702		B-4
CN102		C-6	IC601		L-4	✱Q317		F-5	RV703		C-4
			IC602		M-4	✱Q318		E-5			
CV301		F-5	IC701		A-4	✱Q319		K-3	S201		H-4
			IC702		A-5	✱Q320		J-3			
✱D101		B-3	IC703		H-2	✱Q321		J-4	TH201	N	M-1
✱D102		C-3	IC704		F-4	✱Q322		J-4			
✱D109		D-4	IC705		G-4	✱Q323		J-4	TP101		A-3
✱D202		H-4	IC706		G-4	✱Q324		F-4	TP201		C-2
✱D301		E-3	IC707		G-4	✱Q325		F-4	TP202		C-1
✱D302	P	E-5	IC801	N	D-3	✱Q508		N-2	TP301		E-3
✱D303		F-4	IC802	N	D-2	✱Q509		P-2	TP302		E-4
D305		F-5	IC901		K-6	✱Q510		R-4	TP303		H-1
D306		J-3	IC902		G-6	✱Q511		N-3	TP304		L-5
✱D701		A-4	IC903		J-6	✱Q512		P-4	TP305		K-4
D801	N	A-2	IC904		E-6	✱Q513		P-4	TP306		J-4
						✱Q514		P-4	TP307		J-5
E101		B-4	LV301		E-4	✱Q515		P-4	TP308		N-5
E201		E-2				✱Q516		N-4	TP309		N-5
E301		K-3	✱Q101		A-3	✱Q517		N-4	TP310		F-5
E302		D-3	Q102		A-5	✱Q518		P-4	TP501		R-4
E303		H-1	✱Q103		A-3	✱Q519		P-5	TP502		P-1
E501		R-5	Q104		A-4	✱Q520		P-5	TP503		P-5
E502		N-1	✱Q105		A-3	✱Q601		L-2	TP504		N-4
E601		M-1	✱Q106		A-3	✱Q602		M-2	TP601		N-4
			Q107		A-3	✱Q603		N-4	TP602		M-1
FB201		K-2	✱Q108		A-1	✱Q604		M-4	TP603		P-5
			✱Q109		B-2	✱Q605		M-4			
FL101		A-2	✱Q110		B-2	✱Q606		L-4	X301		F-4
FL102		B-3	✱Q111		B-1	✱Q607		M-4	X302		H-4
FL103		C-3	✱Q112		C-1	✱Q608		L-4			
FL201		R-2	✱Q113		C-2	✱Q609		M-5			
FL202		N-2	✱Q114		B-4	✱Q610		M-5			
			✱Q115		B-4	Q701		A-6			
IC101		A-3	✱Q116		B-3	Q702		A-5			
IC102		C-2	✱Q117		B-3	✱Q703		B-5			
IC103		D-4	✱Q118		B-3	Q704		B-5			
IC104		G-5	✱Q119		B-3	✱Q705		B-5			
IC201		A-1	✱Q120		B-2	✱Q706		B-5			
IC202		B-1	✱Q121		C-4	✱Q707		B-4			
IC203		A-1	✱Q122		C-4	✱Q708		C-5			
IC205		D-2	✱Q123		C-4	Q709		C-5			
IC206		D-1	✱Q124		C-3	✱Q710		C-5			
IC207		H-1	✱Q125		C-3	✱Q711		C-5			
IC208		E-1	✱Q126		C-3	✱Q712		C-4			
IC209		E-2	✱Q127		C-3	Q713		A-5			
IC210		G-2	✱Q128		C-3	Q714		A-5			
IC211		H-1	✱Q129		C-2	✱Q715		A-6			
IC212		J-2	✱Q130		C-2	✱Q716		A-6			
IC213		P-1	✱Q131		B-5	✱Q717		A-4			
IC214		M-2	✱Q132		C-5	Q801	N	A-2			
IC215		P-2	✱Q133		A-2	Q802	N	A-2			
IC216		K-2	✱Q201		C-1	Q803	N	A-2			
IC217	N	K-1	✱Q202		H-1	Q804	N	D-3			
IC218		K-2	✱Q203		H-4						
IC219	N	J-1	✱Q204		P-2	RV101		B-2			
IC220		M-2	✱Q207		R-2	RV102		B-3			
IC301		E-4	✱Q209		N-2	RV103		C-4			
IC302		H-3	✱Q210		R-2	RV104		C-3			
IC303		E-5	✱Q211		K-2	RV105		A-2			
IC304		E-5	✱Q212		R-1	RV201		P-1			
IC305		F-4	✱Q213		M-3	RV202		N-1			
IC306		K-4	✱Q301		D-3	RV203		M-1			
IC307		F-3	✱Q303		E-3	RV301		E-3			
IC308		J-3	✱Q305		E-3	RV302		K-1			
IC309		J-3	✱Q306		E-3	RV303		L-1			
IC310		G-3	✱Q307		E-3	RV304		L-1			
IC311		J-4	✱Q308		J-4	RV305		L-1			
IC312		L-2	✱Q309		J-4	RV306		K-5			
IC313		G-5	✱Q310		F-3	RV501		R-1			
IC314		L-1	✱Q311		F-3	RV502		R-4			
IC315		K-5	✱Q312		K-3	RV503		R-4			
IC316		H-4	✱Q313		E-4	RV602		M-4			
IC317		F-3	✱Q314		E-4	RV603		M-4			
IC501		P-4	✱Q315		J-3	RV701		A-4			

✱ : B SIDE
N : UVW-1400/1200 ONLY
P : UVW-1400P/1200P ONLY

For J,UC

① TP201 REC/EE (COMPOSITE)

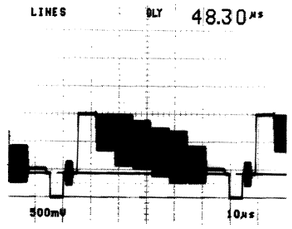

① TP201 REC/EE (COMPONENT)

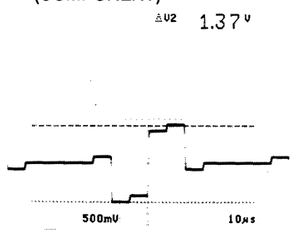

② TP202 REC/EE (COMPONENT)

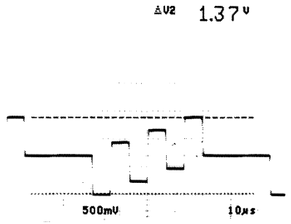

For EK

① TP201 REC/EE (COMPOSITE)

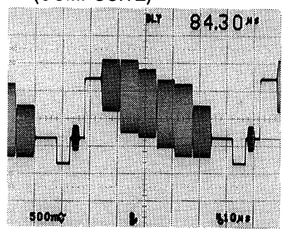

① TP201 REC/EE (COMPONENT)

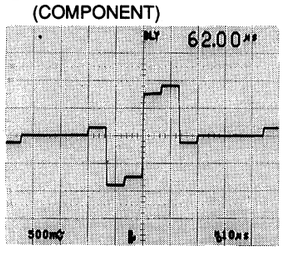

② TP202 REC/EE (COMPONENT)

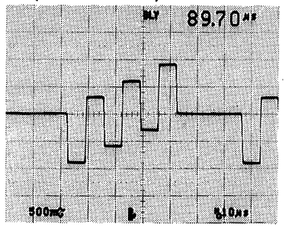

VRA-5A/5AP(2/4);A/D, Y/C SEP., DECODE, CTDM(COMPRESS), D/A

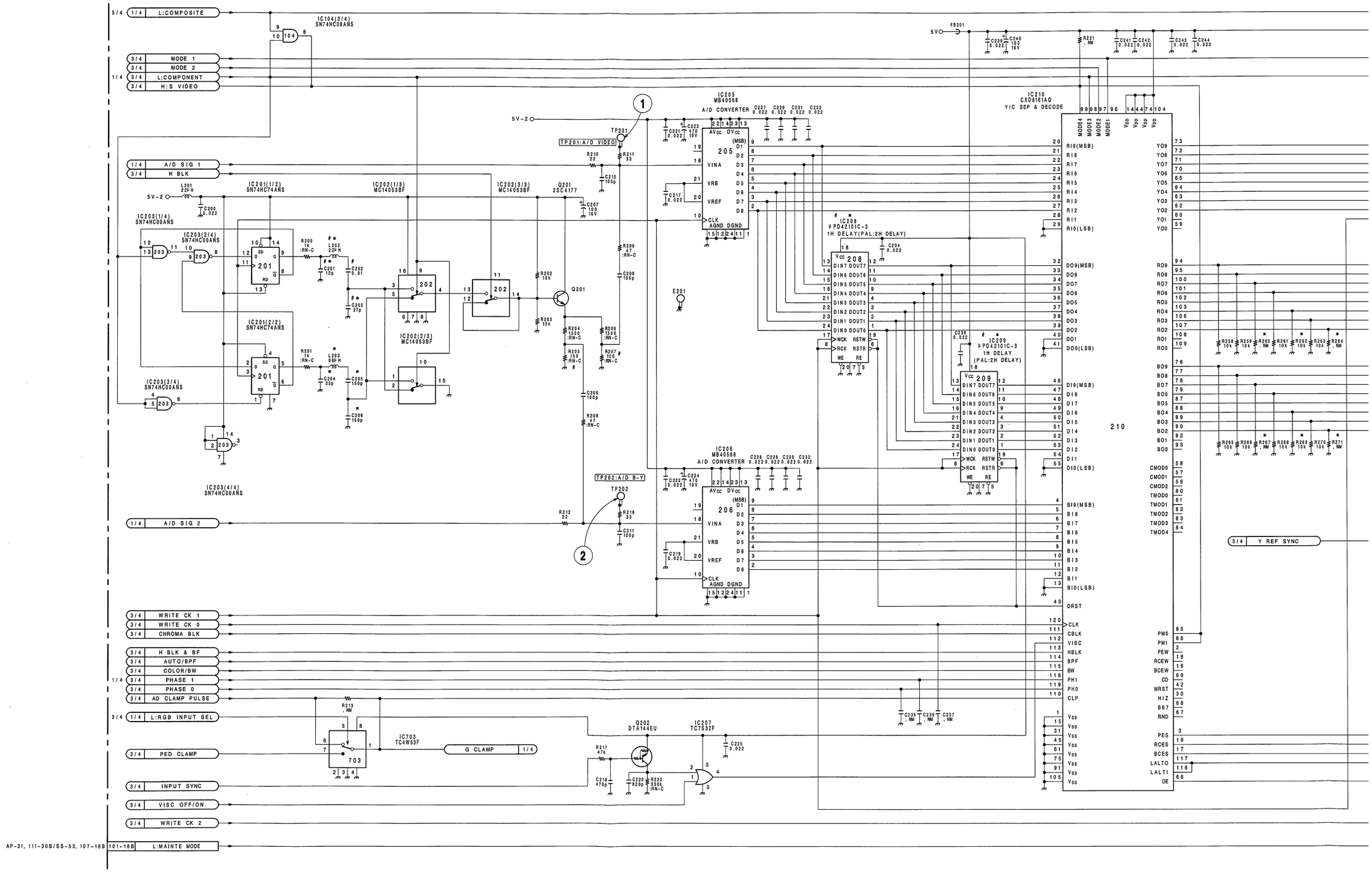

VRA-5A/5AP (2/4)

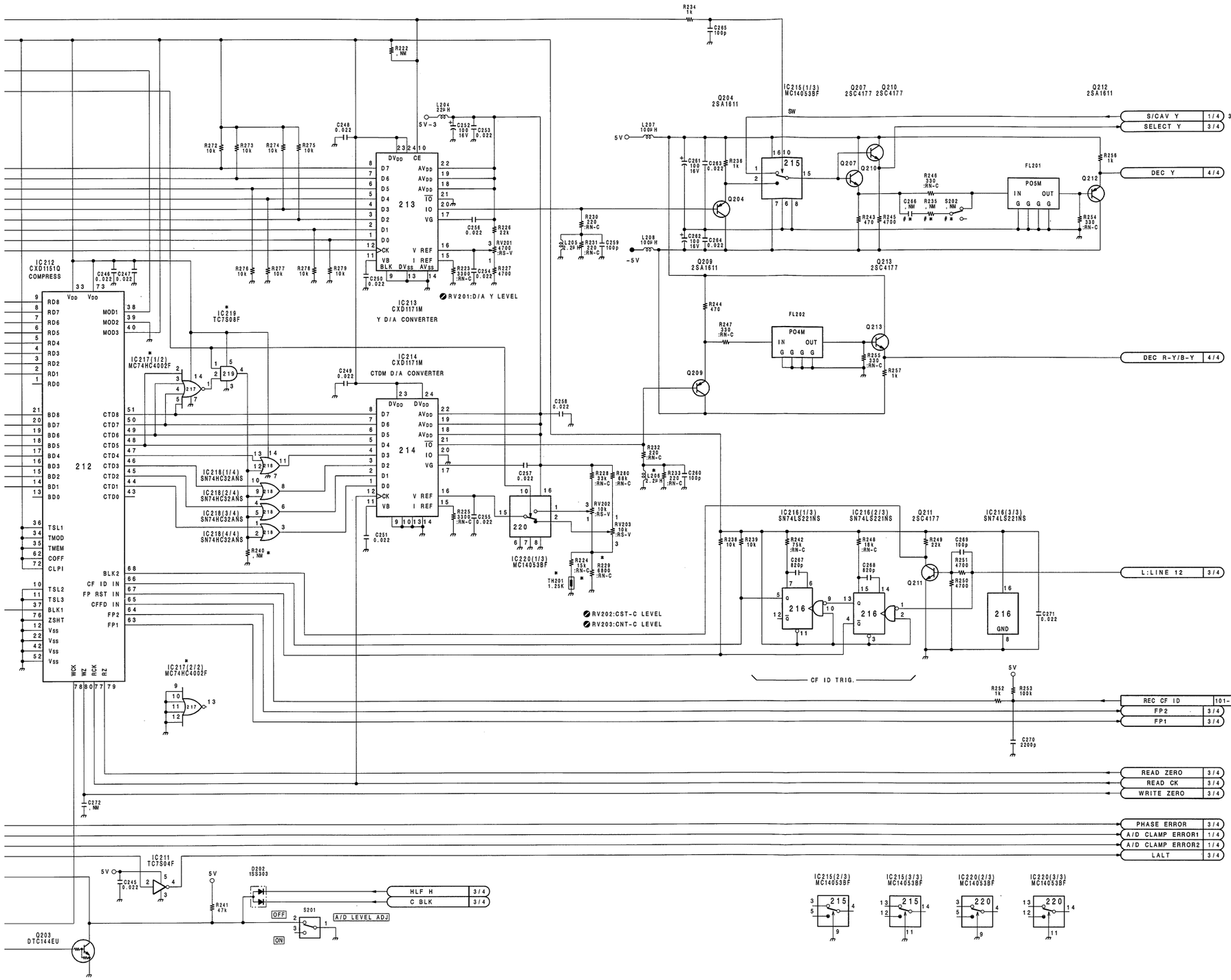

*	NTSC	PAL
C201	12P	NO MT
C203	27P	18P
C204	33P	27P
C205	150P	120P
C206	150P	120P
C266	NO MT	10PF
R224	μ 15K	NO MT
R229	μ 6800	μ 4700
R235	NO MT	4700
R240	NO MT	0
R260	NO MT	10K
R262	10K	NO MT
R264	NO MT	10K
R267	NO MT	10K
R269	10K	NO MT
R271	NO MT	10K
L202	22UH	18UH
L203	68UH	56UH
L206	2.2UH	1.8UH
IC208	UPD42101C-3	UPD485505G-35
IC209	UPD42101C-3	UPD485505G-35
IC217	MC74HC4002F	NO MT
IC219	TC7S08F	NO MT
TH201	1.25K	NO MT
S202	NO MT	1-553-977-11

μ = :RN-C

# REF NO.	CHANGED INFORMATION	SERIAL NO.
R205, 207	150 → 470	UVW-1400P(EK);#10041-
C201	15P → 12P	
C202	68P → 10000P	UVW-1400 (J) ;#10421-
C203	68P → 27P	UVW-1400 (UC);#11141-
L202	33UH → 22UH	
C201	10P → NO MT	
C202	47P → 10000P	
C203	47P → 18P	UVW-1400P(EK);#12451-
L202	22UH → 18UH	
R205, 207	470 → 150	
IC208, 209	μPD42505C-50 → μPD42101C-3	UVW-1400 (J) ;#10421- UVW-1400 (UC);#11141-
C266	NO MT → 10P	
R235	NO MT → 4700	
IC208, 209	μPD42505C-50 → μPD485505G-35	UVW-1400P(EK);#12451-
S202	NO MT → 1-553-977-11	

VRA-5A/5AP BOARD (2/4)

BOARD NO. 1-648-898-22
UVW-1400 (J) ;#10001-
UVW-1400 (UC) ;#10001-
UVW-1400P (EK) ;#10001-

VRA-5A/5AP(1-648-898-22)

CN101		N-6	IC502		R-5	✱Q316		F-5	RV702		B-4
CN102		C-6	IC601		L-4	✱Q317		F-5	RV703		C-4
			IC602		M-4	✱Q318		E-5			
CV301		F-5	IC701		A-4	✱Q319		K-3	S201		H-4
			IC702		A-5	✱Q320		J-3			
✱D101		B-3	IC703		H-2	✱Q321		J-4	TH201	N	M-1
✱D102		C-3	IC704		F-4	✱Q322		J-4			
✱D109		D-4	IC705		G-4	✱Q323		J-4	TP101		A-3
✱D202		H-4	IC706		G-4	✱Q324		F-4	TP201		C-2
✱D301		E-3	IC707		G-4	✱Q325		F-4	TP202		C-1
✱D302	P	E-5	IC801	N	D-3	✱Q508		N-2	TP301		E-3
✱D303		F-4	IC802	N	D-2	✱Q509		P-2	TP302		E-4
D305		F-5	IC901		K-6	✱Q510		R-4	TP303		H-1
D306		J-3	IC902		G-6	✱Q511		N-3	TP304		L-5
✱D701		A-4	IC903		J-6	✱Q512		P-4	TP305		K-4
D801	N	A-2	IC904		E-6	✱Q513		P-4	TP306		J-4
						✱Q514		P-4	TP307		J-5
E101		B-4	LV301		E-4	✱Q515		P-4	TP308		N-5
E201		E-2				✱Q516		N-4	TP309		N-5
E301		K-3	✱Q101		A-3	✱Q517		N-4	TP310		F-5
E302		D-3	Q102		A-5	✱Q518		P-4	TP501		R-4
E303		H-1	✱Q103		A-3	✱Q519		P-5	TP502		P-1
E501		R-5	Q104		A-4	✱Q520		P-5	TP503		P-5
E502		N-1	✱Q105		A-3	✱Q601		L-2	TP504		N-4
E601		M-1	✱Q106		A-3	✱Q602		M-2	TP601		N-4
			Q107		A-3	✱Q603		N-4	TP602		M-1
FB201		K-2	✱Q108		A-1	✱Q604		M-4	TP603		P-5
			✱Q109		B-2	✱Q605		M-4			
FL101		A-2	✱Q110		B-2	✱Q606		L-4	X301		F-4
FL102		B-3	✱Q111		B-1	✱Q607		M-4	X302		H-4
FL103		C-3	✱Q112		C-1	✱Q608		L-4			
FL201		R-2	✱Q113		C-2	✱Q609		M-5			
FL202		N-2	✱Q114		B-4	✱Q610		M-5			
			✱Q115		B-4	Q701		A-6			
IC101		A-3	✱Q116		B-3	Q702		A-5			
IC102		C-2	✱Q117		B-3	✱Q703		B-5			
IC103		D-4	✱Q118		B-3	Q704		B-5			
IC104		G-5	✱Q119		B-3	✱Q705		B-5			
IC201		A-1	✱Q120		B-2	✱Q706		B-5			
IC202		B-1	✱Q121		C-4	✱Q707		B-4			
IC203		A-1	✱Q122		C-4	✱Q708		C-5			
IC205		D-2	✱Q123		C-4	Q709		C-5			
IC206		D-1	✱Q124		C-3	✱Q710		C-5			
IC207		H-1	✱Q125		C-3	✱Q711		C-5			
IC208		E-1	✱Q126		C-3	✱Q712		C-4			
IC209		E-2	✱Q127		C-3	Q713		A-5			
IC210		G-2	✱Q128		C-3	Q714		A-5			
IC211		H-1	✱Q129		C-2	✱Q715		A-6			
IC212		J-2	✱Q130		C-2	✱Q716		A-6			
IC213		P-1	✱Q131		B-5	✱Q717		A-4			
IC214		M-2	✱Q132		C-5	Q801	N	A-2			
IC215		P-2	✱Q133		A-2	Q802	N	A-2			
IC216		K-2	✱Q201		C-1	Q803	N	A-2			
IC217	N	K-1	✱Q202		H-1	Q804	N	D-3			
IC218		K-2	✱Q203		H-4						
IC219	N	J-1	✱Q204		P-2	RV101		B-2			
IC220		M-2	✱Q207		R-2	RV102		B-3			
IC301		E-4	✱Q209		N-2	RV103		C-4			
IC302		H-3	✱Q210		R-2	RV104		C-3			
IC303		E-5	✱Q211		K-2	RV105		A-2			
IC304		E-5	✱Q212		R-1	RV201		P-1			
IC305		F-4	✱Q213		M-3	RV202		N-1			
IC306		K-4	✱Q301		D-3	RV203		M-1			
IC307		F-3	✱Q303		E-3	RV301		E-3			
IC308		J-3	✱Q305		E-3	RV302		K-1			
IC309		J-3	✱Q306		E-3	RV303		L-1			
IC310		G-3	✱Q307		E-3	RV304		L-1			
IC311		J-4	✱Q308		J-4	RV305		L-1			
IC312		L-2	✱Q309		J-4	RV306		K-5			
IC313		G-5	✱Q310		F-3	RV501		R-1			
IC314		L-1	✱Q311		F-3	RV502		R-4			
IC315		K-5	✱Q312		K-3	RV503		R-4			
IC316		H-4	✱Q313		E-4	RV602		M-4			
IC317		F-3	✱Q314		E-4	RV603		M-4			
IC501		P-4	✱Q315		J-3	RV701		A-4			

✱ : B SIDE
N : UVW-1400/1200 ONLY
P : UVW-1400P/1200P ONLY

For J,UC

① TP305 REC/EE

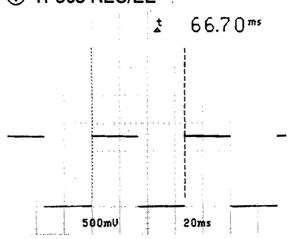

For EK

① TP305 REC/EE

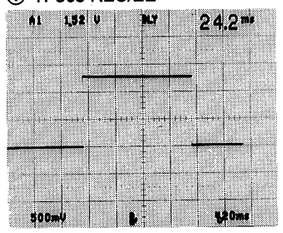

VRA-5A/5AP(3/4);Y/C REF SYNC, TIMING PULSE

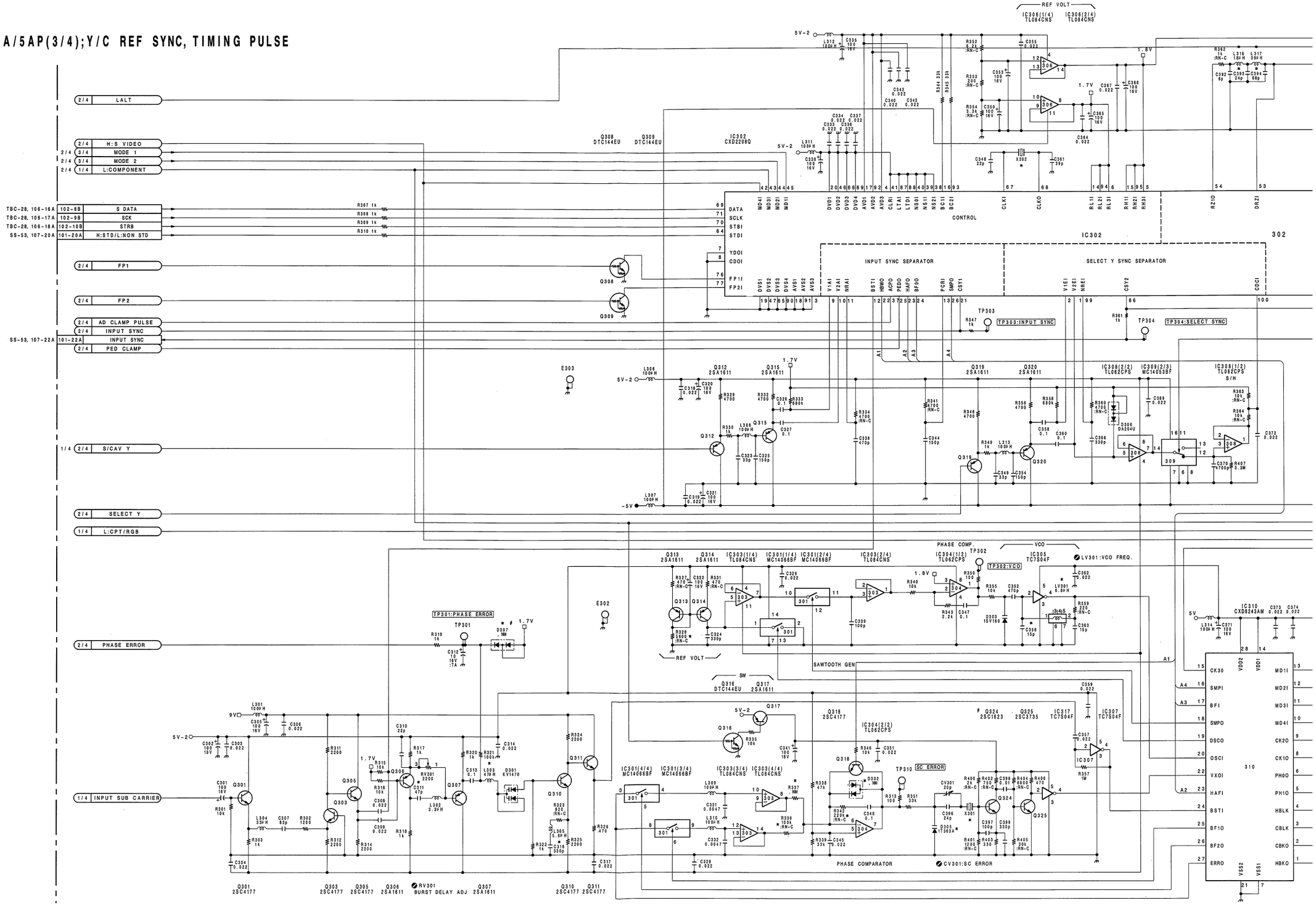

VRA-5A/5AP (3/4)

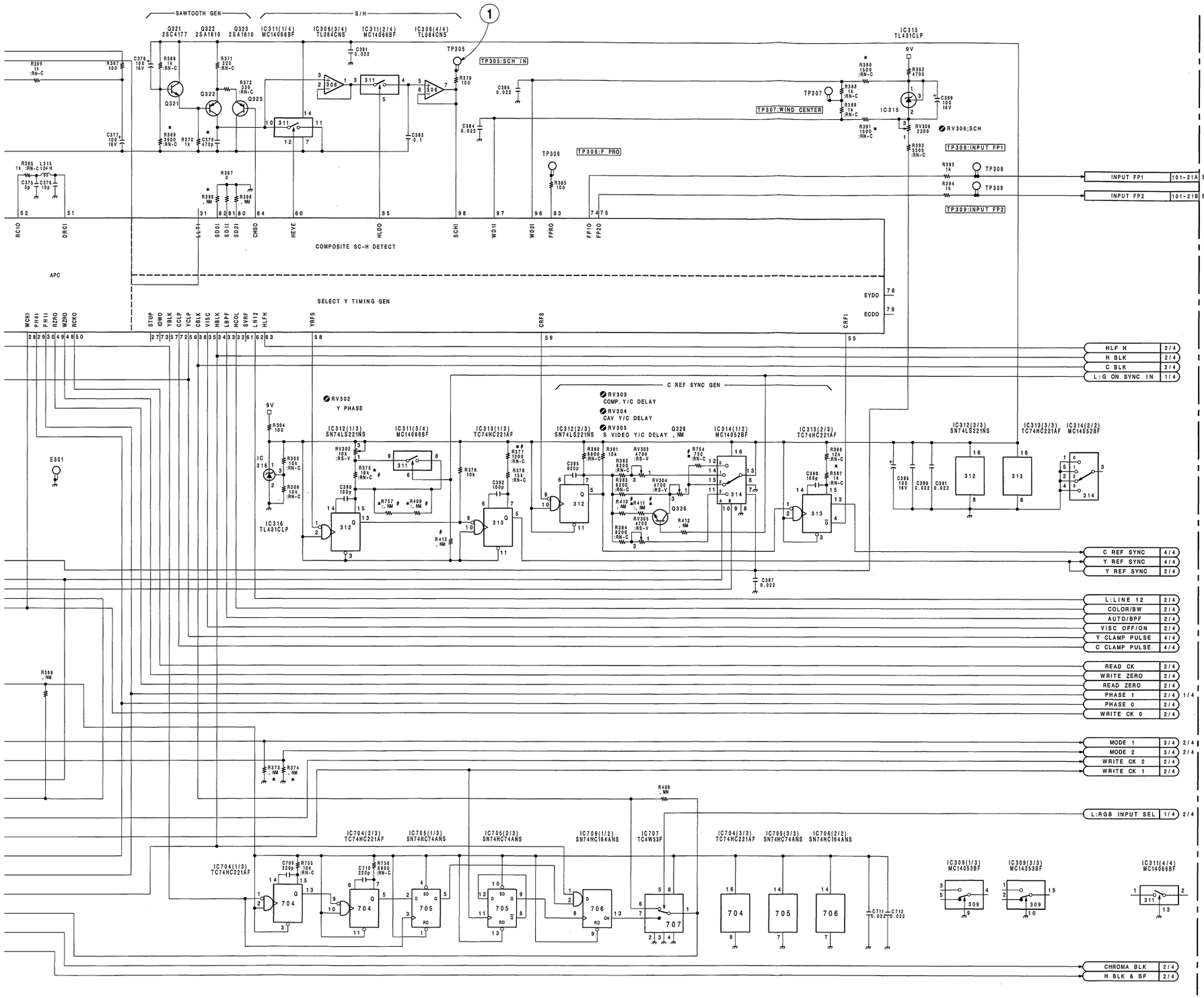

*	NTSC	PAL
C311	47P	22P
C316	330P	220P
C356	15P	6P
C379	470P	390P
C393	24P	18P
C394	68P	39P
R328	μ 5600	μ 4700
R336	μ 100K	μ 330K
R337	NO MT	μ 330K
R342	μ 220K	μ 68K
R369	μ 3900	μ 3300
R373	NO MT	0
R374	NO MT	0
R375	μ 18K	μ 22K
R377	μ 2200	μ 1200
R387	μ 1K	μ 1800
R390	μ 1500	μ 1200
R391	μ 1500	μ 1200
R396	NO MT	0
R409	μ 5100	μ 3600
R410	0	μ 3300
R411	μ 8200	μ 3900
R754	μ 910	μ 750
R757	μ 56K	μ 43K
D302	NO MT	DA204U
D305	1T363A	1T33C
D307	NO MT	DA204U
L303	47UH	33UH
L316	18UH	15UH
L317	39UH	33UH
LV301	6.8UH	5.6UH

μ = :RN-C

*	NTSC	PAL
X301	14.31818MHz 1-527-722-21	17.734475MHz 1-579-057-11
X302	10.738635MHz 1-760-109-21	10.664135MHz 1-760-183-21

# REF NO.	CHANGED INFORMATION	SERIAL NO.
Q324	2SC2715 → 2SC1623	UVW-1400 (J) ;#10421- UVW-1400 (UC);#10501- UVW-1400P(EK);#10791-
R375	18K → 22K	
R377	μ 1200 → μ 2200	
R409	NO MT → μ 5100	
R410	NO MT → 0	UVW-1400 (J) ;#10421-
R411	NO MT → μ 8200	UVW-1400 (UC);#11141-
R754	μ 750 → μ 910	
R757	NO MT → μ 56K	
D305	1T33C → 1T363A	
R409	NO MT → μ 3600	
R410	NO MT → μ 3300	
R411	NO MT → μ 3900	UVW-1400P(EK):#12451-
R757	NO MT → μ 43K	
D307	NO MT → DA204U	
R375	22K → 18K	UVW-1400 (J) ;#10421- UVW-1400 (UC):#11141-
R375	18K → 22K	UVW-1400P(EK):#12451-

VRA-5A/5AP BOARD (3/4)

BOARD NO. 1-648-898-22
UVW-1400 (J) ;#10001-
UVW-1400 (UC) ;#10001-
UVW-1400P (EK) ;#10001-

VRA-5A/5AP (4/4)

VRA-5A/5AP(1-648-898-22)

CN101	N-6	IC502	R-5	✱Q316	F-5	RV702	B-4
CN102	C-6	IC601	L-4	✱Q317	F-5	RV703	C-4
		IC602	M-4	✱Q318	E-5		
CV301	F-5	IC701	A-4	✱Q319	K-3	S201	H-4
		IC702	A-5	✱Q320	J-3		
✱D101	B-3	IC703	H-2	✱Q321	J-4	TH201 N	M-1
✱D102	C-3	IC704	F-4	✱Q322	J-4		
✱D109	D-4	IC705	G-4	✱Q323	J-4	TP101	A-3
✱D202	H-4	IC706	G-4	✱Q324	F-4	TP201	C-2
✱D301	E-3	IC707	G-4	✱Q325	F-4	TP202	C-1
✱D302 P	E-5	IC801 N	D-3	✱Q508	N-2	TP301	E-3
✱D303	F-4	IC802 N	D-2	✱Q509	P-2	TP302	E-4
D305	F-5	IC901	K-6	✱Q510	R-4	TP303	H-1
D306	J-3	IC902	G-6	✱Q511	N-3	TP304	L-5
✱D701	A-4	IC903	J-6	✱Q512	P-4	TP305	K-4
D801 N	A-2	IC904	E-6	✱Q513	P-4	TP306	J-4
				✱Q514	P-4	TP307	J-5
E101	B-4	LV301	E-4	✱Q515	P-4	TP308	N-5
E201	E-2			✱Q516	N-4	TP309	N-5
E301	K-3	✱Q101	A-3	✱Q517	N-4	TP310	F-5
E302	D-3	Q102	A-5	✱Q518	P-4	TP501	R-4
E303	H-1	✱Q103	A-3	✱Q519	P-5	TP502	P-1
E501	R-5	Q104	A-4	✱Q520	P-5	TP503	P-5
E502	N-1	✱Q105	A-3	✱Q601	L-2	TP504	N-4
E601	M-1	✱Q106	A-3	✱Q602	M-2	TP601	N-4
		Q107	A-3	✱Q603	N-4	TP602	M-1
FB201	K-2	✱Q108	A-1	✱Q604	M-4	TP603	P-5
		✱Q109	B-2	✱Q605	M-4		
FL101	A-2	✱Q110	B-2	✱Q606	L-4	X301	F-4
FL102	B-3	✱Q111	B-1	✱Q607	M-4	X302	H-4
FL103	C-3	✱Q112	C-1	✱Q608	L-4		
FL201	R-2	✱Q113	C-2	✱Q609	M-5		
FL202	N-2	✱Q114	B-4	✱Q610	M-5		
		✱Q115	B-4	Q701	A-6		
IC101	A-3	✱Q116	B-3	Q702	A-5		
IC102	C-2	✱Q117	B-3	✱Q703	B-5		
IC103	D-4	✱Q118	B-3	Q704	B-5		
IC104	G-5	✱Q119	B-3	✱Q705	B-5		
IC201	A-1	✱Q120	B-2	✱Q706	B-5		
IC202	B-1	✱Q121	C-4	✱Q707	B-4		
IC203	A-1	✱Q122	C-4	✱Q708	C-5		
IC205	D-2	✱Q123	C-4	Q709	C-5		
IC206	D-1	✱Q124	C-3	✱Q710	C-5		
IC207	H-1	✱Q125	C-3	✱Q711	C-5		
IC208	E-1	✱Q126	C-3	✱Q712	C-4		
IC209	E-2	✱Q127	C-3	Q713	A-5		
IC210	G-2	✱Q128	C-3	Q714	A-5		
IC211	H-1	✱Q129	C-2	✱Q715	A-6		
IC212	J-2	✱Q130	C-2	✱Q716	A-6		
IC213	P-1	✱Q131	B-5	✱Q717	A-4		
IC214	M-2	✱Q132	C-5	Q801 N	A-2		
IC215	P-2	✱Q133	A-2	Q802 N	A-2		
IC216	K-2	✱Q201	C-1	Q803 N	A-2		
IC217 N	K-1	✱Q202	H-1	Q804 N	D-3		
IC218	K-2	✱Q203	H-4				
IC219 N	J-1	✱Q204	P-2	RV101	B-2		
IC220	M-2	✱Q207	R-2	RV102	B-3		
IC301	E-4	✱Q209	N-2	RV103	C-4		
IC302	H-3	✱Q210	R-2	RV104	C-3		
IC303	E-5	✱Q211	K-2	RV105	A-2		
IC304	E-5	✱Q212	R-1	RV201	P-1		
IC305	F-4	✱Q213	M-3	RV202	N-1		
IC306	K-4	✱Q301	D-3	RV203	M-1		
IC307	F-3	✱Q303	E-3	RV301	E-3		
IC308	J-3	✱Q305	E-3	RV302	K-1		
IC309	J-3	✱Q306	E-3	RV303	L-1		
IC310	G-3	✱Q307	E-3	RV304	L-1		
IC311	J-4	✱Q308	J-4	RV305	L-1		
IC312	L-2	✱Q309	J-4	RV306	K-5		
IC313	G-5	✱Q310	F-3	RV501	R-1		
IC314	L-1	✱Q311	F-3	RV502	R-4		
IC315	K-5	✱Q312	K-3	RV503	R-4		
IC316	H-4	✱Q313	E-4	RV602	M-4		
IC317	F-3	✱Q314	E-4	RV603	M-4		
IC501	P-4	✱Q315	J-3	RV701	A-4		

✱ : B SIDE
N : UVW-1400/1200 ONLY
P : UVW-1400P/1200P ONLY

VRA-5A/5AP(4/4);Y/C MOD, Y REC HF

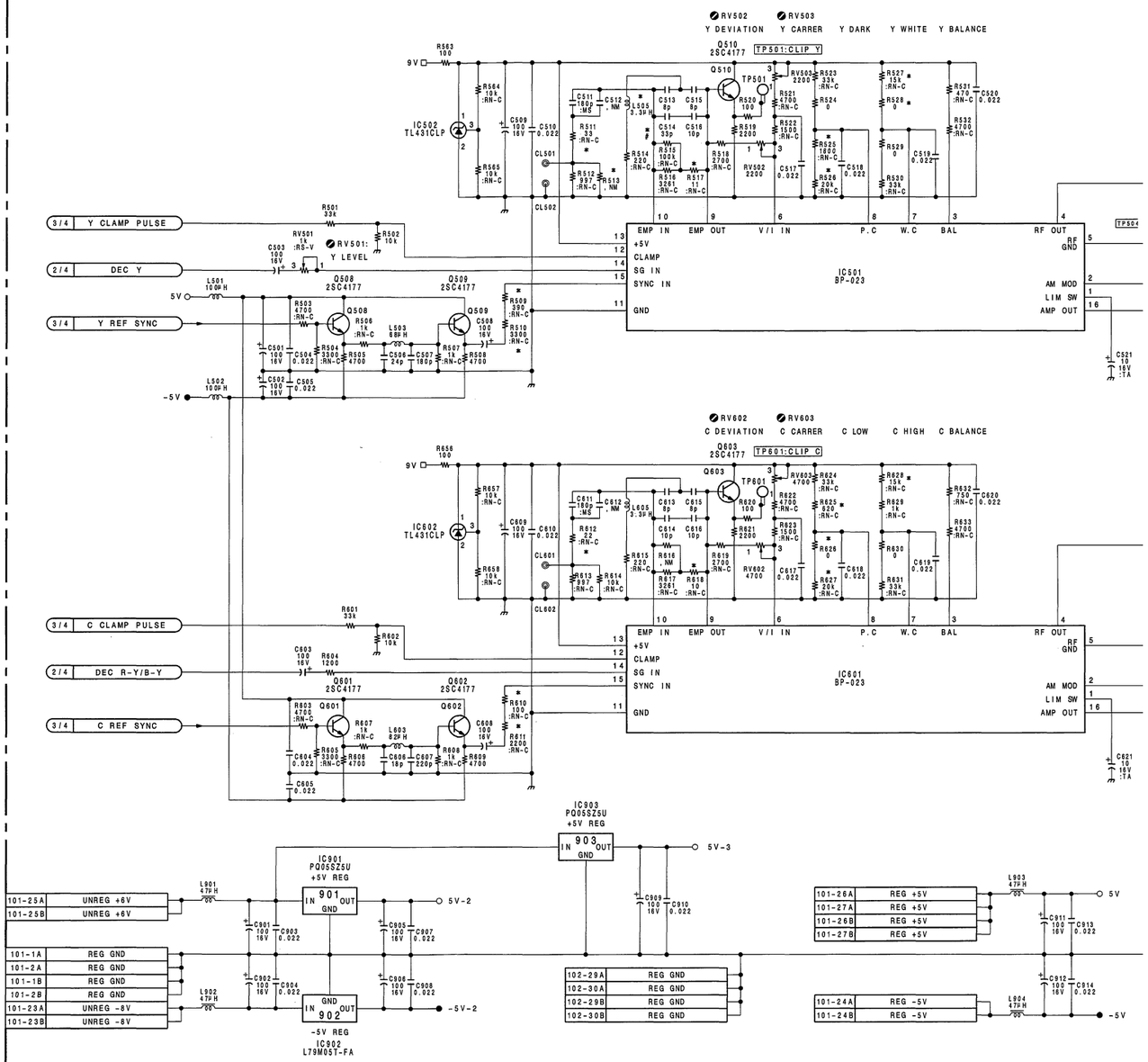

16-102

VRA-5A/5AP (4/4)

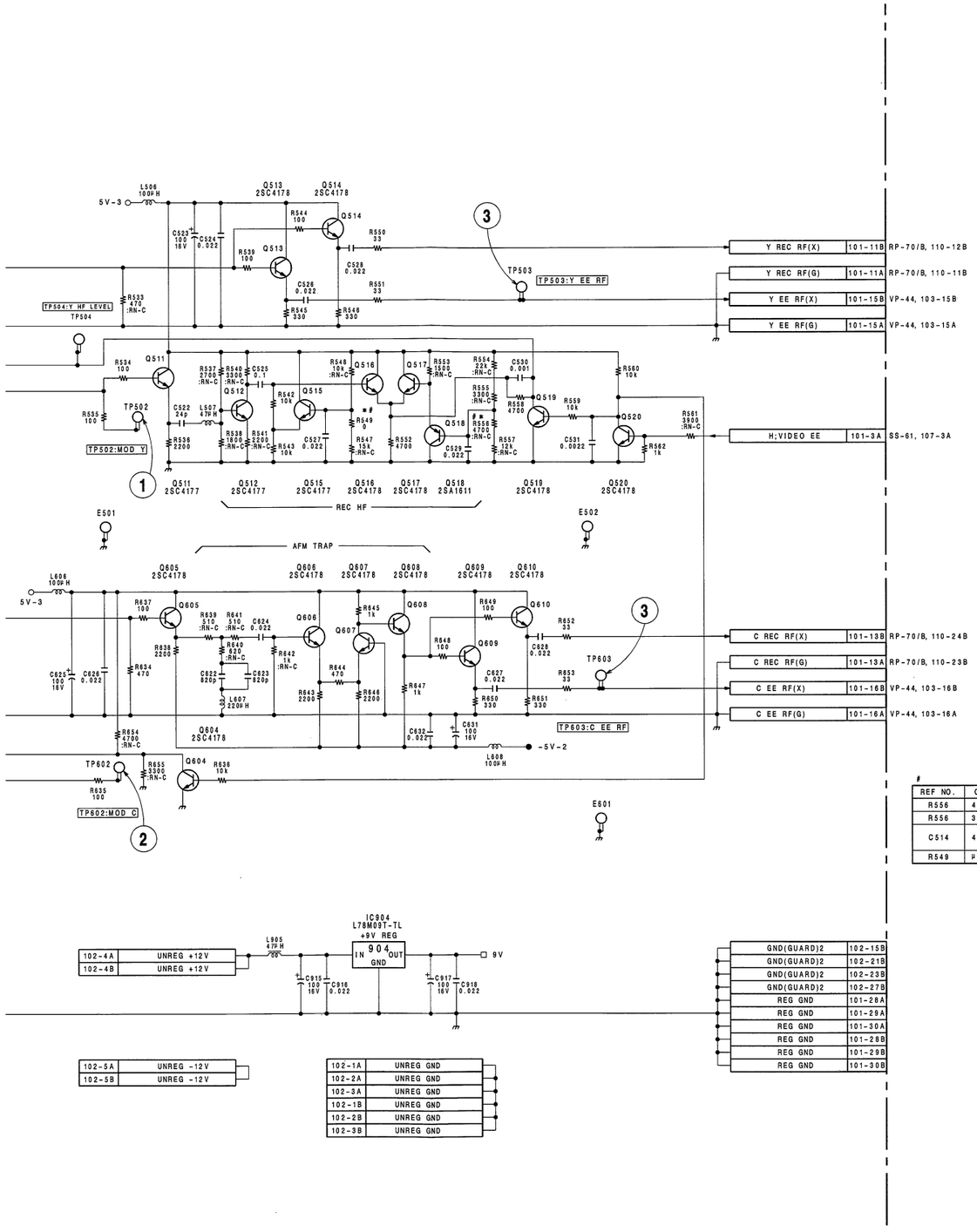

*	NTSC	PAL
C514	33P	22P
R509	μ 390	μ 330
R510	μ 3300	μ 2700
R511	μ 33	0
R513	NO MT	μ 10K
R517	μ 11	μ 15
R525	μ 1800	μ 330
R526	μ 20K	μ 18K
R527	μ 15K	μ 12K
R528	0	μ 750
R549	0	μ 2400
R556	μ 4700	μ 4300
R610	μ 100	μ 220
R611	μ 2200	μ 1K
R612	μ 22	μ 62
R618	μ 10	0
R625	μ 620	0
R626	0	μ 390
R627	μ 20K	μ 18K
R628	μ 15K	μ 12K
L505	3.3UH	6.8UH

μ = :RN-C

#

REF NO.	CHANGED INFORMATION	SERIAL NO.
R556	4700 → 3900	UVW-1400P(EK);#10041-
R556	3900 → 4300	UVW-1400P(EK);#10471-
C514	47P → 33P	UVW-1400 (J) ;#10421- UVW-1400 (UC);#10501-
R549	μ2000 → μ2400	UVW-1400P(EK);#10791-

For J,UC

① TP502 REC/EE

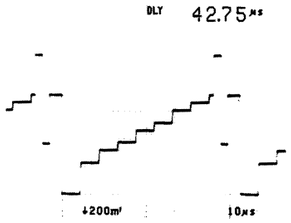

② TP602 REC/EE

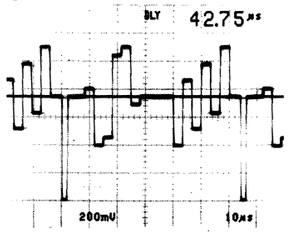

③ TP503 REC/EE
TP603 REC/EE

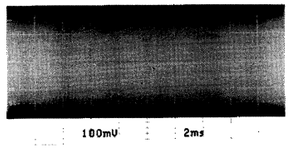

For EK

① TP502 REC/EE

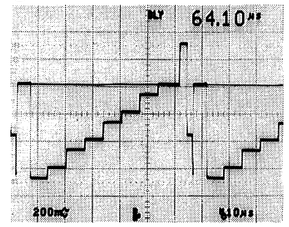

② TP602 REC/EE

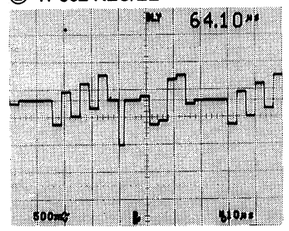

③ TP503 REC/EE
TP603 REC/EE

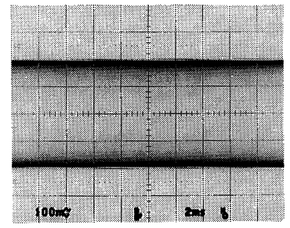

VRA-5A/5AP BOARD (4/4)

BOARD NO. 1-648-898-22
UVW-1400 (J) ;#10001-
UVW-1400 (UC) ;#10001-
UVW-1400P (EK) ;#10001-

SOPS-1045;POWER SUPPLY(SWITCHING REGULATOR)(FOR J,UC)

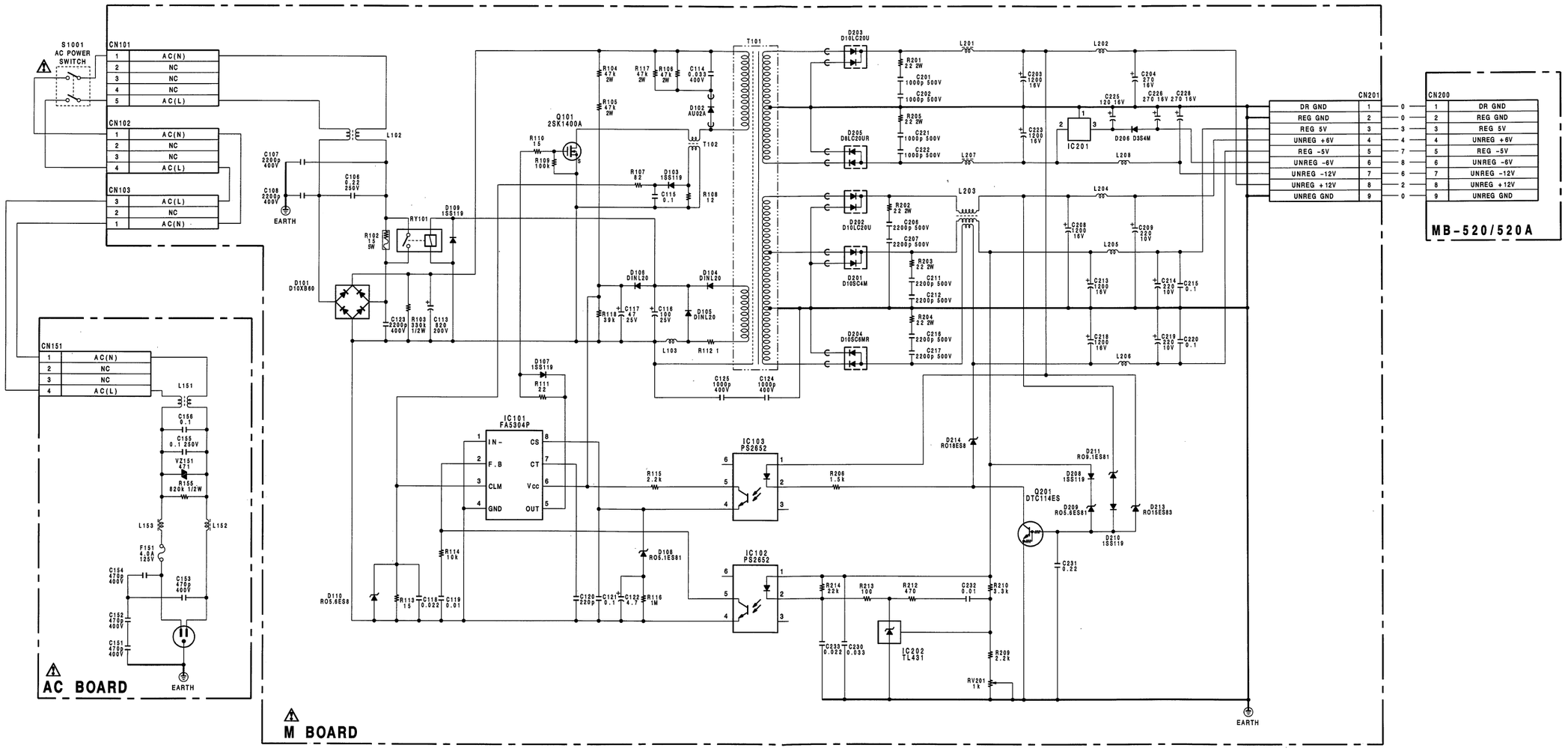

SOPS-1045 BOARD

BOARD NO.1-649-935-11
UVW-1400(J) ;#10001-
UVW-1400(UC);#10001-
UVW-1200(J) ;#10001-
UVW-1200(UC);#10001-

SOPS-1046;POWER SUPPLY(SWITCHING REGULATOR)(FOR EK)

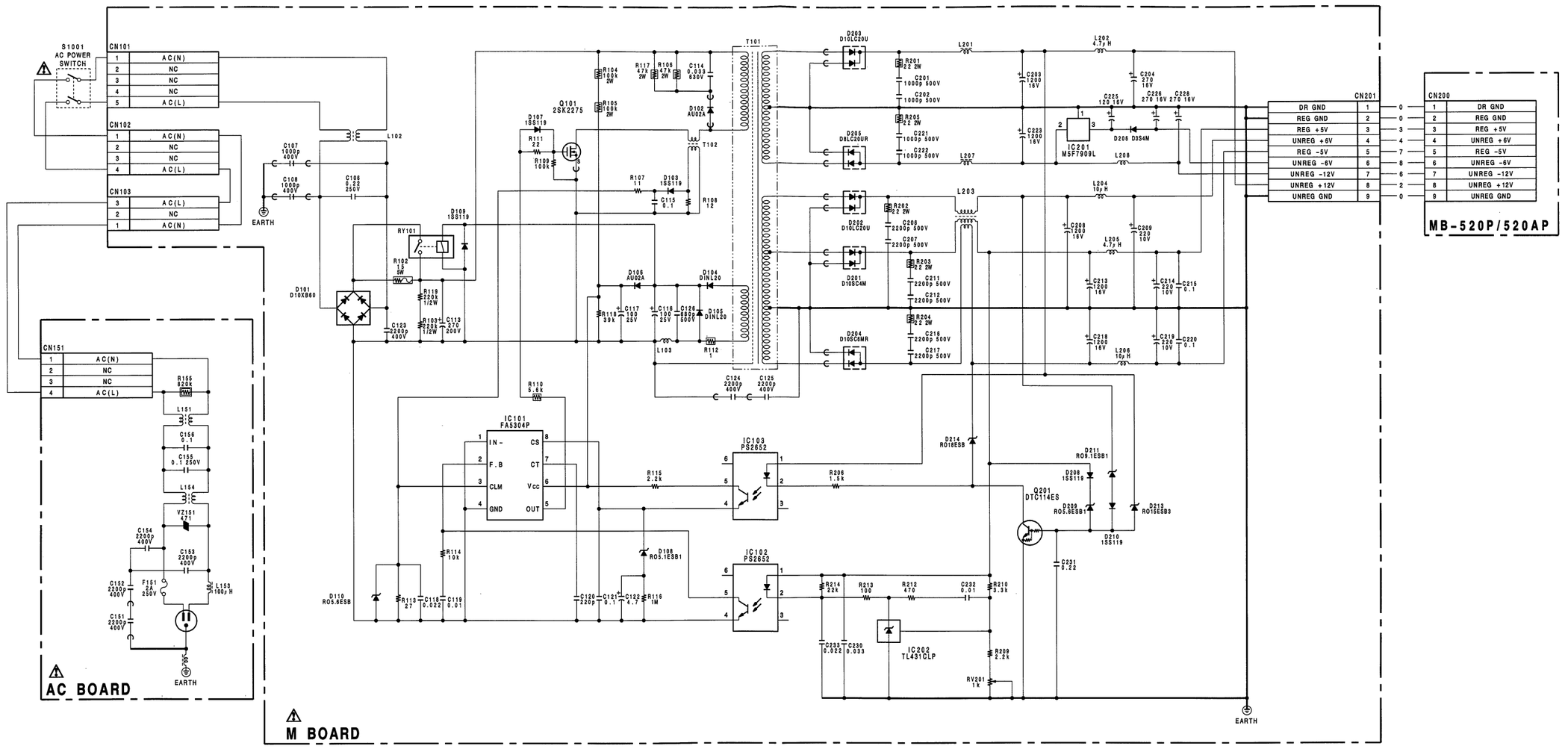

SOPS-1046 BOARD

BOARD NO.1-413-925-12
UVW-1400P(EK);#10001-
UVW-1200P(EK);#10001-

MB-471B(1/2);MOTHER BOARD

RP-70B/70BP

	RP-70B/70BP	CN110		
	A		B	
111-1·2·3	REG GND	1	REG GND	251-1·2
111-1·2·3	REG GND	2	REG GND	251-1·2
111-1·2·3	REG GND	3	REG GND	251-1·2
111-4	REG +5V	4	REG +5V	251-3
111-5	UNREG +6V	5	UNREG +6V	251-4
111-6	REG -5V	6	REG -5V	251-5
111-7	UNREG -8V	7	UNREG -8V	251-6
	NC	8	NC	
281-2	L:Y B REC EN A/V	9	L:Y A REC EN A/V	281-1
	NC	10	GND(GUARD)	
	NC	11	Y REC RF(G)	261-12
	NC	12	Y REC RF(X)	261-11
	NC	13	GND(GUARD)	
	NC	14	Y A PB RF(G)	261-10
	NC	15	Y A PB RF(X)	261-9
	NC	16	GND(GUARD)	
	NC	17	Y B PB RF(G)	261-8
	NC	18	Y B PB RF(X)	261-7
	NC	19	GND(GUARD)	
	NC	20	L:REC CONT	281-3
281-5	L:C B REC EN A/V	21	L:C A REC EN A/V	281-4
	NC	22	GND(GUARD)	
	NC	23	C REC RF(G)	261-6
	NC	24	C REC RF(X)	261-5
	NC	25	GND(GUARD)	
	NC	26	C A PB RF(G)	261-4
	NC	27	C A PB RF(X)	261-3
	NC	28	GND(GUARD)	
	NC	29	C B PB RF(G)	261-2
	NC	30	C B PB RF(X)	261-1
	NC	31	GND(GUARD)	
281-7	L:RE B CONT	32	L:RE A CONT	281-6
	NC	33	NC	
	NC	34	CH-B RE(Y)	NC
	NC	35	CH-B RE(X)	NC
	NC	36	CH-B RE(G)	NC
	NC	37	CH-A RE(G)	NC
	NC	38	CH-A RE(Y)	NC
	NC	39	CH-A RE(X)	NC
	NC	40	NC	
	NC	41	FULL ERASE(G)	265-2
	NC	42	FULL ERASE(Y)	265-1
281-8	H:FULL ERASE ON	43	FULL ERASE(X)	265-3
111-44·45	UNREG -12V	44	UNREG -12V	251-7
111-44·45	UNREG -12V	45	UNREG -12V	251-7
111-46·47	UNREG +12V	46	UNREG +12V	251-8
111-46·47	UNREG +12V	47	UNREG +12V	251-8
111-48·49·50	UNREG GND	48	UNREG GND	251-9
111-48·49·50	UNREG GND	49	UNREG GND	251-9
111-48·49·50	UNREG GND	50	UNREG GND	251-9

AP-31B/31BP

	AP-31B/31BP	CN111		
	A		B	
112-1·2·3	REG GND	1	REG GND	110-1·2·3
112-1·2·3	REG GND	2	REG GND	110-1·2·3
112-1·2·3	REG GND	3	REG GND	110-1·2·3
112-4	REG +5V	4	REG +5V	110-4
112-5	UNREG +6V	5	UNREG +6V	110-5
112-6	REG -5V	6	REG -5V	110-6
112-7	UNREG -8V	7	UNREG -8V	110-7
NC	(REG GND)	8	CH 1 LINE OUT(G)	274-3
274-4	CH 1 LINE OUT(X)	9	CH 1 HP OUT(G)	278-2
NC	(REG GND)	10	CH 1 HP OUT(X)	278-1
278-5	CH 1 HP RET	11	CH 1 HP VOL(G)	278-7
NC	(REG GND)	12	CH 1 HP VOL(X)	278-6
112-15A	CH 1 REC VOL(G)	13	CH 1 METER OUT	277-1
NC	(REG GND)	14	CH 1 REC RET	276-5
112-18B	CH 1 ENC(X)	15	CH 1 ENC(G)	112-17A
NC	(REG GND)	16	(REG GND)	NC
281-25	PB LTC	17	LTC EQ(X)	281-24
NC	(REG GND)	18	(REG GND)	NC
112-19B	LTC REC I(G)	19	LTC REC I(X)	112-20B
NC	(REG GND)	20	LTC REC I(G)	112-21B
112-30B	CH 2 INSERT CROSSTALK	21	CH 1 INSERT CROSSTALK	112-10B
NC	(REG GND)	22	H:CTL CUT	281-22
281-21	L:AU CH 1 HEAD REC	23	L:AU CH 1 PB MUTE	281-20
NC	(REG GND)	24	L:AU CH 2 PB MUTE	281-19
281-18	L:AU CH 2 HEAD REC	25	L:AU CH 1 PB	281-17
NC	(REG GND)	26	L:AU CH 2 PB	281-16
112-27B, 281-15	H:LTC PB	27	L:AUDIO ATT ON	281-14
NC	(REG GND)	28	L:SLOW EQ ON	281-13
112-29B	H:BIAS ON	29	H:NR ON	281-12
NC	(REG GND)	30	L:MAINTE MODE	281-11
NC	(REG GND)	31	CH 1 REC HEAD(X)	112-41B
NC	(REG GND)	32	CH 1 REC HEAD(G)	111-33A
112-41A	CH 1 REC HEAD(G)	33	CH 2 REC HEAD(X)	112-43A
274-2	MONI OUT(X)	34	CH 2 REC HEAD(G)	112-42B
NC	(REG GND)	35	MONI OUT(G)	274-1
112-32B	CH 2 ENC(X)	36	(REG GND)	NC
112-33A	CH 2 ENC(G)	37	CH 2 REC RET	276-2
NC	(REG GND)	38	CH 2 REC VOL(G)	112-35A
277-2	CH 2 METER OUT	39	CH 2 HP VOL(X)	278-8
NC	(REG GND)	40	CH 2 HP VOL(G)	278-10
278-9	CH 2 HP RET	41	CH 2 HP OUT(X)	278-3
NC	(REG GND)	42	CH 2 HP OUT(G)	278-4
274-6	CH 2 LINE OUT(X)	43	CH 2 LINE OUT(G)	274-5
112-44·45	UNREG -12V	44	UNREG -12V	110-44·45
112-44·45	UNREG -12V	45	UNREG -12V	110-44·45
112-46·47	UNREG +12V	46	UNREG +12V	110-46·47
112-46·47	UNREG +12V	47	UNREG +12V	110-46·47
112-48·49·50, 277-3	UNREG GND	48	UNREG GND	110-48·49·50
112-48·49·50, 277-3	UNREG GND	49	UNREG GND	110-48·49·50
112-48·49·50, 277-3	UNREG GND	50	UNREG GND	110-48·49·50

CN251		
MB-520, 201-1	1	REG GND
MB-520, 201-2	2	REG GND
MB-520, 201-3	3	REG +5V
MB-520, 201-4	4	UNREG +6V
MB-520, 201-5	5	REG -5V
MB-520, 201-6	6	UNREG -8V
MB-520, 201-7	7	UNREG -12V
MB-520, 201-8	8	UNREG +12V
MB-520, 201-9	9	UNREG GND

CN261		
MB-520, 211-1	1	C B PB RF(X)
MB-520, 211-2	2	C B PB RF(G)
MB-520, 211-3	3	C A PB RF(X)
MB-520, 211-4	4	C A PB RF(G)
MB-520, 211-5	5	C REC RF(X)
MB-520, 211-6	6	C REC RF(G)
MB-520, 211-7	7	Y B PB RF(X)
MB-520, 211-8	8	Y B PB RF(G)
MB-520, 211-9	9	Y A PB RF(X)
MB-520, 211-10	10	Y A PB RF(G)
MB-520, 211-11	11	Y REC RF(X)
MB-520, 211-12	12	Y REC RF(G)

CN263		
DEW SENSOR	1	DEW DET(X)
DEW SENSOR	2	DEW DET(G)

CN265		
FULL ERASE HEAD	1	FULL ERASE(Y)
FULL ERASE HEAD	2	FULL ERASE(G)
FULL ERASE HEAD	3	FULL ERASE(X)

CN274		
CP-226, 274-1	1	MONI OUT(G)
CP-226, 274-2	2	MONI OUT(X)
CP-226, 274-3	3	CH 1 LINE OUT(G)
CP-226, 274-4	4	CH 1 LINE OUT(X)
CP-226, 274-5	5	CH 2 LINE OUT(G)
CP-226, 274-6	6	CH 2 LINE OUT(X)
CP-226, 274-7	7	NC

CN275		
CP-226, 275-1	1	AU CH 1 INPUT(G)
CP-226, 275-2	2	AU CH 1 INPUT(Y)
CP-226, 275-3	3	AU CH 1 INPUT(X)
CP-226, 275-4	4	AU CH 2 INPUT(G)
CP-226, 275-5	5	AU CH 2 INPUT(Y)
CP-226, 275-6	6	AU CH 2 INPUT(X)

CN276		
VR-155, 402-1	1	CH 2 REC VOL(X)
VR-155, 402-2	2	CH 2 REC RET
VR-155, 402-3	3	CH 2 REC VOL(G)
VR-155, 402-4	4	CH 1 REC VOL(X)
VR-155, 402-5	5	CH 1 REC RET
VR-155, 402-6	6	CH 1 REC VOL(G)

CN277		
KY-290, 592-1	1	CH 1 METER OUT
KY-290, 592-2	2	CH 2 METER OUT
KY-290, 592-3	3	UNREG GND
KY-290, 592-4	4	NC

MB-471B (1/2)

AR-14A/14AP

	AR-14A/14AP A	CN112	B	
	REG GND	1	REG GND	111-1·2·3
	REG GND	2	REG GND	111-1·2·3
	REG GND	3	REG GND	111-1·2·3
	REG +5V	4	REG +5V	111-4
	UNREG +6V	5	UNREG +6V	111-5
	REG -5V	6	REG -5V	111-6
	UNREG -8V	7	UNREG -8V	111-7
NC	(REG GND)	8	(REG GND)	NC
NC	(REG GND)	9	(REG GND)	NC
NC	(REG GND)	10	CH 1 INSERT CROSSTALK	111-21B
NC	(REG GND)	11	(REG GND)	NC
NC	(REG GND)	12	AU CH 1 INPUT(Y)	275-2
275-1	AU CH 1 INPUT(G)	13	(REG GND)	NC
NC	(REG GND)	14	AU CH 1 INPUT(X)	275-3
111-13A, 276-6	CH 1 REC VOL(G)	15	(REG GND)	NC
NC	(REG GND)	16	CH 1 REC VOL(X)	276-4
111-15B	CH 1 ENC(G)	17	(REG GND)	NC
NC	(REG GND)	18	CH 1 ENC(X)	111-15A
NC	(REG GND)	19	LTC REC I(G)	111-19A
NC	(REG GND)	20	LTC REC I(X)	111-19B
NC	(REG GND)	21	LTC REC I(G)	111-20B
NC	(REG GND)	22	(REG GND)	NC
281-33	REC LTC	23	L:LTC ERASE ON	281-34
NC	(REG GND)	24	L:AU CH 2 ERASE ON	281-32
281-30	L:AU CH 2 REC MUTE	25	L:AU CH 1 ERASE ON	281-31
NC	(REG GND)	26	L:AU CH 1 REC MUTE	281-29
281-28	H:OSC OFF	27	H:LTC PB	111-27A
NC	(REG GND)	28	L:AU CH 1 BIAS ON	281-27
281-26	L:AU CH 2 BIAS ON	29	H:BIAS ON	111-29A
NC	(REG GND)	30	CH 2 INSERT CROSSTALK	111-21A
NC	(REG GND)	31	(REG GND)	NC
NC	(REG GND)	32	CH 2 ENC(X)	111-36A
111-37A	CH 2 ENC(G)	33	(REG GND)	NC
NC	(REG GND)	34	CH 2 REC VOL(X)	276-1
111-38B, 276-3	CH 2 REC VOL(G)	35	(REG GND)	NC
NC	(REG GND)	36	AU CH 2 INPUT(X)	275-6
275-4	AU CH 2 INPUT(G)	37	(REG GND)	NC
NC	(REG GND)	38	AU CH 2 INPUT(Y)	275-5
NC	(REG GND)	39	(REG GND)	NC
NC	(REG GND)	40	(REG GND)	NC
111-33A	CH 1 REC HEAD(G)	41	CH 1 REC HEAD(X)	111-31B
NC	(REG GND)	42	CH 2 REC HEAD(G)	111-34B
111-33B	CH 2 REC HEAD(X)	43	(REG GND)	NC
	UNREG -12V	44	UNREG -12V	111-44·45
	UNREG -12V	45	UNREG -12V	111-44·45
	UNREG +12V	46	UNREG +12V	111-46·47
	UNREG +12V	47	UNREG +12V	111-46·47
	UNREG GND	48	UNREG GND	111-48·49·50
	UNREG GND	49	UNREG GND	111-48·49·50
	UNREG GND	50	UNREG GND	111-48·49·50

12V — UNREG +12V
6V — UNREG +6V
5V — REG +5V
UNREG -12V — -12V
UNREG -8V — -8V
REG -5V — -5V
REG GND
UNREG GND — -2

CN278			
HP-61, 401-1	1	CH 1 HP OUT(X)	111-10B
HP-61, 401-2	2	CH 1 HP OUT(G)	111-9B
HP-61, 401-3	3	CH 2 HP OUT(X)	111-41B
HP-61, 401-4	4	CH 2 HP OUT(G)	111-42B
HP-61, 401-5	5	CH 1 HP RET	111-11A
HP-61, 401-6	6	CH 1 HP VOL(X)	111-12B
HP-61, 401-7	7	CH 1 HP VOL(G)	111-11B
HP-61, 401-8	8	CH 2 HP VOL(X)	111-39B
HP-61, 401-9	9	CH 2 HP RET	111-41A
HP-61, 401-10	10	CH 2 HP VOL(G)	111-40B

CN281			
MB-520, 231-34	1	L:Y A REC EN A/V	110-9B
MB-520, 231-33	2	L:Y B REC EN A/V	110-9A
MB-520, 231-32	3	L:REC CONT	110-20B
MB-520, 231-31	4	L:C A REC EN A/V	110-21B
MB-520, 231-30	5	L:C B REC EN A/V	110-21A
MB-520, 231-29	6	L:RE A CONT	110-32B
MB-520, 231-28	7	L:RE B CONT	110-32A
MB-520, 231-27	8	H:FULL ERASE ON	110-43A
MB-520, 231-26	9	DEW DET(G)	263-2
MB-520, 231-25	10	DEW DET(X)	263-1
MB-520, 231-24	11	L:MAINTE MODE	111-30B
MB-520, 231-23	12	H:NR ON	111-29B
MB-520, 231-22	13	L:SLOW EQ ON	111-28B
MB-520, 231-21	14	L:AUDIO ATT ON	111-27B
MB-520, 231-20	15	H:LTC PB	111-27A
MB-520, 231-19	16	L:AU CH 2 PB	111-28B
MB-520, 231-18	17	L:AU CH 1 PB	111-25B
MB-520, 231-17	18	L:AU CH 2 HEAD REC	111-25A
MB-520, 231-16	19	L:AU CH 2 PB MUTE	111-24B
MB-520, 231-15	20	L:AU CH 1 PB MUTE	111-23B
MB-520, 231-14	21	L:AU CH 1 HEAD REC	111-23A
MB-520, 231-13	22	H:CTL CUT	111-22B
MB-520, 231-12	23	LTC EQ(G)	(GUARD)
MB-520, 231-11	24	LTC EQ(X)	111-17B
MB-520, 231-10	25	PB LTC	111-17A
MB-520, 231-9	26	L:AU CH 2 BIAS ON	112-29A
MB-520, 231-8	27	L:AU CH 1 BIAS ON	112-28B
MB-520, 231-7	28	H:OSC OFF	112-27A
MB-520, 231-6	29	L:AU CH 1 REC MUTE	112-26B
MB-520, 231-5	30	L:AU CH 2 REC MUTE	112-25A
MB-520, 231-4	31	L:AU CH 1 ERASE ON	112-25B
MB-520, 231-3	32	L:AU CH 2 ERASE ON	112-24B
MB-520, 231-2	33	REC LTC	112-23A
MB-520, 231-1	34	L:LTC ERASE ON	112-23B

MB-471B BOARD (1/2)

BOARD NO. 1-648-919-31, 32
UVW-1400 (J) ;#10001-
UVW-1400 (UC) ;#10001-
UVW-1400P (EK) ;#10001-

MB-471B(2/2);MOTHER BOARD

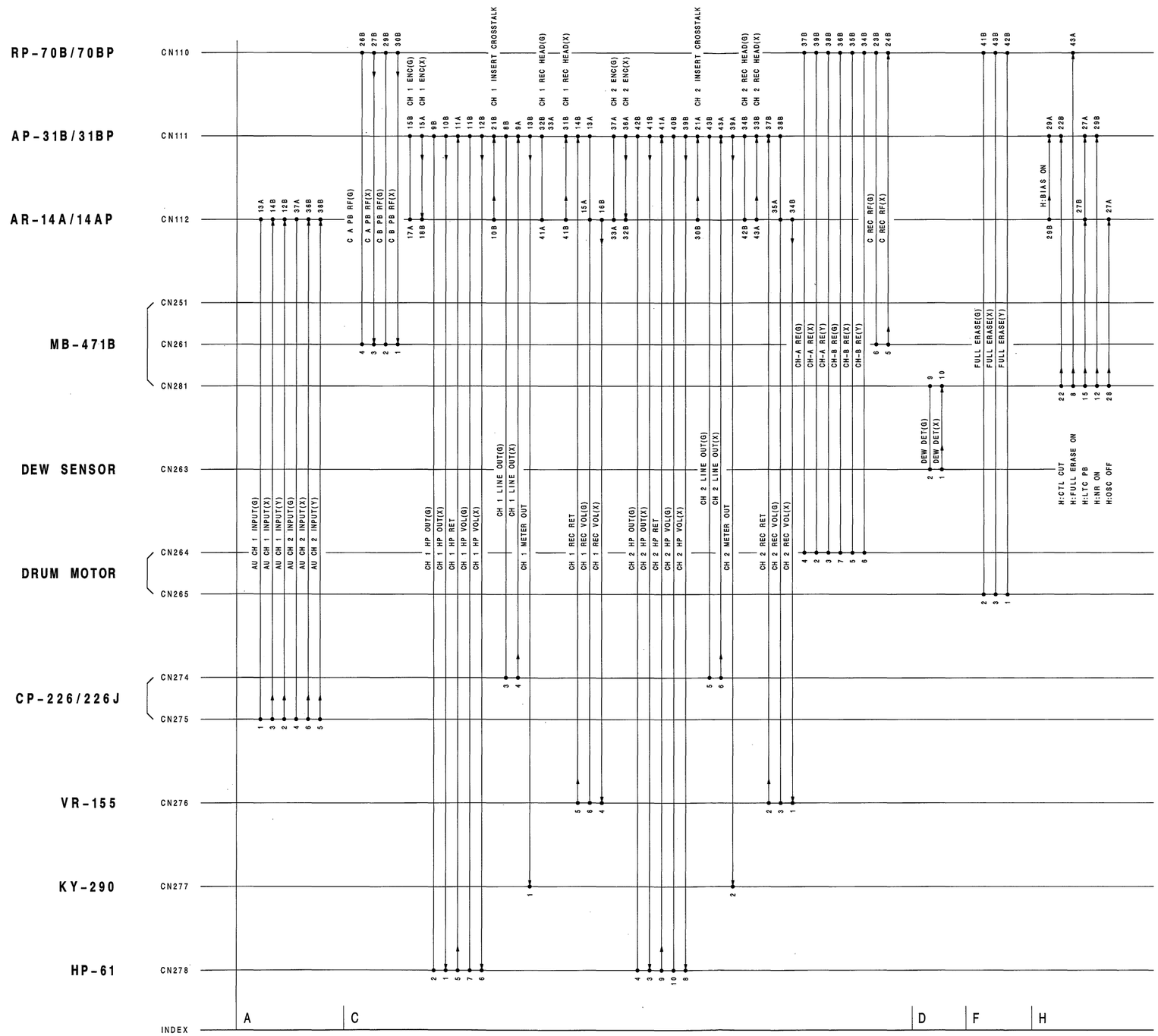

MB-471B (2/2)

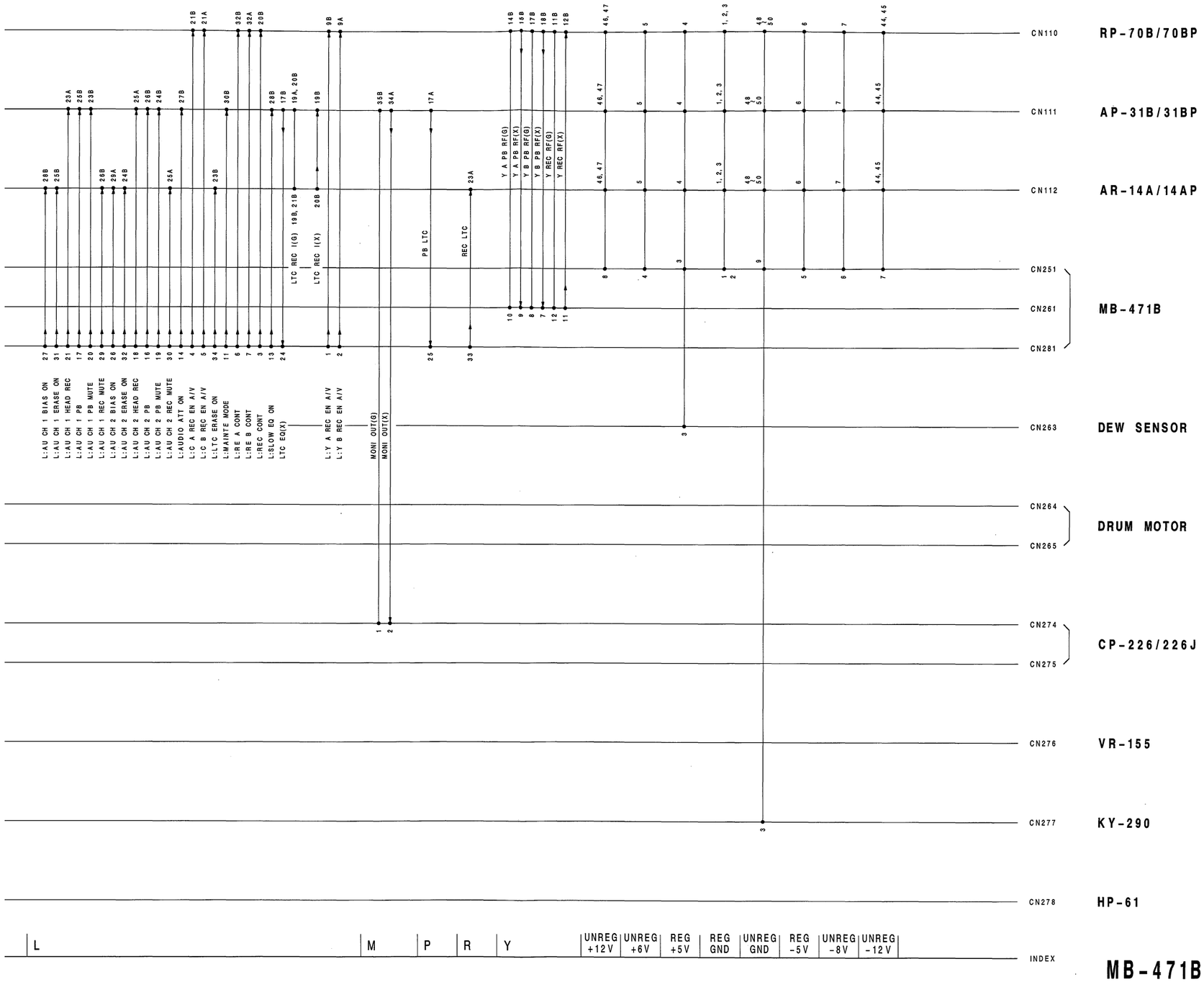

MB-471B BOARD (2/2)

BOARD NO. 1-648-919-31, 32
UVW-1400 (J) ;#10001-
UVW-1400 (UC) ;#10001-
UVW-1400P (EK) ;#10001-

MB-520/520A/520P/520AP (1/4)

MB-520/520A/520P/520AP(1/4);MOTHER BOARD

VRA-5A/5AP(UVW-1400/1400P ONLY)

CN101

	A		B	
200-2	REG GND	1	REG GND	103-1・2
200-1	REG GND	2	REG GND	103-1・2
103-3A	H:VIDEO EE	3	NC	
	NC	4	NC	
	NC	5	NC	
	NC	6	NC	
	NC	7	NC	
	NC	8	NC	
	NC	9	NC	
	NC	10	NC	
211-12	Y REC RF(G)	11	Y REC RF(X)	211-11
	NC	12	NC	
211-6	C REC RF(G)	13	C REC RF(X)	211-5
	NC	14	NC	
103-15A	Y EE RF(G)	15	Y EE RF(X)	103-15B
103-16A	C EE RF(G)	16	C EE RF(X)	103-16B
	NC	17	NC	
107-16A	L:RGB INPUT SEL	18	L:MAINTE MODE	105-14B
107-19A	L:COMPOSITE	19	L:COMPONENT	107-19B
107-20A	H:STD/L:NON STD	20	NC	
107-21A	INPUT FP1	21	INPUT FP2	107-21B
107-22A	INPUT SYNC	22	REC CF ID	107-22B
200-6	UNREG -8V	23	UNREG -8V	103-23
200-5	REG -5V	24	REG -5V	103-24
200-4	UNREG +6V	25	UNREG +6V	103-25
200-3	REG +5V	26	REG +5V	103-26・27
200-3	REG +5V	27	REG +5V	103-26・27
200-2	REG GND	28	REG GND	103-28・29・30
200-2	REG GND	29	REG GND	103-28・29・30
200-2	REG GND	30	REG GND	103-28・29・30

CN102

	A		B	
200-9	UNREG GND	1	UNREG GND	104-1・2・3
200-9	UNREG GND	2	UNREG GND	104-1・2・3
200-9	UNREG GND	3	UNREG GND	104-1・2・3
F2	UNREG +12V-2	4	UNREG +12V-2	104-4
F1	UNREG -12V-2	5	UNREG -12V-2	104-5
	NC	6	NC	
	NC	7	NC	
	NC	8	S DATA	106-16A
	NC	9	SCK	106-17A
	NC	10	STRB	106-18A
	NC	11	NC	
	NC	12	NC	
	NC	13	NC	
	NC	14	NC	
	NC	15	GND(GUARD)2	
271-8	INPUT Y(G)	16	INPUT Y(X)	271-7
	NC	17	NC	
271-10	INPUT R-Y(G)	18	INPUT R-Y(X)	271-9
	NC	19	NC	
271-12	INPUT B-Y(G)	20	INPUT B-Y(X)	271-11
	NC	21	GND(GUARD)2	
271-2	INPUT VIDEO(G)	22	INPUT VIDEO(X)	271-1
	NC	23	GND(GUARD)2	
271-6	INPUT S-Y(G)	24	INPUT S-Y(X)	271-5
	NC	25	NC	
271-4	INPUT S-C(G)	26	INPUT S-C(X)	271-3
	NC	27	GND(GUARD)2	
	NC	28	NC	
	REG GND	29	REG GND	104-29・30
	REG GND	30	REG GND	104-29・30

VP-44/44A/44P/44AP

CN103

	A		B	
101-1・2	REG GND	1	REG GND	105-1・2
101-1・2	REG GND	2	REG GND	105-1・2
105-3A,101-3A	H:VIDEO EE	3	CTL SIG	108-12B
105-4A	L:FWD/REV X13	4	TRACKING CONT(X)	108-23A
108-23B	L:JIG EXIST	5	L:NO SIG	105-5B
105-6A	Y SW PLS	6	C SW PLS	105-6B
231-12	LTC EQ(G)	7	LTC EQ(X)	231-11
107-14A	L:SLOW BID	8	VP SPARE	107-17B
211-10	Y A PB RF(G)	9	Y A PB RF(X)	211-9
211-8	Y B PB RF(G)	10	Y B PB RF(X)	211-7
	NC	11	GND(GUARD)1	
211-4	C A PB RF(G)	12	C A PB RF(X)	211-3
211-2	C B PB RF(G)	13	C B PB RF(X)	211-1
	NC	14	GND(GUARD)1	
101-15A	Y EE RF(G)	15	Y EE RF(X)	101-15B
101-16A	C EE RF(G)	16	C EE RF(X)	101-16B
	NC	17	GND	NC
105-18A	DEMOD Y(G)	18	DEMOD Y(X)	105-18B
105-19A	DEMOD C(G)	19	DEMOD C(X)	105-19B
107-14B	5V DO PLS	20	L:OXIDE/H:METAL	108-24B
105-21A	Y DO PLS	21	C DO PLS	105-21B
106-20A	TBC SPEED	22	L:NOISE LESS PB	105-3B
101-23	UNREG -8V	23	UNREG -8V	105-23
101-24	REG -5V	24	REG -5V	105-24
101-25	UNREG +6V	25	UNREG +6V	105-25
101-26・27	REG +5V	26	REG +5V	105-26・27
101-26・27	REG +5V	27	REG +5V	105-26・27
101-28・29・30	REG GND	28	REG GND	105-28・29・30
101-28・29・30	REG GND	29	REG GND	105-28・29・30
101-28・29・30	REG GND	30	REG GND	105-28・29・30

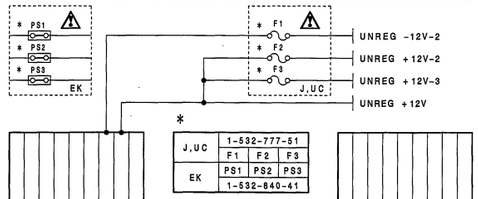

*

J,UC	1-532-777-51		
	F1	F2	F3
EK	PS1	PS2	PS3
	1-532-840-41		

CN200

1	DR GND	214-5・6
2	REG GND	201-1・2
3	REG +5V	201-3
4	UNREG +6V	201-4
5	REG -5V	201-5
6	UNREG -8V	201-6
7	UNREG -12V	
8	UNREG +12V	201-9
9	UNREG GND	

SW-REG.1-1 / SW-REG.1-2 / SW-REG.1-3 / SW-REG.1-4 / SW-REG.1-5 / SW-REG.1-6 / SW-REG.1-7 / SW-REG.1-8 / SW-REG.1-9

CN201

1	REG GND	200-2
2	REG GND	200-2
3	REG +5V	200-3
4	UNREG +6V	200-4
5	REG -5V	200-5
6	UNREG -8V	200-6
7	UNREG -12V-2	F1
8	UNREG +12V-3	F3
9	UNREG GND	200-9

MB-471B.251-1 / MB-471B.251-2 / MB-471B.215-3 / MB-471B.251-4 / MB-471B.251-5 / MB-471B.251-6 / MB-471B.251-7 / MB-471B.251-8 / MB-471B.251-9

CN211

1	C B PB RF(X)	103-13B
2	C B PB RF(G)	103-13A
3	C A PB RF(X)	103-12B
4	C A PB RF(G)	103-12A
5	C REC RF(X)	101-13B
6	C REC RF(G)	101-13A
7	Y B PB RF(X)	103-10B
8	Y B PB RF(G)	103-10A
9	Y A PB RF(X)	103-9B
10	Y A PB RF(G)	103-9A
11	Y REC RF(X)	101-11B
12	Y REC RF(G)	101-11A

MB-471B.261-1 / MB-471B.261-2 / MB-471B.261-3 / MB-471B.261-4 / MB-471B.261-5 / MB-471B.261-6 / MB-471B.261-7 / MB-471B.261-8 / MB-471B.261-9 / MB-471B.261-10 / MB-471B.261-11 / MB-471B.261-12

UVW-1400/1400P ONLY

CN231

1	L:LTC ERASE ON	109-19A
2	REC LTC	109-20A
3	L:AU CH 2 ERASE ON	109-20B
4	L:AU CH 1 ERASE ON	109-19B
5	L:AU CH 2 REC MUTE	109-18A
6	L:AU CH 1 REC MUTE	109-18B
7	H:OSC OFF	109-17A
8	L:AU CH 1 BIAS ON	109-16A
9	L:AU CH 2 BIAS ON	109-15A
10	PB LTC	109-14A
11	LTC EQ(X)	103-7B
12	LTC EQ(G)	103-7A
13	H:CTL CUT	109-16B
14	L:AU CH 1 HEAD REC	109-13A
15	L:AU CH 1 PB MUTE	109-15B
16	L:AU CH 2 PB MUTE	109-14B
17	L:AU CH 2 HEAD REC	109-12A
18	L:AU CH 1 PB	109-13B
19	L:AU CH 2 PB	109-12B
20	H:LTC PB	109-11A
21	L:AUDIO ATT ON	109-11B
22	L:SLOW EQ ON	109-10B
23	H:HR ON	109-10A
24	L:MAINTE MODE	107-15B
25	DEW DET(X)	109-21A
26	DEW DET(G)	109-21B
27	H:FULL ERASE ON	109-9A
28	L:RE B CONT	109-8A
29	L:RE A CONT	109-9B
30	L:C B REC EN A/V	109-7A
31	L:C A REC EN A/V	109-6B
32	L:REC CONT	109-7B
33	L:Y B REC EN A/V	109-6A
34	L:Y A REC EN A/V	109-6B

MB-471B.281-34 / MB-471B.281-33 / MB-471B.281-32 / MB-471B.281-31 / MB-471B.281-30 / MB-471B.281-29 / MB-471B.281-28 / MB-471B.281-27 / MB-471B.281-26 / MB-471B.281-25 / MB-471B.281-24 / MB-471B.281-23 / MB-471B.281-22 / MB-471B.281-21 / MB-471B.281-20 / MB-471B.281-19 / MB-471B.281-18 / MB-471B.281-17 / MB-471B.281-16 / MB-471B.281-15 / MB-471B.281-14 / MB-471B.281-13 / MB-471B.281-12 / MB-471B.281-11 / MB-471B.281-10 / MB-471B.281-9 / MB-471B.281-8 / MB-471B.281-7 / MB-471B.281-6 / MB-471B.281-5 / MB-471B.281-4 / MB-471B.281-3 / MB-471B.281-2 / MB-471B.281-1

16-110

MB-520/520A/520P/520AP (1/4)

TBC-28/28P

CN104

	A		B	
102-1・2・3	UNREG GND	1	UNREG GND	106-1・2・3
102-1・2・3	UNREG GND	2	UNREG GND	106-1・2・3
102-1・2・3	UNREG GND	3	UNREG GND	106-1・2・3
102-4	UNREG +12V-2	4	UNREG +12V-2	106-4
102-5	UNREG -12V-2	5	UNREG -12V-2	106-5
107-16B	L:RGB OUTPUT SEL	6	NC	
106-7A	TBC' d Y(G)	7	TBC' d Y(X)	106-7B
106-8A	TBC' d B-Y(G)	8	TBC' d B-Y(X)	106-8B
106-9A	TBC' d R-Y(G)	9	TBC' d R-Y(X)	106-9B
	NC	10	GND(GUARD)3	
106-11A	U AXIS SC(G)	11	U AXIS SC(X)	106-11B
106-12A	V AXIS SC(G)	12	V AXIS SC(X)	106-12B
	NC	13	GND(GUARD)3	
268-3	OUTPUT S-Y(G)	14	OUTPUT S-Y(X)	268-4
268-1	OUTPUT S-C(G)	15	OUTPUT S-C(X)	268-2
	NC	16	GND(GUARD)3	
268-9	OUTPUT Y/G(G)	17	OUTPUT Y/G(X)	268-10
268-13	OUTPUT B-Y/B(G)	18	OUTPUT B-Y/B(X)	268-14
268-11	OUTPUT R-Y/R(G)	19	OUTPUT R-Y/R(X)	268-12
	GND(GUARD)3	20	GND(GUARD)3	
106-20B	L ALT	21	H:BF2	106-22B
268-5	OUTPUT VIDEO 1(G)	22	OUTPUT VIDEO 1(X)	268-6
268-7	OUTPUT VIDEO 2(G)	23	OUTPUT VIDEO 2(X)	268-8
	GND(GUARD)3	24	GND(GUARD)3	
106-21A	L:YRB CLAMP	25	G SYNC(X)	106-25B
106-26A	L:VIDEO CLAMP	26	H:WIDE	106-28B
107-15A	CHARA FRAME	27	OUTPUT SYNC(X)	106-27B
107-15B	CHARA SIG	28	L:ENC BLANK	106-21B
102-29・30	REG GND	29	REG GND	106-29・30
102-29・30	REG GND	30	REG GND	106-29・30

CN105

	A		B	
103-1・2	REG GND	1	REG GND	107-1・2
103-1・2	REG GND	2	REG GND	107-1・2
107-3A,103-3A	H:VIDEO EE	3	L:NOISE LESS PB	107-3B,103-22B
107-4A,103-4A	L:FWD/REV X13	4	H:FWD/L:REV	107-4B
107-5A	L:TBC MUTE	5	L:NO SIG	103-5B,107-5B
107-6A,103-6A	Y SW PLS	6	C SW PLS	103-6B,107-6B
107-7A	L:HD	7	PB SYNC	107-7B
107-8A	L:REF SYNC	8	REF 1ST FIELD	107-8B
107-9A	L:VD	9	SERVO V	107-9B
107-10A	L:FWD/REV X15	10	H:EXT SC DET	107-10B
107-11A	H:EXT SYNC DET	11	PB FP1	107-11B
107-12A	PB FP2	12	L:SYNC DELAY	107-12B
	NC	13	L:CS TBC	107-13B
	NC	14	L:MAINTE MODE	101-18B,107-18B
	NC	15	H:NT ADJ ON(JIG)	NC
	NC	16	NC	
107-18A	TBC SPARE	17	GND	NC
103-18A	DEMOD Y(G)	18	DEMOD Y(X)	103-18B
103-19A	DEMOD C(G)	19	DEMOD C(X)	103-19B
	NC	20	GND	NC
103-21A	Y DO PLS	21	C DO PLS	103-21B
	NC	22	H:CHROMA MUTE	107-20B
103-23	UNREG -8V	23	UNREG -8V	107-23
103-24	REG -5V	24	REG -5V	107-24
103-25	UNREG +6V	25	UNREG +6V	107-25
103-26・27	REG +5V	26	REG +5V	107-26・27
103-26・27	REG +5V	27	REG +5V	107-26・27
103-28・29・30	REG GND	28	REG GND	107-28・29・30
103-28・29・30	REG GND	29	REG GND	137-28・29・30
103-28・29・30	REG GND	30	REG GND	107-28・29・30

CN106

	A		B	
104-1・2・3	UNREG GND	1	UNREG GND	109-1・2・3
104-1・2・3	UNREG GND	2	UNREG GND	109-1・2・3
104-1・2・3	UNREG GND	3	UNREG GND	109-1・2・3
104-4	UNREG +12V-2	4	UNREG +12V-2	109-4
104-5	UNREG -12V-2	5	UNREG -12V-2	109-5
267-1	INPUT REF(G)	6	INPUT REF(X)	267-2
1 104-7A	TBC' d Y(G)	7	TBC' d Y(X)	104-7B
2 104-8A	TBC' d B-Y(G)	8	TBC' d B-Y(X)	104-8B
3 104-9A	TBC' d R-Y(G)	9	TBC' d R-Y(X)	104-9B
	NC	10	GND(GUARD)3	
104-11A	U AXIS SC(G)	11	U AXIS SC(X)	104-11B
104-12A	V AXIS SC(G)	12	V AXIS SC(X)	104-12B
	NC	13	GND(GUARD)3	
	NC	14	NC	
	NC	15	NC	
102-8B	S DATA	16	NC	
102-9B	SCK	17	NC	
102-10B	STRB	18	L:OXIDE/H:METAL	108-24B
	GND(GUARD)3	19	NC	
103-22A	TBC SPEED	20	L ALT	104-21A
104-25A	L:YRB CLAMP	21	L:ENC BLANK	104-28B
109-22A	L:SYSTEM RESET	22	H:BF2	106-21B
109-23A	SERIAL CLOCK	23	L:SERIAL READY	109-23B
109-24A	SERIAL RX	24	SERIAL TX	109-24B
NC	G SYNC(G)	25	G SYNC(X)	104-25B
104-26A	L:VIDEO CLAMP	26	GND(GUARD)	NC
NC	OUTPUT SYNC(G)	27	OUTPUT SYNC(X)	104-27B
	NC	28	H:WIDE	104-26B,107-17A
104-29・30	REG GND	29	REG GND	109-29・30
104-29・30	REG GND	30	REG GND	109-29・30

UVW-1200/1200P ONLY

CN232

CP-239,532-17	1	FRAME GND
CP-239,532-16	2	FRAME GND
CP-239,532-15	3	DSR
CP-239,532-14	4	RXD
CP-239,532-13	5	TXD
CP-239,532-12	6	DTR
CP-239,532-11	7	NC
CP-239,532-10	8	NC
CP-239,532-9	9	NC
CP-239,532-8	10	NC
CP-239,532-7	11	NC
CP-239,532-6	12	NC
CP-239,532-5	13	NC
CP-239,532-4	14	NC
CP-239,532-3	15	NC
CP-239,532-2	16	REG GND
CP-239,532-1	17	REG GND

CN233

AP-34,2-1	1	PB LTC
AP-34,2-2	2	LTC EQ(X)
CP-34,NC	3	LTC EQ(G)
AP-34,2-3	4	H:CTL CUT
CP-34,2-4	5	L:AU CH 1 PB MUTE
AP-34,2-5	6	L:AU CH 2 PB MUTE
AP-34,2-6	7	L:AUDIO ATT ON
AP-34,2-7	8	L:SLOW EQ ON
AP-34,2-8	9	H:NR ON
AP-34,2-9	10	L:MAINTE MODE

CN234

	1	DEW DET(X)
	2	DEW DET(G)

CN235

HP-61,403-1	1	SIRCS VCC
HP-61,403-2	2	SIRCS DATA
HP-61,403-3	3	SIRCS GND

CN262

KY-280,590-1	1	REG GND
KY-280,590-2	2	REG GND
KY-280,590-3	3	SERIAL TX
KY-280,590-4	4	SERIAL RX
KY-280,590-5	5	L:SERIAL READY
KY-280,590-6	6	SERIAL CLOCK
KY-280,590-7	7	L:CS KEY
KY-280,590-8	8	L:SYSTEM RESET
KY-280,590-9	9	L:CS DOT
KY-280,590-10	10	NC
KY-280,590-11	11	NC
KY-280,590-12	12	REG +5V
KY-280,590-13	13	REG +5V
KY-280,590-14	14	UNREG +12V-2
KY-280,590-15	15	UNREG +12V-2

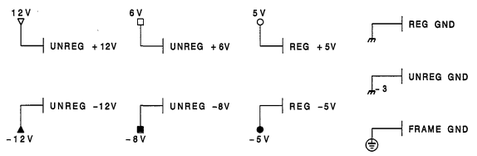

MB-520/520A
MB-520P/520AP BOARD (1/4)

BOARD NO.1-648-920-11,21
UVW-1400/1200 (J);#10001-
UVW-1400/1200 (UC);#10001-
UVW-1400P/1200P(EK);#10001-

MB-520/520A/520P/520AP (2/4)

MB-520/520A/520P/520AP(2/4);MOTHER BOARD

SS-53A

CN107

	A		B	
105-1・2	REG GND	1	REG GND	
105-1・2	REG GND	2	REG GND	
105-3A	H:VIDEO EE	3	L:NOISE LESS PB	105-3B
105-4A	L:FWD/REV X13	4	H:FWD/L:REV	105-4B
105-5A	L:TBC MUTE	5	L:NO SIG	105-5B
105-6A	Y SW PLS	6	C SW PLS	105-6B
105-7A	L:HD	7	PB SYNC	105-7B
105-8A	L:REF SYNC	8	REF 1ST FIELD	105-8B
105-9A	L:VD	9	SERVO V	105-9B
105-10A	L:FWD/REV X15	10	H:EXT SC DET	105-10B
105-11A	H:EXT SYNC DET	11	PB FP1	105-11B
105-12A	PB FP2	12	L:SYNC DELAY	105-12B
NC	TAPE SPEED	13	L:CS TBC	105-13B
103-8A	L:SLOW BID	14	SV DO PLS	103-20A
104-27A	CHARA FRAME	15	CHARA SIG	104-28B
101-18A	L:RGB INPUT SEL	16	L:RGB OUTPUT SEL	104-6A
106-28B	H:WIDE	17	VP SPARE	103-8B
105-17A	TBC SPARE	18	L:MAINTE MODE	231-24, 105-14B
101-19A	L:COMPOSITE	19	L:COMPONENT	101-19B
101-20A	H:STD/L:NON STD	20	H:CHROMA MUTE	105-22B
101-21A	INPUT FP1	21	INPUT FP2	101-21B
101-22A	INPUT SYNC	22	REC CF ID	101-22B
105-23	UNREG -8V	23	UNREG -8V	
105-24	REG -5V	24	REG -5V	214-2
105-25	UNREG +6V	25	UNREG +6V	214-3
105-26・27	REG +5V	26	REG +5V	214-4
105-26・27	REG +5V	27	REG +5V	214-4
105-28・29・30	REG GND	28	REG GND	214-1
105-28・29・30	REG GND	29	REG GND	214-1
105-28・29・30	REG GND	30	REG GND	214-1

CN108

	A		B	
214-10B	DRUM ERROR	1	DRUM CURRENT	214-11B
214-12B	CAPSTAN ERROR	2	CAPSTAN CURRENT	214-13B
214-14B	S REEL POWER CONT	3	S REEL ERROR	214-15B
214-16B	S REEL CURRENT	4	SOL CURRENT	214-17B
214-18B	DRUM FG	5	DRUM PG	214-19B
214-20B	S REEL FG B	6	S REEL FG A	214-21B
214-22B	L:TAPE END	7	CAPSTAN DIR CONT	214-23B
214-24B	CAPSTAN FG A	8	CAPSTAN FG B	214-25B
214-26B	ADJUST +11V	9	CAPSTAN FG A NORM	214-27B
214-28B	CAPSTAN FG B NORM	10	ADJUST GND	214-29B
214-30B	S TENSION	11	ADJUST +5V	214-31B
214-32B	H:CTL GAIN UP	12	CTL SIG	214-33B, 103-3B
214-34B	CTL PULSE	13	REC CTL	214-35B
214-36A	H:CTL REC	14	L:TAPE TOP	214-37B
214-38B	THREADING FG	15	H:UNTH END	214-39B
214-40B	H:TH END	16	EMERGENCY MS RESET	214-41B
214-42B	1/2 VD	17	SERVO SCK	214-43B
214-44B	SERVO SI	18	SERVO SO	214-45B
214-46B	T REEL FG B	19	T REEL FG A	214-47B
214-48A	T REEL POWER CONT	20	T REEL ERROR	214-49A
214-50A	T REEL CURRENT	21	THREADING ERROR	214-50B
214-49B	TH/UNTH POWER CONT	22	L:MS BUSY	214-48B
103-4B	TRACKING CONT(X)	23	L:JIG EXIST	103-5A
NC	SV SPARE	24	L:OXIDE/H:METAL	103-20B, 106-18B
235-1	SIRCS VCC	25	SIRCS DATA	235-2
235-3	SIRCS GND	26	NC	
	NC	27	NC	
	NC	28	NC	
	NC	29	NC	
	NC	30	NC	

CN266 #

CP-225, 651-1	1	EXT TC IN(G)	109-28A
CP-225, 651-2	2	EXT TC IN(X)	109-28B
CP-225, 651-3	3	OUTPUT LTC(G)	109-27A
CP-225, 651-4	4	OUTPUT LTC(X)	109-27B

CN267

CP-225, 652-1	1	INPUT REF(G)	106-6A
CP-225, 652-2	2	INPUT REF(X)	106-6B
CP-225, 652-3	3	REG -5V	200-5
CP-225, 652-4	4	REG GND	200-2
CP-225, 652-5	5	REG +5V	200-3
CP-225, 652-6	6	NC	
CP-225, 652-7	7	NC	

CN268

CP-225, 655-1	1	OUTPUT S-C(G)	104-15A
CP-225, 655-2	2	OUTPUT S-C(X)	104-15B
CP-225, 655-3	3	OUTPUT S-Y(G)	104-14A
CP-225, 655-4	4	OUTPUT S-Y(X)	104-14B
CP-225, 655-5	5	OUTPUT VIDEO 1(G)	104-22A
CP-225, 655-6	6	OUTPUT VIDEO 1(X)	104-22B
CP-225, 655-7	7	OUTPUT VIDEO 2(G)	104-23A
CP-225, 655-8	8	OUTPUT VIDEO 2(X)	104-23B
CP-225, 655-9	9	OUTPUT Y/G(G)	104-17A
CP-225, 655-10	10	OUTPUT Y/G(X)	104-17B
CP-225, 655-11	11	OUTPUT R-Y/R(G)	104-19A
CP-225, 655-12	12	OUTPUT R-Y/R(X)	104-19B
CP-225, 655-13	13	OUTPUT B-Y/B(G)	104-18A
CP-225, 655-14	14	OUTPUT B-Y/B(X)	104-18B

UVW-1400/1400P ONLY

CN271

CP-225, 654-1	1	INPUT VIDEO(X)	102-22B
CP-225, 654-2	2	INPUT VIDEO(G)	102-22A
CP-225, 654-3	3	INPUT S-C(X)	102-26B
CP-225, 654-4	4	INPUT S-C(G)	102-26A
CP-225, 654-5	5	INPUT S-Y(X)	102-24B
CP-225, 654-6	6	INPUT S-Y(G)	102-24A
CP-225, 654-7	7	INPUT Y(X)	102-16B
CP-225, 654-8	8	INPUT Y(G)	102-16A
CP-225, 654-9	9	INPUT R-Y(X)	102-18B
CP-225, 654-10	10	INPUT R-Y(G)	102-18A
CP-225, 654-11	11	INPUT B-Y(X)	102-20B
CP-225, 654-12	12	INPUT B-Y(G)	102-20A

#	CHANGED INFORMATION	SERIAL NO.
CN266	M T → N M	UVW-1400(J) ;#10421- UVW-1400(UC) ;#10681- UVW-1400P(EK);#10991- UVW-1200(J) ;#10201- UVW-1200(UC) ;#10821- UVW-1200P(EK);#11221-

16-112

MB-520/520A/520P/520AP (2/4)

DR-214

	CN109 A		CN109 B	
106-1·2·3	UNREG GND	1	UNREG GND	
106-1·2·3	UNREG GND	2	UNREG GND	
106-1·2·3	UNREG GND	3	UNREG GND	
106-4	UNREG +12V-2	4	UNREG +12V-2	
106-5	UNREG -12V-2	5	UNREG -12V-2	
231-33	L:Y B REC EN A/V	6	L:Y A REC EN A/V	231-34
231-30	L:C B REC EN A/V	7	L:REC CONT	231-32
231-28	L:RE B CONT	8	L:C A REC EN A/V	231-31
231-27	H:FULL ERASE ON	9	L:RE A CONT	231-29
231-23	H:NR ON	10	L:SLOW EQ ON	231-22
231-20	H:LTC PB	11	L:AUDIO ATT ON	231-21
231-17	L:AU CH 2 HEAD REC	12	L:AU CH 2 PB	231-19
231-14	L:AU CH 1 HEAD REC	13	L:AU CH 1 PB	231-18
231-10	PB LTC	14	L:AU CH 2 PB MUTE	231-16
231-9	L:AU CH 2 BIAS ON	15	L:AU CH 1 PB MUTE	231-15
231-8	L:AU CH 1 BIAS ON	16	H:CTL CUT	231-13
231-7	H:OSC OFF	17	L:CS DOT	262-9
231-5	L:AU CH 2 REC MUTE	18	L:AU CH 1 REC MUTE	231-6
231-1	L:LTC ERASE ON	19	L:AU CH 1 ERASE ON	231-4
231-2	REC LTC	20	L:AU CH 2 ERASE ON	231-3
231-25	DEW DET(X)	21	DEW DET(G)	231-26
262-8, 106-22A	L:SYSTEM RESET	22	L:CS KEY	262-7
262-6, 106-23A	SERIAL CLOCK	23	L:SERIAL READY	105-23B, 262-5
262-4, 106-24A	SERIAL RX	24	SERIAL TX	106-24B, 262-3
232-6	DTR	25	TXD	232-5
232-3	DSR	26	RXD	232-4
266-3	OUTPUT LTC(G)	27	OUTPUT LTC(X)	266-4
266-1	EXT TC IN(G)	28	EXT TC IN(X)	266-2
106-29·30	REG GND	29	REG GND	250-9·10, 251-1·2
106-29·30	REG GND	30	REG GND	250-9·10, 251-1·2

	CN214 A		CN214 B	
	REG GND	1	REG GND	107-28, 29, 30
	REG -5V	2	REG -5V	107-24
	UNREG +6V	3	UNREG +6V	107-25
	REG +5V	4	REG +5V	107-26, 27
	DR GND	5	DR GND	200-1
	DR GND	6	DR GND	200-1
	UNREG +12V	7	UNREG +12V	200-8
	UNREG +12V	8	UNREG +12V	200-8
	UNREG -12V-2	9	UNREG -12V-2	F1
	NC	10	DRUM ERROR	108-1A
	NC	11	DRUM CURRENT	108-1B
	NC	12	CAPSTAN ERROR	108-2A
	NC	13	CAPSTAN CURRENT	108-2B
	NC	14	S REEL POWER CONT	108-3A
	NC	15	S REEL ERROR	108-3B
	NC	16	S REEL CURRENT	108-4A
	NC	17	SOL CURRENT	108-4B
	NC	18	DRUM FG	108-5A
	NC	19	DRUM PG	108-5B
	NC	20	S REEL FG B	108-6A
	NC	21	S REEL FG A	108-6B
	NC	22	L:TAPE END	108-7A
	NC	23	CAPSTAN DIR CONT	108-7B
	NC	24	CAPSTAN FG A	108-8A
	NC	25	CAPSTAN FG B	108-8B
	NC	26	ADJUST +11V	108-9A
	NC	27	CAPSTAN FG A NORM	108-9B
	NC	28	CAPSTAN FG B NORM	108-10A
	NC	29	ADJUST GND	108-10B
	NC	30	S TENSION	108-11A
	NC	31	ADJUST +5V	108-11B
	NC	32	H:CTL GAIN UP	108-12A
	NC	33	CTL SIG	108-12B
	NC	34	CTL PULSE	108-13A
	NC	35	REC CTL	108-13B
	NC	36	H:CTL REC	108-14A
	NC	37	L:TAPE TOP	108-14B
	NC	38	THREADING FG	108-15A
	NC	39	H:UNTH END	108-15B
	NC	40	H:TH END	108-16A
	NC	41	EMERGENCY MS RESET	108-16B
	NC	42	1/2 VD	108-17A
	NC	43	SERVO SCK	108-17B
	NC	44	SERVO SI	108-18A
	NC	45	SERVO SO	108-18B
	NC	46	T REEL FG B	108-19A
	NC	47	T REEL FG A	108-19B
108-20A	T REEL POWER CONT	48	L:MS BUSY	108-22B
108-20B	T REEL ERROR	49	TH/UNTH POWER CONT	108-22A
108-21A	T REEL CURRENT	50	THREADING ERROR	108-21B

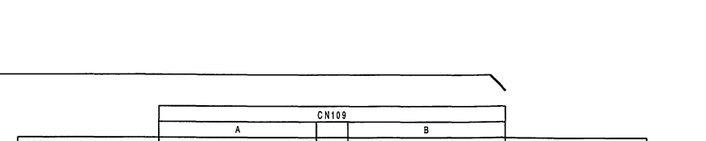

MB-520/520A
MB-520P/520AP BOARD (2/4)

BOARD NO. 1-648-920-11, 21
UVW-1400/1200 (J) ;#10001-
UVW-1400/1200 (UC) ;#10001-
UVW-1400P/1200P (EK) ;#10001-

MB-520/520A/520P/520AP (3/4)

MB-520/520A/520P/520AP(3/4);MOTHER BOARD

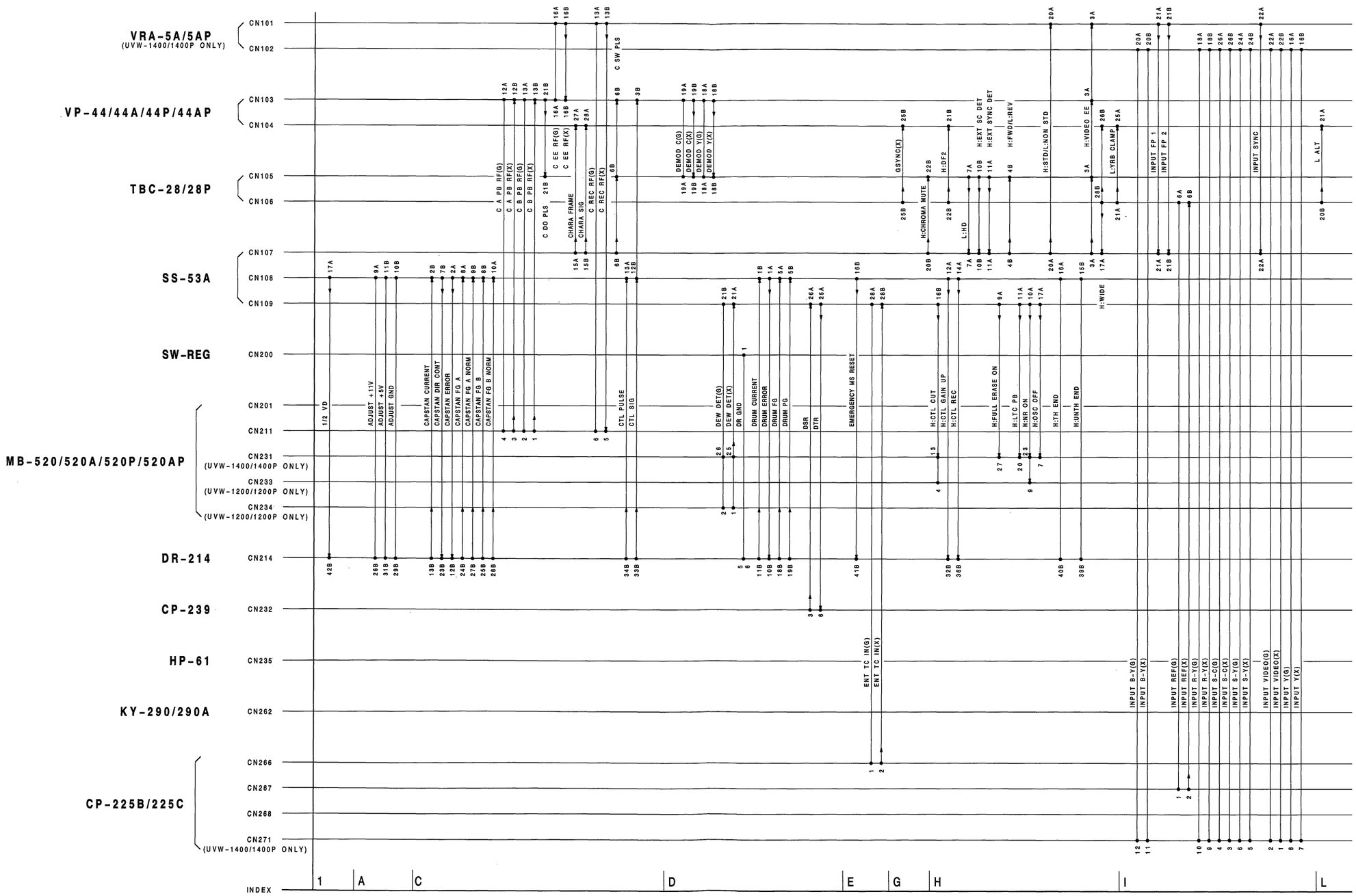

16-114

MB-520/520A/520P/520AP (3/4)

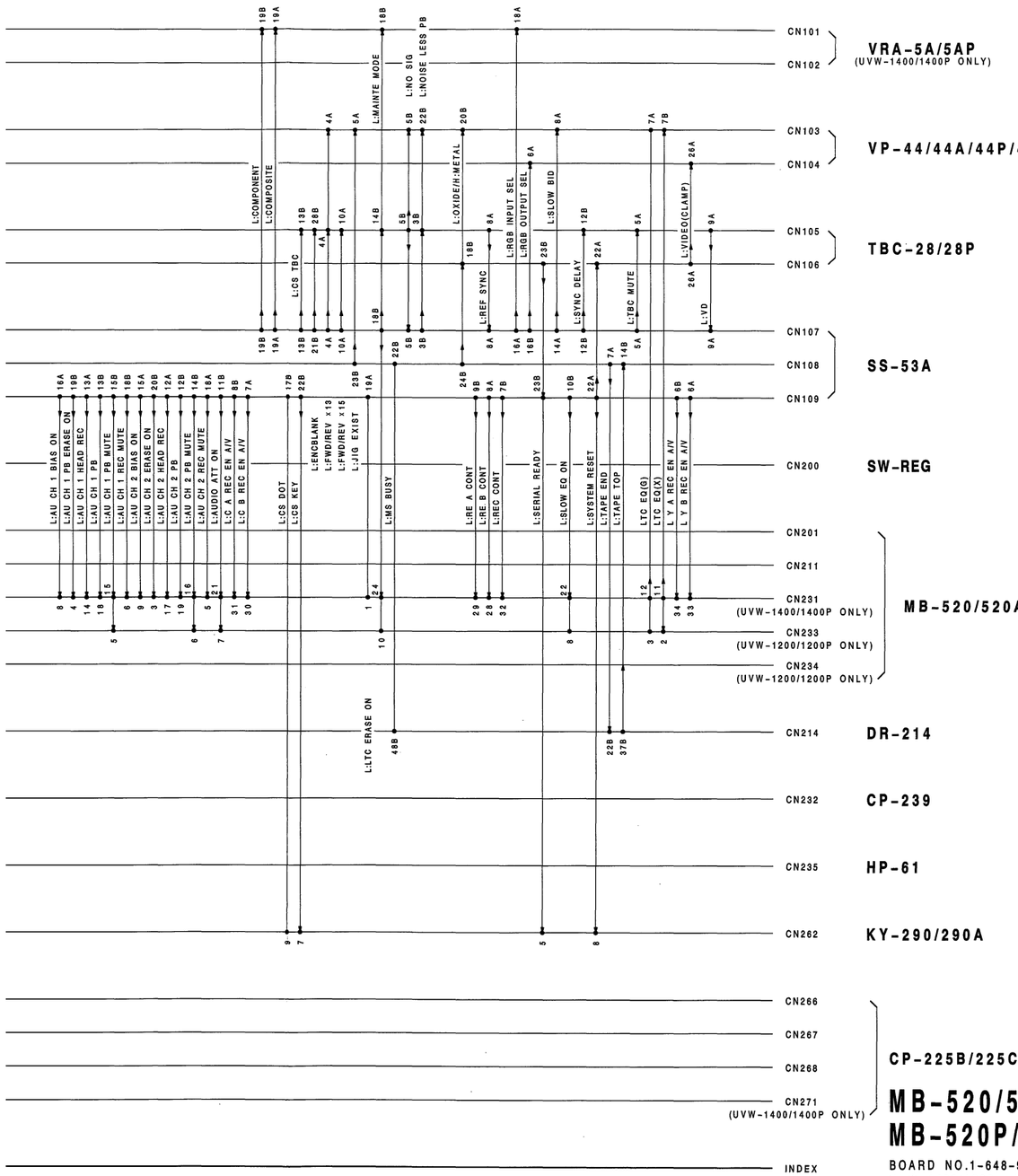

MB-520/520A
MB-520P/520AP BOARD (3/4)

BOARD NO.1-648-920-11,21
UVW-1400/1200 (J) ;#10001-
UVW-1400/1200 (UC);#10001-
UVW-1400P/1200P(EK);#10001-

UVW-1400/1400P
UVW-1200/1200P

16-115

MB-520/520A/520P/520AP (4/4)

MB-520/520A/520P/520AP(4/4);MOTHER BOARD

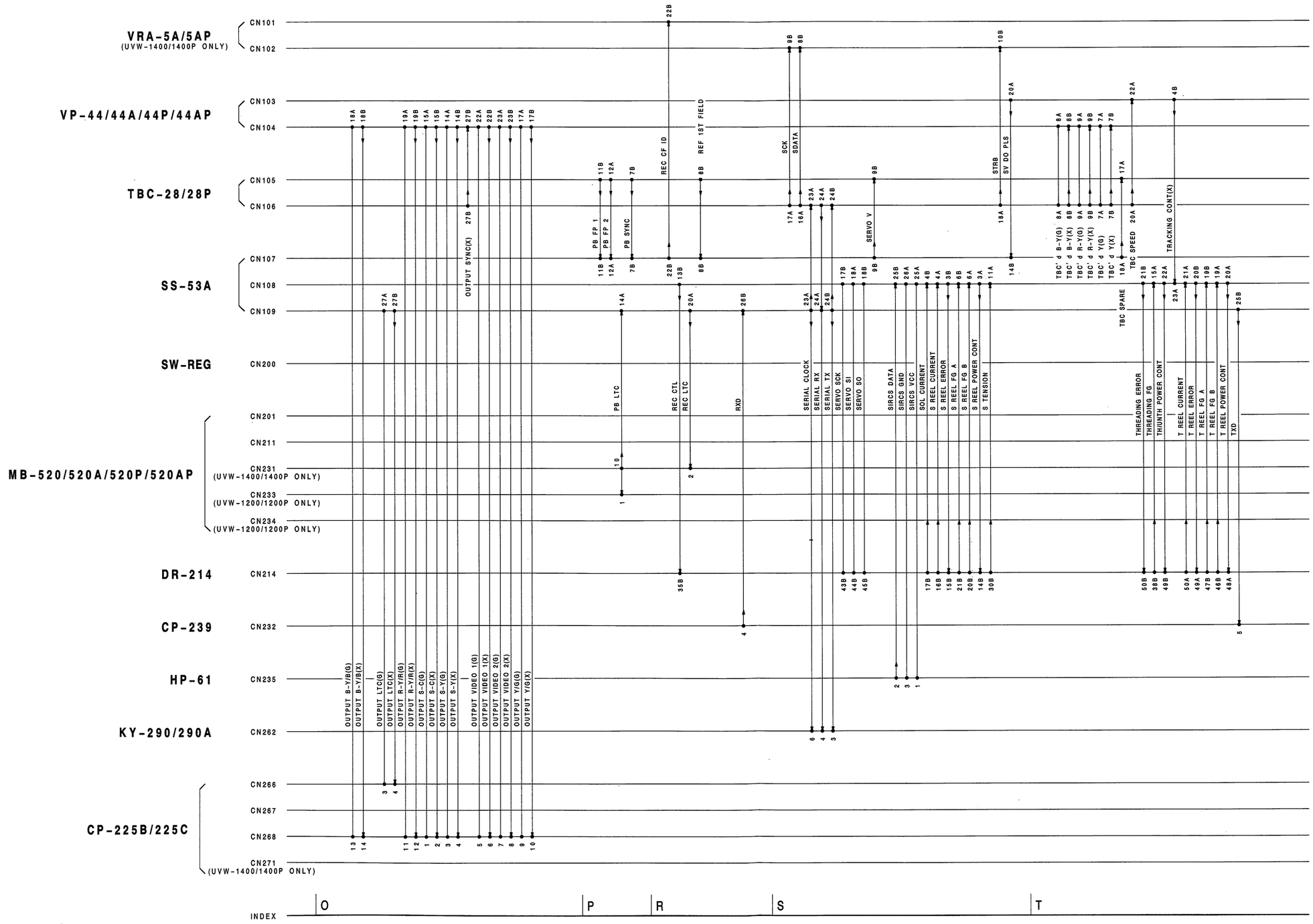

16-116

UVW-1400/1400P
UVW-1200/1200P

MB-520/520A/520P/520AP (4/4)

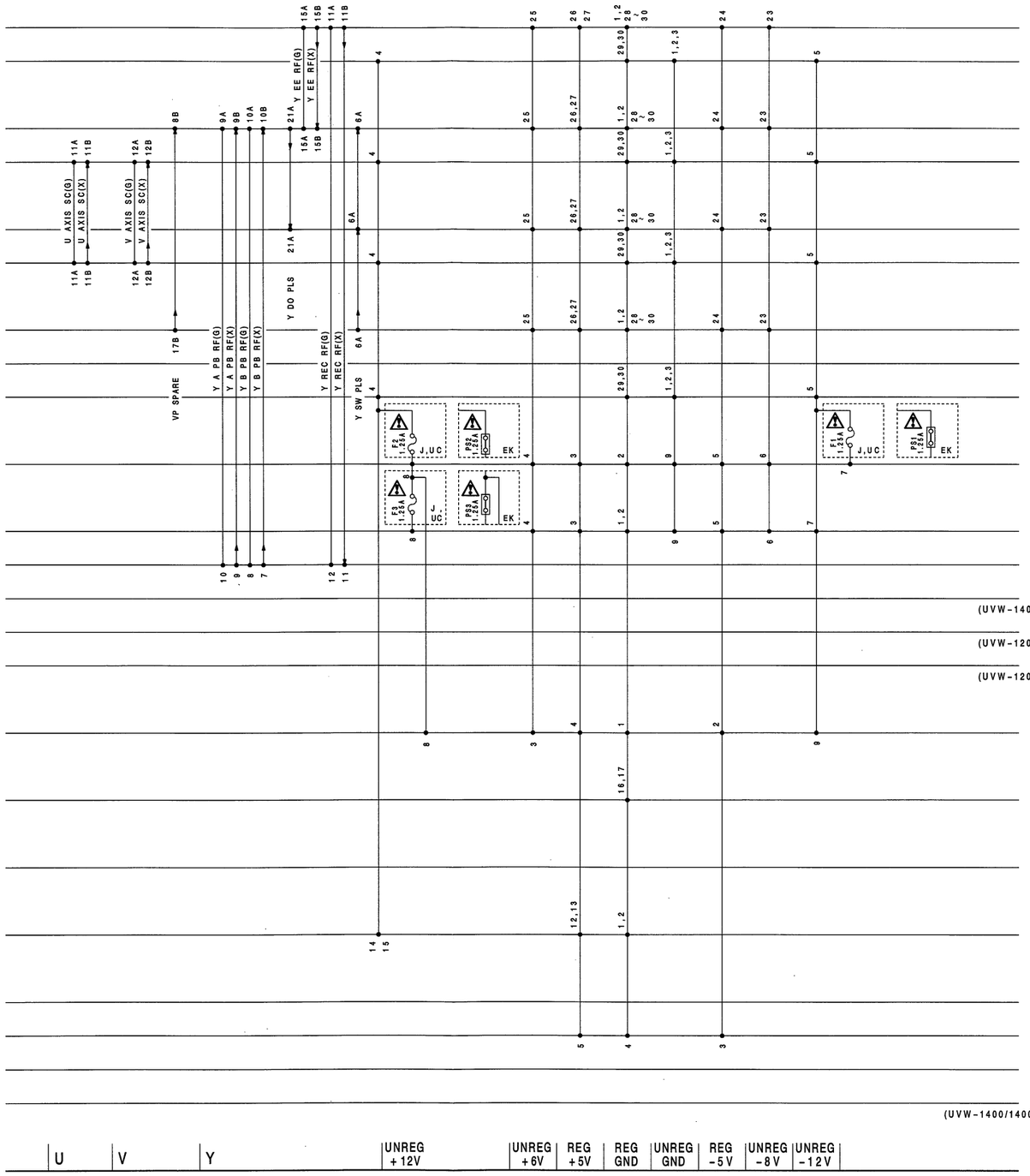

VRA-5A/5AP (UVW-1400/1400P ONLY)

VP-44/44A/44P/44AP

TBC-28/28P

SS-53A

SW-REG

MB-520/520A/520P/520AP

DR-214

CP-239

HP-61

KY-290/290A

CP-225B/225C

MB-520/520A
MB-520P/520AP BOARD (4/4)

BOARD NO.1-648-920-11,21
UVW-1400/1200 (J) ;#10001-
UVW-1400/1200 (UC);#10001-
UVW-1400P/1400P(EK);#10001-

16-117

FRAME(1/2)

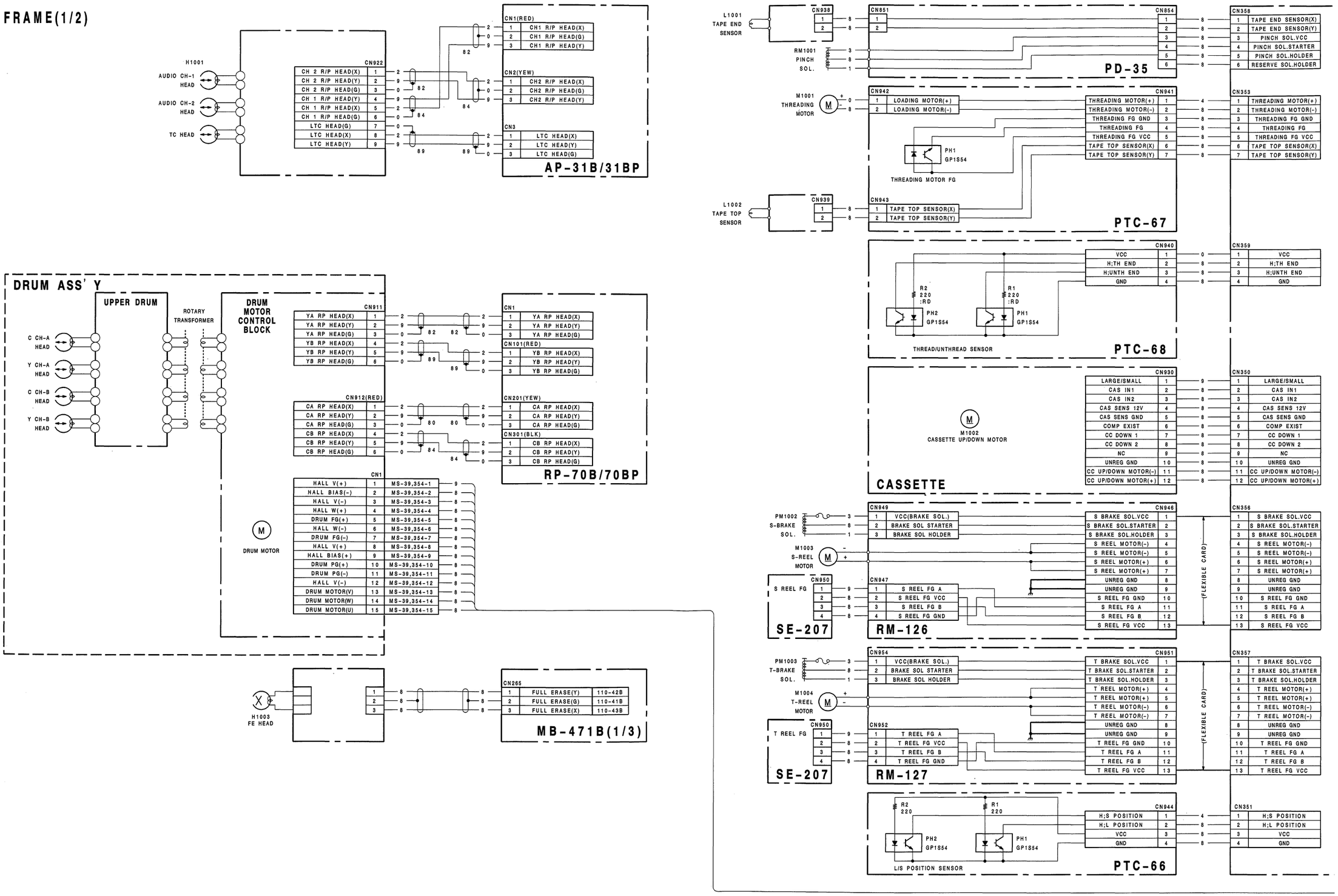
H1001
AUDIO CH-1 HEAD
AUDIO CH-2 HEAD
TC HEAD
CN922
CH 2 R/P HEAD(X) 1
CH 2 R/P HEAD(Y) 2
CH 2 R/P HEAD(G) 3
CH 1 R/P HEAD(Y) 4
CH 1 R/P HEAD(X) 5
CH 1 R/P HEAD(G) 6
LTC HEAD(G) 7
LTC HEAD(X) 8
LTC HEAD(Y) 9
CN1(RED)
1 CH1 R/P HEAD(X)
2 CH1 R/P HEAD(G)
3 CH1 R/P HEAD(Y)
CN2(YEW)
1 CH2 R/P HEAD(X)
2 CH2 R/P HEAD(G)
3 CH2 R/P HEAD(Y)
CN3
1 LTC HEAD(X)
2 LTC HEAD(Y)
3 LTC HEAD(G)
AP-31B/31BP
DRUM ASS' Y
UPPER DRUM
ROTARY TRANSFORMER
DRUM MOTOR CONTROL BLOCK
C CH-A HEAD
Y CH-A HEAD
C CH-B HEAD
Y CH-B HEAD
CN911
YA RP HEAD(X) 1
YA RP HEAD(Y) 2
YA RP HEAD(G) 3
YB RP HEAD(X) 4
YB RP HEAD(Y) 5
YB RP HEAD(G) 6
CN912(RED)
CA RP HEAD(X) 1
CA RP HEAD(Y) 2
CA RP HEAD(G) 3
CB RP HEAD(X) 4
CB RP HEAD(Y) 5
CB RP HEAD(G) 6
CN1
HALL V(+) 1 MS-39,354-1
HALL BIAS(-) 2 MS-39,354-2
HALL V(-) 3 MS-39,354-3
HALL W(+) 4 MS-39,354-4
DRUM FG(+) 5 MS-39,354-5
HALL W(-) 6 MS-39,354-6
DRUM FG(-) 7 MS-39,354-7
HALL V(+) 8 MS-39,354-8
HALL BIAS(+) 9 MS-39,354-9
DRUM PG(+) 10 MS-39,354-10
DRUM PG(-) 11 MS-39,354-11
HALL V(-) 12 MS-39,354-12
DRUM MOTOR(V) 13 MS-39,354-13
DRUM MOTOR(W) 14 MS-39,354-14
DRUM MOTOR(U) 15 MS-39,354-15
DRUM MOTOR
CN1
1 YA RP HEAD(X)
2 YA RP HEAD(Y)
3 YA RP HEAD(G)
CN101(RED)
1 YB RP HEAD(X)
2 YB RP HEAD(Y)
3 YB RP HEAD(G)
CN201(YEW)
1 CA RP HEAD(X)
2 CA RP HEAD(Y)
3 CA RP HEAD(G)
CN301(BLK)
1 CB RP HEAD(X)
2 CB RP HEAD(Y)
3 CB RP HEAD(G)
RP-70B/70BP
H1003
FE HEAD
CN265
1 FULL ERASE(Y) 110-42B
2 FULL ERASE(G) 110-41B
3 FULL ERASE(X) 110-43B
MB-471B(1/3)
L1001
TAPE END SENSOR
CN938
CN851
CN854
CN358
1 TAPE END SENSOR(X)
2 TAPE END SENSOR(Y)
3 PINCH SOL.VCC
4 PINCH SOL.STARTER
5 PINCH SOL.HOLDER
6 RESERVE SOL.HOLDER
RM1001
PINCH SOL.
PD-35
M1001
THREADING MOTOR
CN942
1 LOADING MOTOR(+)
2 LOADING MOTOR(-)
CN941
THREADING MOTOR(+) 1
THREADING MOTOR(-) 2
THREADING FG GND 3
THREADING FG 4
THREADING FG VCC 5
TAPE TOP SENSOR(X) 6
TAPE TOP SENSOR(Y) 7
CN353
1 THREADING MOTOR(+)
2 THREADING MOTOR(-)
3 THREADING FG GND
4 THREADING FG
5 THREADING FG VCC
6 TAPE TOP SENSOR(X)
7 TAPE TOP SENSOR(Y)
PH1
GP1S54
THREADING MOTOR FG
L1002
TAPE TOP SENSOR
CN939
CN943
1 TAPE TOP SENSOR(X)
2 TAPE TOP SENSOR(Y)
PTC-67
CN940
VCC 1
H;TH END 2
H;UNTH END 3
GND 4
CN359
1 VCC
2 H;TH END
3 H;UNTH END
4 GND
R2 220 :RD
R1 220 :RD
PH2 GP1S54
PH1 GP1S54
THREAD/UNTHREAD SENSOR
PTC-68
CN930
LARGE/SMALL 1
CAS IN1 2
CAS IN2 3
CAS SENS 12V 4
CAS SENS GND 5
COMP EXIST 6
CC DOWN 1 7
CC DOWN 2 8
NC 9
UNREG GND 10
CC UP/DOWN MOTOR(-) 11
CC UP/DOWN MOTOR(+) 12
CN350
1 LARGE/SMALL
2 CAS IN1
3 CAS IN2
4 CAS SENS 12V
5 CAS SENS GND
6 COMP EXIST
7 CC DOWN 1
8 CC DOWN 2
9 NC
10 UNREG GND
11 CC UP/DOWN MOTOR(-)
12 CC UP/DOWN MOTOR(+)
M1002
CASSETTE UP/DOWN MOTOR
CASSETTE
PM1002
S-BRAKE SOL.
CN949
1 VCC(BRAKE SOL.)
2 BRAKE SOL STARTER
3 BRAKE SOL HOLDER
CN946
S BRAKE SOL.VCC 1
S BRAKE SOL.STARTER 2
S BRAKE SOL.HOLDER 3
S REEL MOTOR(-) 4
S REEL MOTOR(-) 5
S REEL MOTOR(+) 6
S REEL MOTOR(+) 7
UNREG GND 8
UNREG GND 9
S REEL FG GND 10
S REEL FG A 11
S REEL FG B 12
S REEL FG VCC 13
(FLEXIBLE CARD)
CN356
1 S BRAKE SOL.VCC
2 S BRAKE SOL.STARTER
3 S BRAKE SOL.HOLDER
4 S REEL MOTOR(-)
5 S REEL MOTOR(-)
6 S REEL MOTOR(+)
7 S REEL MOTOR(+)
8 UNREG GND
9 UNREG GND
10 S REEL FG GND
11 S REEL FG A
12 S REEL FG B
13 S REEL FG VCC
M1003
S-REEL MOTOR
CN950
S REEL FG
CN947
1 S REEL FG A
2 S REEL FG VCC
3 S REEL FG B
4 S REEL FG GND
SE-207
RM-126
PM1003
T-BRAKE SOL.
CN954
1 VCC(BRAKE SOL.)
2 BRAKE SOL STARTER
3 BRAKE SOL HOLDER
CN951
T BRAKE SOL.VCC 1
T BRAKE SOL.STARTER 2
T BRAKE SOL.HOLDER 3
T REEL MOTOR(+) 4
T REEL MOTOR(+) 5
T REEL MOTOR(-) 6
T REEL MOTOR(-) 7
UNREG GND 8
UNREG GND 9
T REEL FG GND 10
T REEL FG A 11
T REEL FG B 12
T REEL FG VCC 13
(FLEXIBLE CARD)
CN357
1 T BRAKE SOL.VCC
2 T BRAKE SOL.STARTER
3 T BRAKE SOL.HOLDER
4 T REEL MOTOR(+)
5 T REEL MOTOR(+)
6 T REEL MOTOR(-)
7 T REEL MOTOR(-)
8 UNREG GND
9 UNREG GND
10 T REEL FG GND
11 T REEL FG A
12 T REEL FG B
13 T REEL FG VCC
M1004
T-REEL MOTOR
CN950
T REEL FG
CN952
1 T REEL FG A
2 T REEL FG VCC
3 T REEL FG B
4 T REEL FG GND
SE-207
RM-127
R2 220
R1 220
PH2 GP1S54
PH1 GP1S54
L/S POSITION SENSOR
CN944
H;S POSITION 1
H;L POSITION 2
VCC 3
GND 4
CN351
1 H;S POSITION
2 H;L POSITION
3 VCC
4 GND
PTC-66

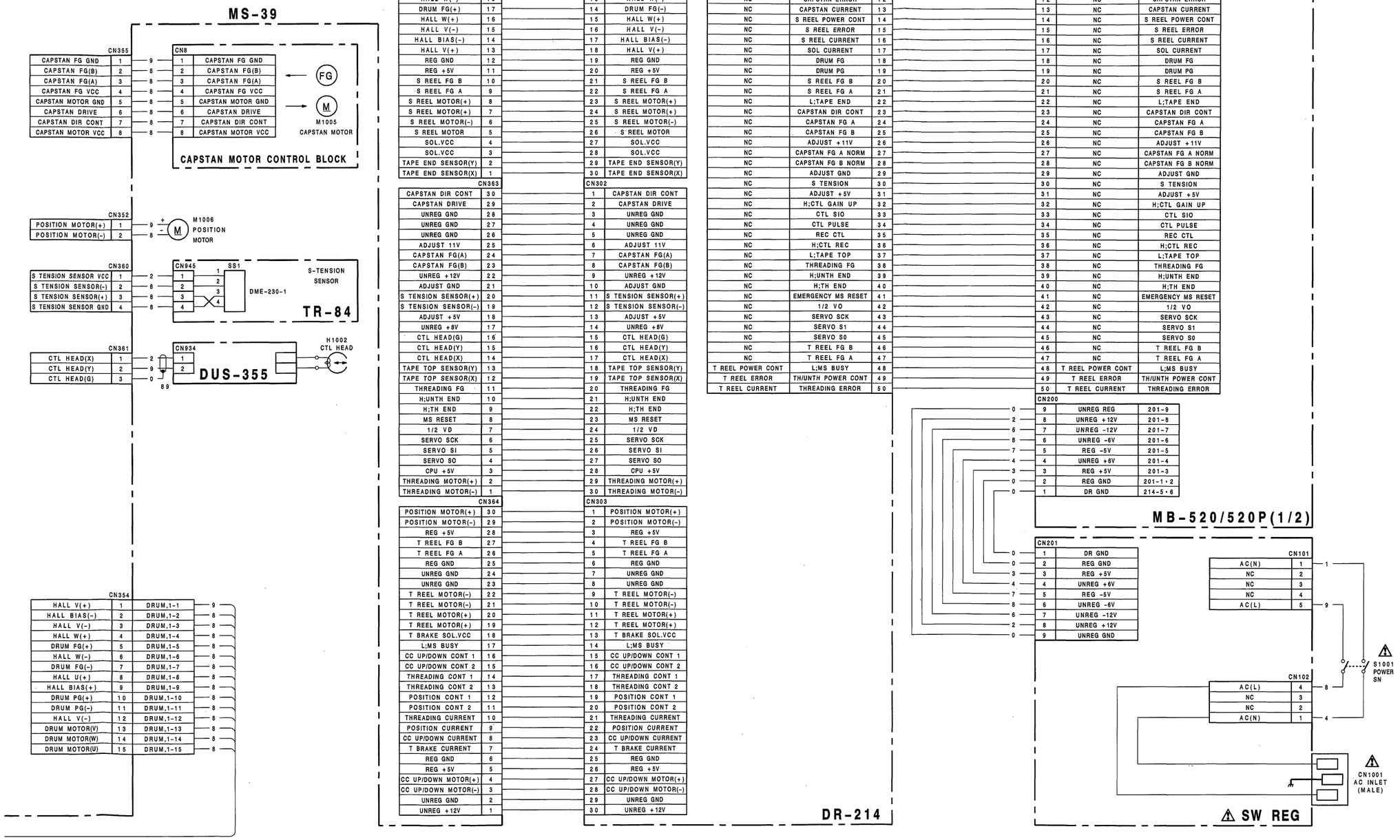
MS-39
CN355
CAPSTAN FG GND 1
CAPSTAN FG(B) 2
CAPSTAN FG(A) 3
CAPSTAN FG VCC 4
CAPSTAN MOTOR GND 5
CAPSTAN DRIVE 6
CAPSTAN DIR CONT 7
CAPSTAN MOTOR VCC 8
CN8
1 CAPSTAN FG GND
2 CAPSTAN FG(B)
3 CAPSTAN FG(A)
4 CAPSTAN FG VCC
5 CAPSTAN MOTOR GND
6 CAPSTAN DRIVE
7 CAPSTAN DIR CONT
8 CAPSTAN MOTOR VCC
FG
M
M1005
CAPSTAN MOTOR
CAPSTAN MOTOR CONTROL BLOCK
CN352
POSITION MOTOR(+) 1
POSITION MOTOR(-) 2
M1006
POSITION MOTOR
CN360
S TENSION SENSOR VCC 1
S TENSION SENSOR(-) 2
S TENSION SENSOR(+) 3
S TENSION SENSOR GND 4
CN945
SS1
DME-230-1
S-TENSION SENSOR
TR-84
CN361
CTL HEAD(X) 1
CTL HEAD(Y) 2
CTL HEAD(G) 3
CN934
DUS-355
H1002
CTL HEAD
CN354
HALL V(+) 1 DRUM,1-1
HALL BIAS(-) 2 DRUM,1-2
HALL V(-) 3 DRUM,1-3
HALL W(+) 4 DRUM,1-4
DRUM FG(+) 5 DRUM,1-5
HALL W(-) 6 DRUM,1-6
DRUM FG(-) 7 DRUM,1-7
HALL U(+) 8 DRUM,1-8
HALL BIAS(+) 9 DRUM,1-9
DRUM PG(+) 10 DRUM,1-10
DRUM PG(-) 11 DRUM,1-11
HALL V(-) 12 DRUM,1-12
DRUM MOTOR(V) 13 DRUM,1-13
DRUM MOTOR(W) 14 DRUM,1-14
DRUM MOTOR(U) 15 DRUM,1-15
CN362
DRUM MOTOR(U) 30
DRUM MOTOR(U) 29
DRUM MOTOR(W) 28
DRUM MOTOR(W) 27
DRUM MOTOR(V) 26
DRUM MOTOR(V) 25
HALL U(-) 24
DRUM PG(-) 23
DRUM PG(+) 22
HALL BIAS(+) 21
HALL U(+) 20
DRUM FG(-) 19
HALL W(-) 18
DRUM FG(+) 17
HALL W(+) 16
HALL V(-) 15
HALL BIAS(-) 14
HALL V(+) 13
REG GND 12
REG +5V 11
S REEL FG B 10
S REEL FG A 9
S REEL MOTOR(+) 8
S REEL MOTOR(+) 7
S REEL MOTOR(-) 6
S REEL MOTOR 5
SOL.VCC 4
SOL.VCC 3
TAPE END SENSOR(Y) 2
TAPE END SENSOR(X) 1
CN363
CAPSTAN DIR CONT 30
CAPSTAN DRIVE 29
UNREG GND 28
UNREG GND 27
UNREG GND 26
ADJUST 11V 25
CAPSTAN FG(A) 24
CAPSTAN FG(B) 23
UNREG +12V 22
ADJUST GND 21
S TENSION SENSOR(+) 20
S TENSION SENSOR(-) 19
ADJUST +5V 18
UNREG +8V 17
CTL HEAD(G) 16
CTL HEAD(Y) 15
CTL HEAD(X) 14
TAPE TOP SENSOR(Y) 13
TAPE TOP SENSOR(X) 12
THREADING FG 11
H;UNTH END 10
H;TH END 9
MS RESET 8
1/2 VD 7
SERVO SCK 6
SERVO SI 5
SERVO SO 4
CPU +5V 3
THREADING MOTOR(+) 2
THREADING MOTOR(-) 1
CN364
POSITION MOTOR(+) 30
POSITION MOTOR(-) 29
REG +5V 28
T REEL FG B 27
T REEL FG A 26
REG GND 25
UNREG GND 24
UNREG GND 23
T REEL MOTOR(-) 22
T REEL MOTOR(-) 21
T REEL MOTOR(+) 20
T REEL MOTOR(+) 19
T BRAKE SOL.VCC 18
L;MS BUSY 17
CC UP/DOWN CONT 1 16
CC UP/DOWN CONT 2 15
THREADING CONT 1 14
THREADING CONT 2 13
POSITION CONT 1 12
POSITION CONT 2 11
THREADING CURRENT 10
POSITION CURRENT 9
CC UP/DOWN CURRENT 8
T BRAKE CURRENT 7
REG GND 6
REG +5V 5
CC UP/DOWN MOTOR(+) 4
CC UP/DOWN MOTOR(-) 3
UNREG GND 2
UNREG +12V 1
DR-214
CN301
1 DRUM MOTOR(U)
2 DRUM MOTOR(U)
3 DRUM MOTOR(W)
4 DRUM MOTOR(W)
5 DRUM MOTOR(V)
6 DRUM MOTOR(V)
7 HALL U(-)
8 DRUM PG(-)
9 DRUM PG(+)
10 HALL BIAS(+)
11 HALL U(+)
12 DRUM FG(-)
13 HALL W(-)
14 DRUM FG(-)
15 HALL W(+)
16 HALL V(-)
17 HALL BIAS(-)
18 HALL V(+)
19 REG GND
20 REG +5V
21 S REEL FG B
22 S REEL FG A
23 S REEL MOTOR(+)
24 S REEL MOTOR(+)
25 S REEL MOTOR(-)
26 S REEL MOTOR
27 SOL.VCC
28 SOL.VCC
29 TAPE END SENSOR(Y)
30 TAPE END SENSOR(X)
CN302
1 CAPSTAN DIR CONT
2 CAPSTAN DRIVE
3 UNREG GND
4 UNREG GND
5 UNREG GND
6 ADJUST 11V
7 CAPSTAN FG(A)
8 CAPSTAN FG(B)
9 UNREG +12V
10 ADJUST GND
11 S TENSION SENSOR(+)
12 S TENSION SENSOR(-)
13 ADJUST +5V
14 UNREG +8V
15 CTL HEAD(G)
16 CTL HEAD(Y)
17 CTL HEAD(X)
18 TAPE TOP SENSOR(Y)
19 TAPE TOP SENSOR(X)
20 THREADING FG
21 H;UNTH END
22 H;TH END
23 MS RESET
24 1/2 VD
25 SERVO SCK
26 SERVO SI
27 SERVO SO
28 CPU +5V
29 THREADING MOTOR(+)
30 THREADING MOTOR(-)
CN303
1 POSITION MOTOR(+)
2 POSITION MOTOR(-)
3 REG +5V
4 T REEL FG B
5 T REEL FG A
6 REG GND
7 UNREG GND
8 UNREG GND
9 T REEL MOTOR(-)
10 T REEL MOTOR(-)
11 T REEL MOTOR(+)
12 T REEL MOTOR(+)
13 T BRAKE SOL.VCC
14 L;MS BUSY
15 CC UP/DOWN CONT 1
16 CC UP/DOWN CONT 2
17 THREADING CONT 1
18 THREADING CONT 2
19 POSITION CONT 1
20 POSITION CONT 2
21 THREADING CURRENT
22 POSITION CURRENT
23 CC UP/DOWN CURRENT
24 T BRAKE CURRENT
25 REG GND
26 REG +5V
27 CC UP/DOWN MOTOR(+)
28 CC UP/DOWN MOTOR(-)
29 UNREG GND
30 UNREG +12V
CN300
A B
REG GND REG GND 1
REG -5V REG -5V 2
UNREG +6V UNREG +6V 3
REG +5V REG +5V 4
DR GND OR GND 5
DR GND OR GND 6
UNREG +12V UNREG +12V 7
UNREG +12V UNREG +12V 8
UNREG -12V UNREG -12V 9
NC DRUM ERROR 10
NC DRUM CURRENT 11
NC CAPSTAN ERROR 12
NC CAPSTAN CURRENT 13
NC S REEL POWER CONT 14
NC S REEL ERROR 15
NC S REEL CURRENT 16
NC SOL CURRENT 17
NC DRUM FG 18
NC DRUM PG 19
NC S REEL FG B 20
NC S REEL FG A 21
NC L;TAPE END 22
NC CAPSTAN DIR CONT 23
NC CAPSTAN FG A 24
NC CAPSTAN FG B 25
NC ADJUST +11V 26
NC CAPSTAN FG A NORM 27
NC CAPSTAN FG B NORM 28
NC ADJUST GND 29
NC S TENSION 30
NC ADJUST +5V 31
NC H;CTL GAIN UP 32
NC CTL SIO 33
NC CTL PULSE 34
NC REC CTL 35
NC H;CTL REC 36
NC L;TAPE TOP 37
NC THREADING FG 38
NC H;UNTH END 39
NC H;TH END 40
NC EMERGENCY MS RESET 41
NC 1/2 VO 42
NC SERVO SCK 43
NC SERVO S1 44
NC SERVO S0 45
NC T REEL FG B 46
NC T REEL FG A 47
T REEL POWER CONT L;MS BUSY 48
T REEL ERROR TH/UNTH POWER CONT 49
T REEL CURRENT THREADING ERROR 50
CN214
A B
1 REG GND REG GND
2 REG -5V REG -5V
3 UNREG +6V UNREG +6V
4 REG +5V REG +5V
5 DR GND OR GND
6 DR GND OR GND
7 UNREG +12V UNREG +12V
8 UNREG +12V UNREG +12V
9 UNREG -12V UNREG -12V
10 NC DRUM ERROR
11 NC DRUM CURRENT
12 NC CAPSTAN ERROR
13 NC CAPSTAN CURRENT
14 NC S REEL POWER CONT
15 NC S REEL ERROR
16 NC S REEL CURRENT
17 NC SOL CURRENT
18 NC DRUM FG
19 NC DRUM PG
20 NC S REEL FG B
21 NC S REEL FG A
22 NC L;TAPE END
23 NC CAPSTAN DIR CONT
24 NC CAPSTAN FG A
25 NC CAPSTAN FG B
26 NC ADJUST +11V
27 NC CAPSTAN FG A NORM
28 NC CAPSTAN FG B NORM
29 NC ADJUST GND
30 NC S TENSION
31 NC ADJUST +5V
32 NC H;CTL GAIN UP
33 NC CTL SIO
34 NC CTL PULSE
35 NC REC CTL
36 NC H;CTL REC
37 NC L;TAPE TOP
38 NC THREADING FG
39 NC H;UNTH END
40 NC H;TH END
41 NC EMERGENCY MS RESET
42 NC 1/2 VO
43 NC SERVO SCK
44 NC SERVO S1
45 NC SERVO S0
46 NC T REEL FG B
47 NC T REEL FG A
48 T REEL POWER CONT L;MS BUSY
49 T REEL ERROR TH/UNTH POWER CONT
50 T REEL CURRENT THREADING ERROR
CN200
9 UNREG REG 201-9
8 UNREG +12V 201-8
7 UNREG -12V 201-7
6 UNREG -6V 201-6
5 REG -5V 201-5
4 UNREG +6V 201-4
3 REG +5V 201-3
2 REG GND 201-1・2
1 DR GND 214-5・6
MB-520/520P(1/2)
CN201
1 DR GND
2 REG GND
3 REG +5V
4 UNREG +6V
5 REG -5V
6 UNREG -6V
7 UNREG -12V
8 UNREG +12V
9 UNREG GND
CN101
AC(N) 1
NC 2
NC 3
NC 4
AC(L) 5
S1001
POWER
SN
CN102
AC(L) 4
NC 3
NC 2
AC(N) 1
CN1001
AC INLET
(MALE)
⚠ SW REG
FRAME(1/2)
UVW-1400 (J) ;#10001-
UVW-1400 (UC);#10001-
UVW-1400P(EK);#10001-

FRAME(2/2)

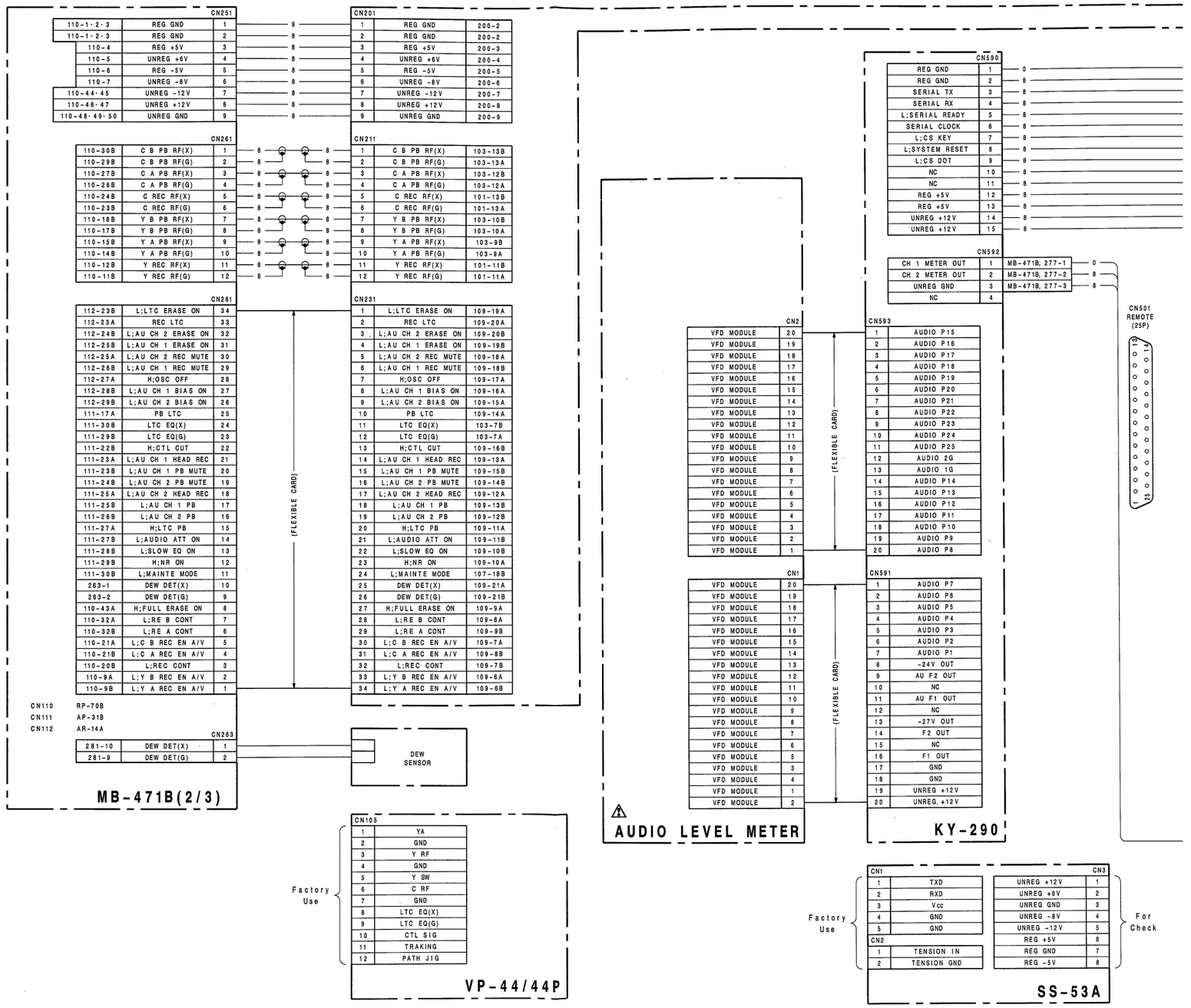
CN251
110-1·2·3 REG GND 1
110-1·2·3 REG GND 2
110-4 REG +5V 3
110-5 UNREG +6V 4
110-6 REG -5V 5
110-7 UNREG -8V 6
110-44·45 UNREG -12V 7
110-46·47 UNREG +12V 8
110-48·49·50 UNREG GND 9
CN201
1 REG GND 200-2
2 REG GND 200-2
3 REG +5V 200-3
4 UNREG +6V 200-4
5 REG -5V 200-5
6 UNREG -8V 200-6
7 UNREG -12V 200-7
8 UNREG +12V 200-8
9 UNREG GND 200-9
CN261
110-30B C B PB RF(X) 1
110-29B C B PB RF(G) 2
110-27B C A PB RF(X) 3
110-26B C A PB RF(G) 4
110-24B C REC RF(X) 5
110-23B C REC RF(G) 6
110-18B Y B PB RF(X) 7
110-17B Y B PB RF(G) 8
110-15B Y A PB RF(X) 9
110-14B Y A PB RF(G) 10
110-12B Y REC RF(X) 11
110-11B Y REC RF(G) 12
CN211
1 C B PB RF(X) 103-13B
2 C B PB RF(G) 103-13A
3 C A PB RF(X) 103-12B
4 C A PB RF(G) 103-12A
5 C REC RF(X) 101-13B
6 C REC RF(G) 101-13A
7 Y B PB RF(X) 103-10B
8 Y B PB RF(G) 103-10A
9 Y A PB RF(X) 103-9B
10 Y A PB RF(G) 103-9A
11 Y REC RF(X) 101-11B
12 Y REC RF(G) 101-11A
CN281
112-23B L;LTC ERASE ON 34
112-23A REC LTC 33
112-24B L;AU CH 2 ERASE ON 32
112-25B L;AU CH 1 ERASE ON 31
112-25A L;AU CH 2 REC MUTE 30
112-26B L;AU CH 1 REC MUTE 29
112-27A H;OSC OFF 28
112-28B L;AU CH 1 BIAS ON 27
112-29B L;AU CH 2 BIAS ON 26
111-17A PB LTC 25
111-30B LTC EQ(X) 24
111-29B LTC EQ(G) 23
111-22B H;CTL CUT 22
111-23A L;AU CH 1 HEAD REC 21
111-23B L;AU CH 1 PB MUTE 20
111-24B L;AU CH 2 PB MUTE 19
111-25A L;AU CH 2 HEAD REC 18
111-25B L;AU CH 1 PB 17
111-26B L;AU CH 2 PB 16
111-27A H;LTC PB 15
111-27B L;AUDIO ATT ON 14
111-28B L;SLOW EQ ON 13
111-29B H;NR ON 12
111-30B L;MAINTE MODE 11
263-1 DEW DET(X) 10
263-2 DEW DET(G) 9
110-43A H;FULL ERASE ON 8
110-32A L;RE B CONT 7
110-32B L;RE A CONT 6
110-21A L;C B REC EN A/V 5
110-21B L;C A REC EN A/V 4
110-20B L;REC CONT 3
110-9A L;Y B REC EN A/V 2
110-9B L;Y A REC EN A/V 1
CN231
1 L;LTC ERASE ON 109-19A
2 REC LTC 109-20A
3 L;AU CH 2 ERASE ON 109-20B
4 L;AU CH 1 ERASE ON 109-19B
5 L;AU CH 2 REC MUTE 109-18A
6 L;AU CH 1 REC MUTE 109-18B
7 H;OSC OFF 109-17A
8 L;AU CH 1 BIAS ON 109-16A
9 L;AU CH 2 BIAS ON 109-15A
10 PB LTC 109-14A
11 LTC EQ(X) 103-7B
12 LTC EQ(G) 103-7A
13 H;CTL CUT 109-16B
14 L;AU CH 1 HEAD REC 109-13A
15 L;AU CH 1 PB MUTE 109-15B
16 L;AU CH 2 PB MUTE 109-14B
17 L;AU CH 2 HEAD REC 109-12A
18 L;AU CH 1 PB 109-13B
19 L;AU CH 2 PB 109-12B
20 H;LTC PB 109-11A
21 L;AUDIO ATT ON 109-11B
22 L;SLOW EQ ON 109-10B
23 H;NR ON 109-10A
24 L;MAINTE MODE 107-18B
25 DEW DET(X) 109-21A
26 DEW DET(G) 109-21B
27 H;FULL ERASE ON 109-9A
28 L;RE B CONT 109-8A
29 L;RE A CONT 109-9B
30 L;C B REC EN A/V 109-7A
31 L;C A REC EN A/V 109-8B
32 L;REC CONT 109-7B
33 L;Y B REC EN A/V 109-6A
34 L;Y A REC EN A/V 109-6B
(FLEXIBLE CARD)
CN110 RP-70B
CN111 AP-31B
CN112 AR-14A
CN263
281-10 DEW DET(X) 1
281-9 DEW DET(G) 2
DEW SENSOR
MB-471B(2/3)
CN105
1 YA
2 GND
3 Y RF
4 GND
5 Y SW
6 C RF
7 GND
8 LTC EQ(X)
9 LTC EQ(G)
10 CTL SIG
11 TRAKING
12 PATH JIG
Factory Use
VP-44/44P
CN590
REG GND 1
REG GND 2
SERIAL TX 3
SERIAL RX 4
L;SERIAL READY 5
SERIAL CLOCK 6
L;CS KEY 7
L;SYSTEM RESET 8
L;CS DOT 9
NC 10
NC 11
REG +5V 12
REG +5V 13
UNREG +12V 14
UNREG +12V 15
CN592
CH 1 METER OUT 1 MB-471B, 277-1
CH 2 METER OUT 2 MB-471B, 277-2
UNREG GND 3 MB-471B, 277-3
NC 4
CN501 REMOTE (25P)
CN2
VFD MODULE 20
VFD MODULE 19
VFD MODULE 18
VFD MODULE 17
VFD MODULE 16
VFD MODULE 15
VFD MODULE 14
VFD MODULE 13
VFD MODULE 12
VFD MODULE 11
VFD MODULE 10
VFD MODULE 9
VFD MODULE 8
VFD MODULE 7
VFD MODULE 6
VFD MODULE 5
VFD MODULE 4
VFD MODULE 3
VFD MODULE 2
VFD MODULE 1
CN1
VFD MODULE 20
VFD MODULE 19
VFD MODULE 18
VFD MODULE 17
VFD MODULE 16
VFD MODULE 15
VFD MODULE 14
VFD MODULE 13
VFD MODULE 12
VFD MODULE 11
VFD MODULE 10
VFD MODULE 9
VFD MODULE 8
VFD MODULE 7
VFD MODULE 6
VFD MODULE 5
VFD MODULE 3
VFD MODULE 4
VFD MODULE 1
VFD MODULE 2
(FLEXIBLE CARD)
AUDIO LEVEL METER
CN593
1 AUDIO P15
2 AUDIO P16
3 AUDIO P17
4 AUDIO P18
5 AUDIO P19
6 AUDIO P20
7 AUDIO P21
8 AUDIO P22
9 AUDIO P23
10 AUDIO P24
11 AUDIO P25
12 AUDIO 2G
13 AUDIO 1G
14 AUDIO P14
15 AUDIO P13
16 AUDIO P12
17 AUDIO P11
18 AUDIO P10
19 AUDIO P9
20 AUDIO P8
CN591
1 AUDIO P7
2 AUDIO P6
3 AUDIO P5
4 AUDIO P4
5 AUDIO P3
6 AUDIO P2
7 AUDIO P1
8 -24V OUT
9 AU F2 OUT
10 NC
11 AU F1 OUT
12 NC
13 -27V OUT
14 F2 OUT
15 NC
16 F1 OUT
17 GND
18 GND
19 UNREG +12V
20 UNREG. +12V
KY-290
CN1
1 TXD
2 RXD
3 Vcc
4 GND
5 GND
CN2
1 TENSION IN
2 TENSION GND
CN3
UNREG +12V 1
UNREG +6V 2
UNREG GND 3
UNREG -8V 4
UNREG -12V 5
REG +5V 6
REG GND 7
REG -5V 8
Factory Use
For Check
SS-53A

FRAME (2/2)

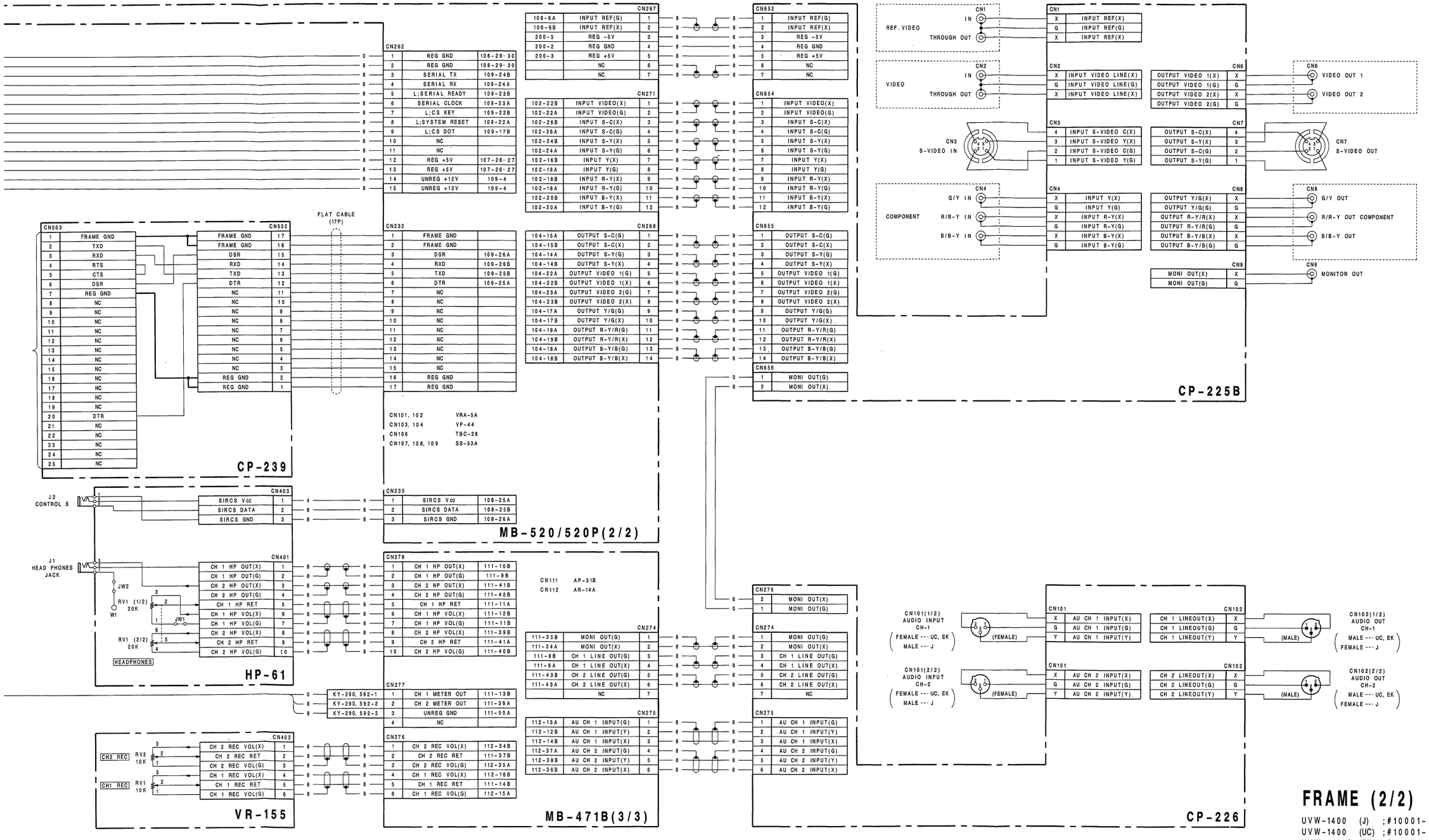

FRAME (2/2)

UVW-1400 (J) ;#10001-
UVW-1400 (UC) ;#10001-
UVW-1400P (EK) ;#10001-

FRAME(1/2)

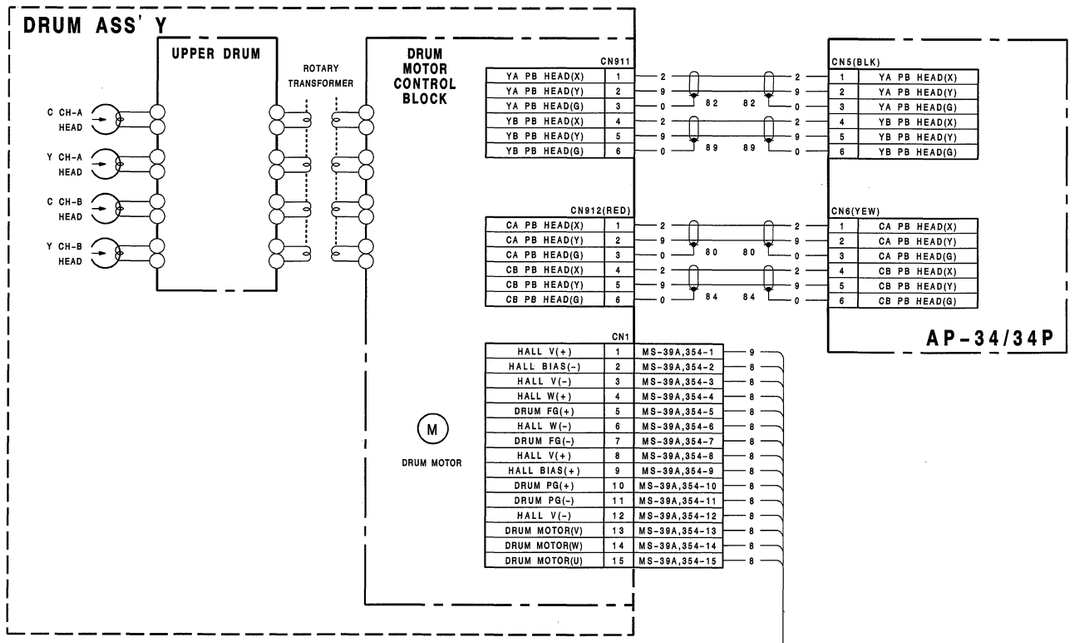
DRUM ASS' Y
UPPER DRUM
ROTARY TRANSFORMER
DRUM MOTOR CONTROL BLOCK
C CH-A HEAD
Y CH-A HEAD
C CH-B HEAD
Y CH-B HEAD
M
DRUM MOTOR
CN911
YA PB HEAD(X) 1
YA PB HEAD(Y) 2
YA PB HEAD(G) 3
YB PB HEAD(X) 4
YB PB HEAD(Y) 5
YB PB HEAD(G) 6
CN912(RED)
CA PB HEAD(X) 1
CA PB HEAD(Y) 2
CA PB HEAD(G) 3
CB PB HEAD(X) 4
CB PB HEAD(Y) 5
CB PB HEAD(G) 6
CN5(BLK)
1 YA PB HEAD(X)
2 YA PB HEAD(Y)
3 YA PB HEAD(G)
4 YB PB HEAD(X)
5 YB PB HEAD(Y)
6 YB PB HEAD(G)
CN6(YEW)
1 CA PB HEAD(X)
2 CA PB HEAD(Y)
3 CA PB HEAD(G)
4 CB PB HEAD(X)
5 CB PB HEAD(Y)
6 CB PB HEAD(G)
AP-34/34P
CN1
HALL V(+) 1 MS-39A,354-1
HALL BIAS(-) 2 MS-39A,354-2
HALL V(-) 3 MS-39A,354-3
HALL W(+) 4 MS-39A,354-4
DRUM FG(+) 5 MS-39A,354-5
HALL W(-) 6 MS-39A,354-6
DRUM FG(-) 7 MS-39A,354-7
HALL V(+) 8 MS-39A,354-8
HALL BIAS(+) 9 MS-39A,354-9
DRUM PG(+) 10 MS-39A,354-10
DRUM PG(-) 11 MS-39A,354-11
HALL V(-) 12 MS-39A,354-12
DRUM MOTOR(V) 13 MS-39A,354-13
DRUM MOTOR(W) 14 MS-39A,354-14
DRUM MOTOR(U) 15 MS-39A,354-15

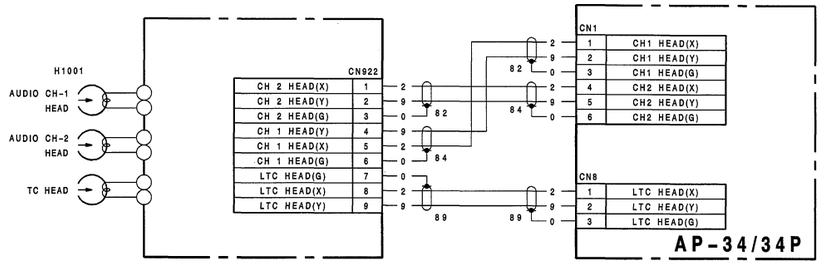
H1001
AUDIO CH-1 HEAD
AUDIO CH-2 HEAD
TC HEAD
CN922
CH 2 HEAD(X) 1
CH 2 HEAD(Y) 2
CH 2 HEAD(G) 3
CH 1 HEAD(Y) 4
CH 1 HEAD(X) 5
CH 1 HEAD(G) 6
LTC HEAD(G) 7
LTC HEAD(X) 8
LTC HEAD(Y) 9
CN1
1 CH1 HEAD(X)
2 CH1 HEAD(Y)
3 CH1 HEAD(G)
4 CH2 HEAD(X)
5 CH2 HEAD(Y)
6 CH2 HEAD(G)
CN8
1 LTC HEAD(X)
2 LTC HEAD(Y)
3 LTC HEAD(G)
AP-34/34P

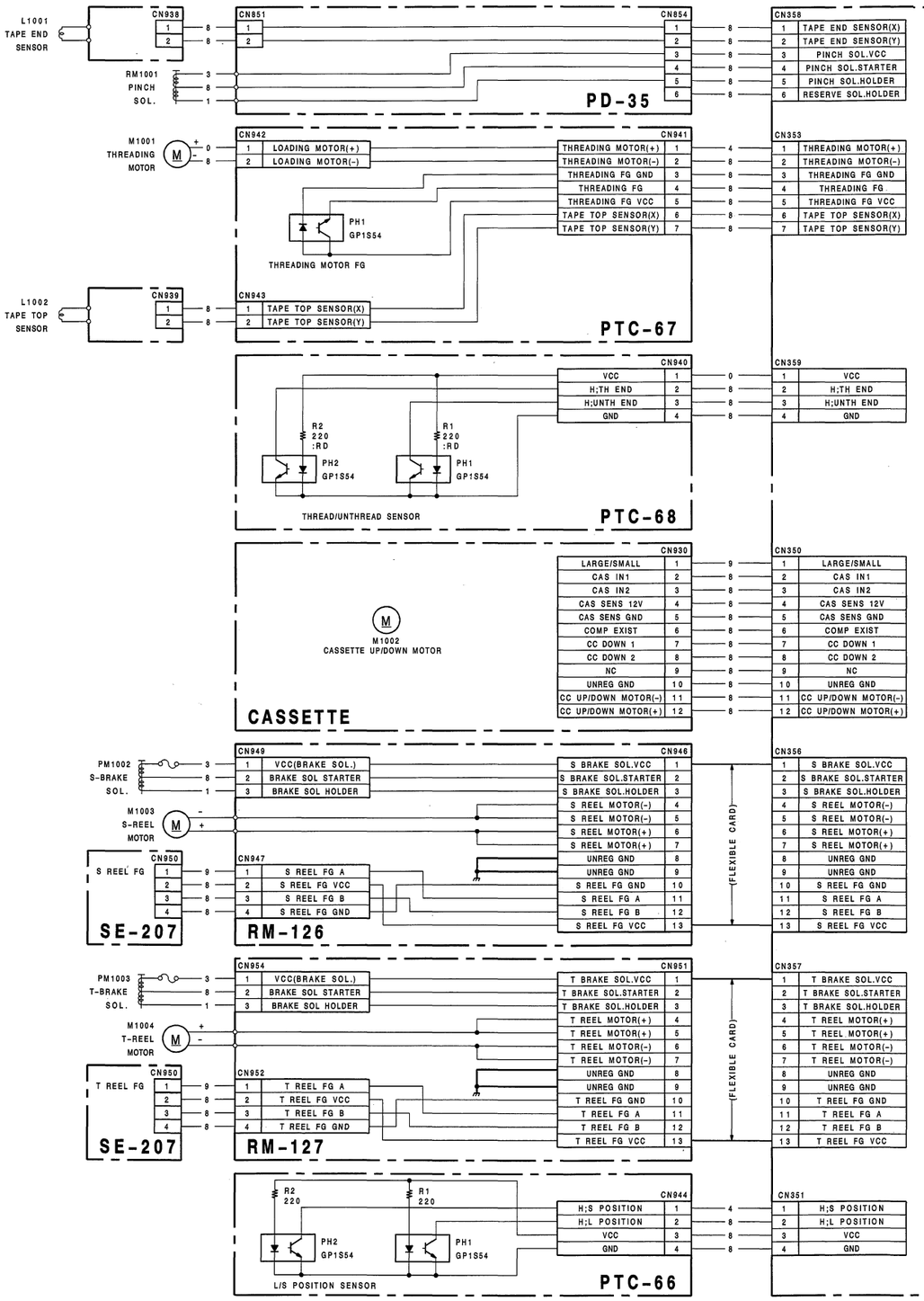
L1001 TAPE END SENSOR
CN938
CN851
CN854
CN358
1 TAPE END SENSOR(X)
2 TAPE END SENSOR(Y)
3 PINCH SOL.VCC
4 PINCH SOL.STARTER
5 PINCH SOL.HOLDER
6 RESERVE SOL.HOLDER
RM1001 PINCH SOL.
PD-35
M1001 THREADING MOTOR
CN942
1 LOADING MOTOR(+)
2 LOADING MOTOR(-)
CN941
THREADING MOTOR(+) 1
THREADING MOTOR(-) 2
THREADING FG GND 3
THREADING FG 4
THREADING FG VCC 5
TAPE TOP SENSOR(X) 6
TAPE TOP SENSOR(Y) 7
CN353
1 THREADING MOTOR(+)
2 THREADING MOTOR(-)
3 THREADING FG GND
4 THREADING FG
5 THREADING FG VCC
6 TAPE TOP SENSOR(X)
7 TAPE TOP SENSOR(Y)
PH1 GP1S54
THREADING MOTOR FG
L1002 TAPE TOP SENSOR
CN939
CN943
1 TAPE TOP SENSOR(X)
2 TAPE TOP SENSOR(Y)
PTC-67
CN940
VCC 1
H;TH END 2
H;UNTH END 3
GND 4
CN359
1 VCC
2 H;TH END
3 H;UNTH END
4 GND
R2 220 :RD
R1 220 :RD
PH2 GP1S54
PH1 GP1S54
THREAD/UNTHREAD SENSOR
PTC-68
M1002 CASSETTE UP/DOWN MOTOR
CN930
LARGE/SMALL 1
CAS IN1 2
CAS IN2 3
CAS SENS 12V 4
CAS SENS GND 5
COMP EXIST 6
CC DOWN 1 7
CC DOWN 2 8
NC 9
UNREG GND 10
CC UP/DOWN MOTOR(-) 11
CC UP/DOWN MOTOR(+) 12
CN350
1 LARGE/SMALL
2 CAS IN1
3 CAS IN2
4 CAS SENS 12V
5 CAS SENS GND
6 COMP EXIST
7 CC DOWN 1
8 CC DOWN 2
9 NC
10 UNREG GND
11 CC UP/DOWN MOTOR(-)
12 CC UP/DOWN MOTOR(+)
CASSETTE
PM1002 S-BRAKE SOL.
CN949
1 VCC(BRAKE SOL.)
2 BRAKE SOL STARTER
3 BRAKE SOL HOLDER
CN946
S BRAKE SOL.VCC 1
S BRAKE SOL.STARTER 2
S BRAKE SOL.HOLDER 3
S REEL MOTOR(-) 4
S REEL MOTOR(-) 5
S REEL MOTOR(+) 6
S REEL MOTOR(+) 7
UNREG GND 8
UNREG GND 9
S REEL FG GND 10
S REEL FG A 11
S REEL FG B 12
S REEL FG VCC 13
CN356
1 S BRAKE SOL.VCC
2 S BRAKE SOL.STARTER
3 S BRAKE SOL.HOLDER
4 S REEL MOTOR(-)
5 S REEL MOTOR(-)
6 S REEL MOTOR(+)
7 S REEL MOTOR(+)
8 UNREG GND
9 UNREG GND
10 S REEL FG GND
11 S REEL FG A
12 S REEL FG B
13 S REEL FG VCC
(FLEXIBLE CARD)
M1003 S-REEL MOTOR
CN950
S REEL FG 1 2 3 4
CN947
1 S REEL FG A
2 S REEL FG VCC
3 S REEL FG B
4 S REEL FG GND
SE-207
RM-126
PM1003 T-BRAKE SOL.
CN954
1 VCC(BRAKE SOL.)
2 BRAKE SOL STARTER
3 BRAKE SOL HOLDER
CN951
T BRAKE SOL.VCC 1
T BRAKE SOL.STARTER 2
T BRAKE SOL.HOLDER 3
T REEL MOTOR(+) 4
T REEL MOTOR(+) 5
T REEL MOTOR(-) 6
T REEL MOTOR(-) 7
UNREG GND 8
UNREG GND 9
T REEL FG GND 10
T REEL FG A 11
T REEL FG B 12
T REEL FG VCC 13
CN357
1 T BRAKE SOL.VCC
2 T BRAKE SOL.STARTER
3 T BRAKE SOL.HOLDER
4 T REEL MOTOR(+)
5 T REEL MOTOR(+)
6 T REEL MOTOR(-)
7 T REEL MOTOR(-)
8 UNREG GND
9 UNREG GND
10 T REEL FG GND
11 T REEL FG A
12 T REEL FG B
13 T REEL FG VCC
(FLEXIBLE CARD)
M1004 T-REEL MOTOR
CN950
T REEL FG 1 2 3 4
CN952
1 T REEL FG A
2 T REEL FG VCC
3 T REEL FG B
4 T REEL FG GND
SE-207
RM-127
R2 220
R1 220
PH2 GP1S54
PH1 GP1S54
L/S POSITION SENSOR
CN944
H;S POSITION 1
H;L POSITION 2
VCC 3
GND 4
CN351
1 H;S POSITION
2 H;L POSITION
3 VCC
4 GND
PTC-66

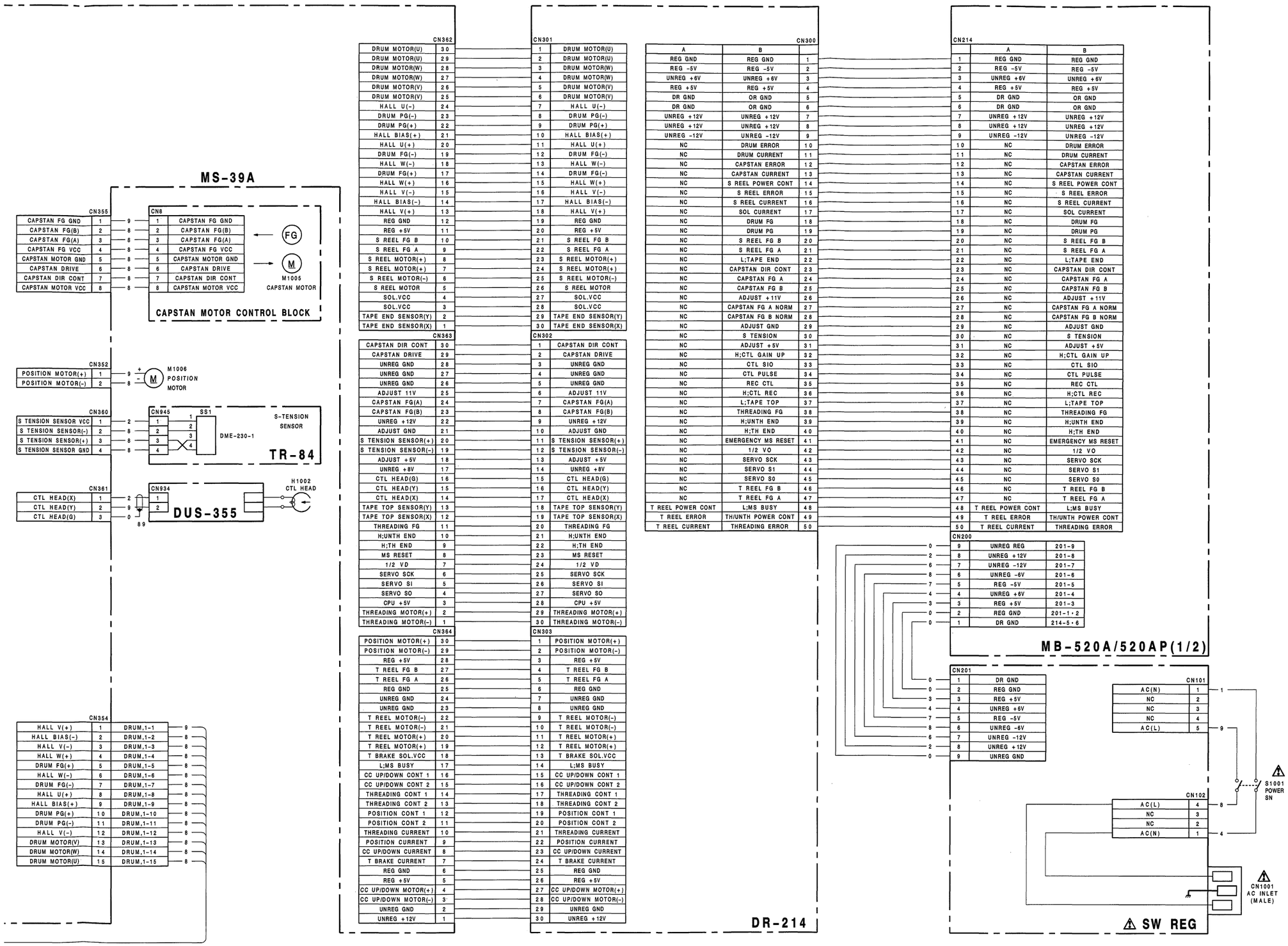
MS-39A
CN355
CAPSTAN FG GND 1
CAPSTAN FG(B) 2
CAPSTAN FG(A) 3
CAPSTAN FG VCC 4
CAPSTAN MOTOR GND 5
CAPSTAN DRIVE 6
CAPSTAN DIR CONT 7
CAPSTAN MOTOR VCC 8
CN8
1 CAPSTAN FG GND
2 CAPSTAN FG(B)
3 CAPSTAN FG(A)
4 CAPSTAN FG VCC
5 CAPSTAN MOTOR GND
6 CAPSTAN DRIVE
7 CAPSTAN DIR CONT
8 CAPSTAN MOTOR VCC
FG
M
M1005
CAPSTAN MOTOR
CAPSTAN MOTOR CONTROL BLOCK
CN352
POSITION MOTOR(+) 1
POSITION MOTOR(-) 2
M1006
POSITION MOTOR
CN360
S TENSION SENSOR VCC 1
S TENSION SENSOR(-) 2
S TENSION SENSOR(+) 3
S TENSION SENSOR GND 4
CN945
SS1
DME-230-1
S-TENSION SENSOR
TR-84
CN361
CTL HEAD(X) 1
CTL HEAD(Y) 2
CTL HEAD(G) 3
CN934
DUS-355
H1002
CTL HEAD
CN354
HALL V(+) 1 DRUM,1-1
HALL BIAS(-) 2 DRUM,1-2
HALL V(-) 3 DRUM,1-3
HALL W(+) 4 DRUM,1-4
DRUM FG(+) 5 DRUM,1-5
HALL W(-) 6 DRUM,1-6
DRUM FG(-) 7 DRUM,1-7
HALL U(+) 8 DRUM,1-8
HALL BIAS(+) 9 DRUM,1-9
DRUM PG(+) 10 DRUM,1-10
DRUM PG(-) 11 DRUM,1-11
HALL V(-) 12 DRUM,1-12
DRUM MOTOR(V) 13 DRUM,1-13
DRUM MOTOR(W) 14 DRUM,1-14
DRUM MOTOR(U) 15 DRUM,1-15
CN362
DRUM MOTOR(U) 30
DRUM MOTOR(U) 29
DRUM MOTOR(W) 28
DRUM MOTOR(W) 27
DRUM MOTOR(V) 26
DRUM MOTOR(V) 25
HALL U(-) 24
DRUM PG(-) 23
DRUM PG(+) 22
HALL BIAS(+) 21
HALL U(+) 20
DRUM FG(-) 19
HALL W(-) 18
DRUM FG(+) 17
HALL W(+) 16
HALL V(-) 15
HALL BIAS(-) 14
HALL V(+) 13
REG GND 12
REG +5V 11
S REEL FG B 10
S REEL FG A 9
S REEL MOTOR(+) 8
S REEL MOTOR(-) 7
S REEL MOTOR 5
SOL.VCC 4
SOL.VCC 3
TAPE END SENSOR(Y) 2
TAPE END SENSOR(X) 1
CN363
CAPSTAN DIR CONT 30
CAPSTAN DRIVE 29
UNREG GND 28
UNREG GND 27
UNREG GND 26
ADJUST 11V 25
CAPSTAN FG(A) 24
CAPSTAN FG(B) 23
UNREG +12V 22
ADJUST GND 21
S TENSION SENSOR(+) 20
S TENSION SENSOR(-) 19
ADJUST +5V 18
UNREG +8V 17
CTL HEAD(G) 16
CTL HEAD(Y) 15
CTL HEAD(X) 14
TAPE TOP SENSOR(Y) 13
TAPE TOP SENSOR(X) 12
THREADING FG 11
H;UNTH END 10
H;TH END 9
MS RESET 8
1/2 VD 7
SERVO SCK 6
SERVO SI 5
SERVO SO 4
CPU +5V 3
THREADING MOTOR(+) 2
THREADING MOTOR(-) 1
CN364
POSITION MOTOR(+) 30
POSITION MOTOR(-) 29
REG +5V 28
T REEL FG B 27
T REEL FG A 26
REG GND 25
UNREG GND 24
UNREG GND 23
T REEL MOTOR(-) 22
T REEL MOTOR(-) 21
T REEL MOTOR(+) 20
T REEL MOTOR(+) 19
T BRAKE SOL.VCC 18
L;MS BUSY 17
CC UP/DOWN CONT 1 16
CC UP/DOWN CONT 2 15
THREADING CONT 1 14
THREADING CONT 2 13
POSITION CONT 1 12
POSITION CONT 2 11
THREADING CURRENT 10
POSITION CURRENT 9
CC UP/DOWN CURRENT 8
T BRAKE CURRENT 7
REG GND 6
REG +5V 5
CC UP/DOWN MOTOR(+) 4
CC UP/DOWN MOTOR(-) 3
UNREG GND 2
UNREG +12V 1
CN301
1 DRUM MOTOR(U)
2 DRUM MOTOR(U)
3 DRUM MOTOR(W)
4 DRUM MOTOR(W)
5 DRUM MOTOR(V)
6 DRUM MOTOR(V)
7 HALL U(-)
8 DRUM PG(-)
9 DRUM PG(+)
10 HALL BIAS(+)
11 HALL U(+)
12 DRUM FG(-)
13 HALL W(-)
14 DRUM FG(-)
15 HALL W(+)
16 HALL V(-)
17 HALL BIAS(-)
18 HALL V(+)
19 REG GND
20 REG +5V
21 S REEL FG B
22 S REEL FG A
23 S REEL MOTOR(+)
24 S REEL MOTOR(+)
25 S REEL MOTOR(-)
26 S REEL MOTOR
27 SOL.VCC
28 SOL.VCC
29 TAPE END SENSOR(Y)
30 TAPE END SENSOR(X)
CN302
1 CAPSTAN DIR CONT
2 CAPSTAN DRIVE
3 UNREG GND
4 UNREG GND
5 UNREG GND
6 ADJUST 11V
7 CAPSTAN FG(A)
8 CAPSTAN FG(B)
9 UNREG +12V
10 ADJUST GND
11 S TENSION SENSOR(+)
12 S TENSION SENSOR(-)
13 ADJUST +5V
14 UNREG +8V
15 CTL HEAD(G)
16 CTL HEAD(Y)
17 CTL HEAD(X)
18 TAPE TOP SENSOR(Y)
19 TAPE TOP SENSOR(X)
20 THREADING FG
21 H;UNTH END
22 H;TH END
23 MS RESET
24 1/2 VD
25 SERVO SCK
26 SERVO SI
27 SERVO SO
28 CPU +5V
29 THREADING MOTOR(+)
30 THREADING MOTOR(-)
CN303
1 POSITION MOTOR(+)
2 POSITION MOTOR(-)
3 REG +5V
4 T REEL FG B
5 T REEL FG A
6 REG GND
7 UNREG GND
8 UNREG GND
9 T REEL MOTOR(-)
10 T REEL MOTOR(-)
11 T REEL MOTOR(+)
12 T REEL MOTOR(+)
13 T BRAKE SOL.VCC
14 L;MS BUSY
15 CC UP/DOWN CONT 1
16 CC UP/DOWN CONT 2
17 THREADING CONT 1
18 THREADING CONT 2
19 POSITION CONT 1
20 POSITION CONT 2
21 THREADING CURRENT
22 POSITION CURRENT
23 CC UP/DOWN CURRENT
24 T BRAKE CURRENT
25 REG GND
26 REG +5V
27 CC UP/DOWN MOTOR(+)
28 CC UP/DOWN MOTOR(-)
29 UNREG GND
30 UNREG +12V
DR-214
CN300
A B
REG GND REG GND 1
REG -5V REG -5V 2
UNREG +6V UNREG +6V 3
REG +5V REG +5V 4
DR GND OR GND 5
DR GND OR GND 6
UNREG +12V UNREG +12V 7
UNREG +12V UNREG +12V 8
UNREG -12V UNREG -12V 9
NC DRUM ERROR 10
NC DRUM CURRENT 11
NC CAPSTAN ERROR 12
NC CAPSTAN CURRENT 13
NC S REEL POWER CONT 14
NC S REEL ERROR 15
NC S REEL CURRENT 16
NC SOL CURRENT 17
NC DRUM FG 18
NC DRUM PG 19
NC S REEL FG B 20
NC S REEL FG A 21
NC L;TAPE END 22
NC CAPSTAN DIR CONT 23
NC CAPSTAN FG A 24
NC CAPSTAN FG B 25
NC ADJUST +11V 26
NC CAPSTAN FG A NORM 27
NC CAPSTAN FG B NORM 28
NC ADJUST GND 29
NC S TENSION 30
NC ADJUST +5V 31
NC H;CTL GAIN UP 32
NC CTL SIO 33
NC CTL PULSE 34
NC REC CTL 35
NC H;CTL REC 36
NC L;TAPE TOP 37
NC THREADING FG 38
NC H;UNTH END 39
NC H;TH END 40
NC EMERGENCY MS RESET 41
NC 1/2 VO 42
NC SERVO SCK 43
NC SERVO S1 44
NC SERVO S0 45
NC T REEL FG B 46
NC T REEL FG A 47
T REEL POWER CONT L;MS BUSY 48
T REEL ERROR TH/UNTH POWER CONT 49
T REEL CURRENT THREADING ERROR 50
CN214
A B
1 REG GND REG GND
2 REG -5V REG -5V
3 UNREG +6V UNREG +6V
4 REG +5V REG +5V
5 DR GND OR GND
6 DR GND OR GND
7 UNREG +12V UNREG +12V
8 UNREG +12V UNREG +12V
9 UNREG -12V UNREG -12V
10 NC DRUM ERROR
11 NC DRUM CURRENT
12 NC CAPSTAN ERROR
13 NC CAPSTAN CURRENT
14 NC S REEL POWER CONT
15 NC S REEL ERROR
16 NC S REEL CURRENT
17 NC SOL CURRENT
18 NC DRUM FG
19 NC DRUM PG
20 NC S REEL FG B
21 NC S REEL FG A
22 NC L;TAPE END
23 NC CAPSTAN DIR CONT
24 NC CAPSTAN FG A
25 NC CAPSTAN FG B
26 NC ADJUST +11V
27 NC CAPSTAN FG A NORM
28 NC CAPSTAN FG B NORM
29 NC ADJUST GND
30 NC S TENSION
31 NC ADJUST +5V
32 NC H;CTL GAIN UP
33 NC CTL SIO
34 NC CTL PULSE
35 NC REC CTL
36 NC H;CTL REC
37 NC L;TAPE TOP
38 NC THREADING FG
39 NC H;UNTH END
40 NC H;TH END
41 NC EMERGENCY MS RESET
42 NC 1/2 VO
43 NC SERVO SCK
44 NC SERVO S1
45 NC SERVO S0
46 NC T REEL FG B
47 NC T REEL FG A
48 T REEL POWER CONT L;MS BUSY
49 T REEL ERROR TH/UNTH POWER CONT
50 T REEL CURRENT THREADING ERROR
CN200
9 UNREG REG 201-9
8 UNREG +12V 201-8
7 UNREG -12V 201-7
6 UNREG -6V 201-6
5 REG -5V 201-5
4 UNREG +6V 201-4
3 REG +5V 201-3
2 REG GND 201-1・2
1 DR GND 214-5・6
MB-520A/520AP(1/2)
CN201
1 DR GND
2 REG GND
3 REG +5V
4 UNREG +6V
5 REG -5V
6 UNREG -6V
7 UNREG -12V
8 UNREG +12V
9 UNREG GND
CN101
AC(N) 1
NC 2
NC 3
NC 4
AC(L) 5
CN102
AC(L) 4
NC 3
NC 2
AC(N) 1
S1001
POWER
SW
CN1001
AC INLET
(MALE)
SW REG
FRAME(1/2)
UVW-1200 (J) ;#10001-
UVW-1200 (UC);#10001-
UVW-1200P(EK);#10001-

FRAME(2/2)

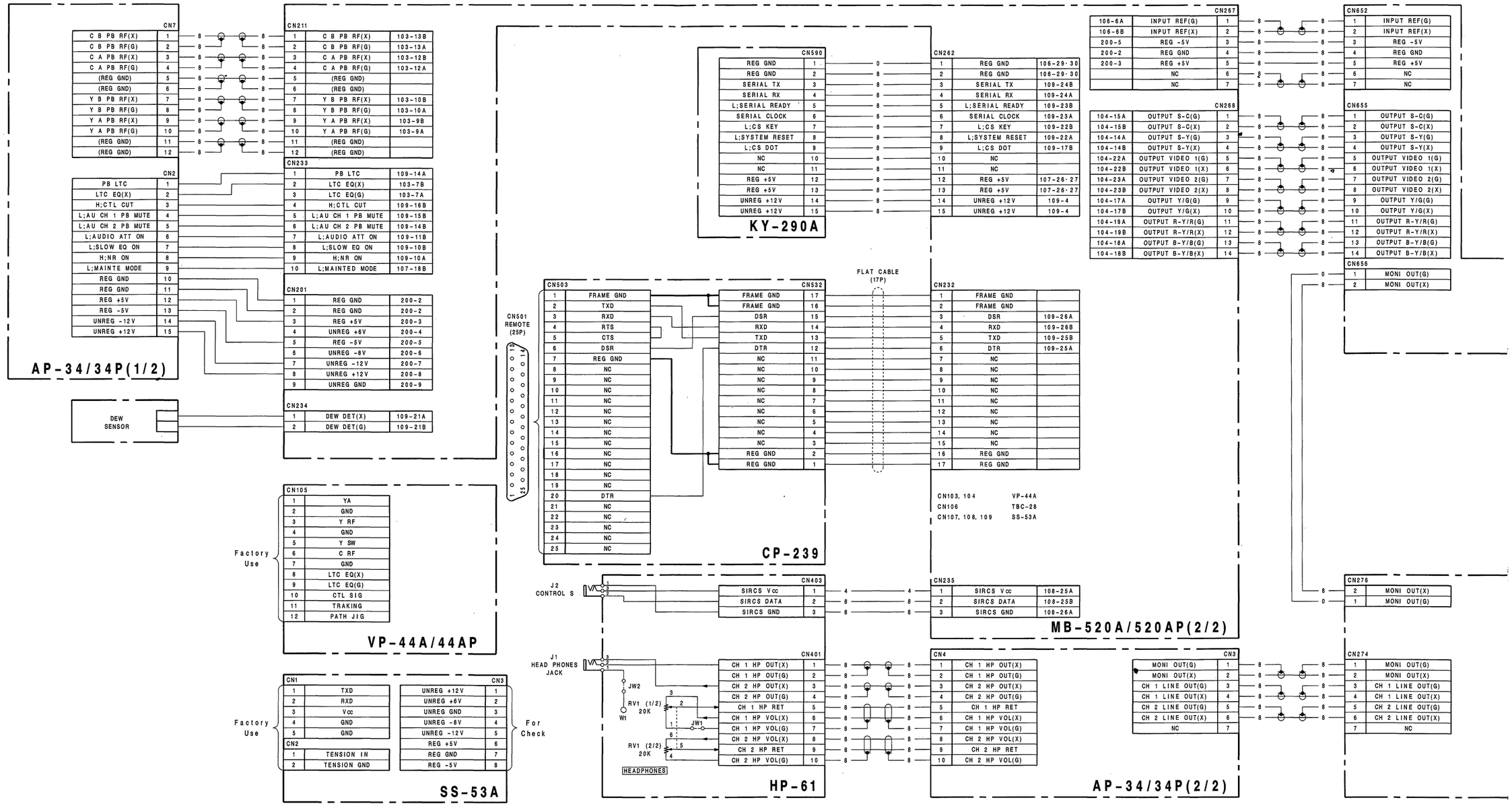
CN7
C B PB RF(X) 1
C B PB RF(G) 2
C A PB RF(X) 3
C A PB RF(G) 4
(REG GND) 5
(REG GND) 6
Y B PB RF(X) 7
Y B PB RF(G) 8
Y A PB RF(X) 9
Y A PB RF(G) 10
(REG GND) 11
(REG GND) 12
CN211
1 C B PB RF(X) 103-13B
2 C B PB RF(G) 103-13A
3 C A PB RF(X) 103-12B
4 C A PB RF(G) 103-12A
5 (REG GND)
6 (REG GND)
7 Y B PB RF(X) 103-10B
8 Y B PB RF(G) 103-10A
9 Y A PB RF(X) 103-9B
10 Y A PB RF(G) 103-9A
11 (REG GND)
12 (REG GND)
CN2
PB LTC 1
LTC EQ(X) 2
H;CTL CUT 3
L;AU CH 1 PB MUTE 4
L;AU CH 2 PB MUTE 5
L;AUDIO ATT ON 6
L;SLOW EQ ON 7
H;NR ON 8
L;MAINTE MODE 9
REG GND 10
REG GND 11
REG +5V 12
REG -5V 13
UNREG -12V 14
UNREG +12V 15
CN233
1 PB LTC 109-14A
2 LTC EQ(X) 103-7B
3 LTC EQ(G) 103-7A
4 H;CTL CUT 109-16B
5 L;AU CH 1 PB MUTE 109-15B
6 L;AU CH 2 PB MUTE 109-14B
7 L;AUDIO ATT ON 109-11B
8 L;SLOW EQ ON 109-10B
9 H;NR ON 109-10A
10 L;MAINTED MODE 107-18B
CN201
1 REG GND 200-2
2 REG GND 200-2
3 REG +5V 200-3
4 UNREG +6V 200-4
5 REG -5V 200-5
6 UNREG -8V 200-6
7 UNREG -12V 200-7
8 UNREG +12V 200-8
9 UNREG GND 200-9
CN234
1 DEW DET(X) 109-21A
2 DEW DET(G) 109-21B
AP-34/34P(1/2)
DEW SENSOR
CN590
REG GND 1
REG GND 2
SERIAL TX 3
SERIAL RX 4
L;SERIAL READY 5
SERIAL CLOCK 6
L;CS KEY 7
L;SYSTEM RESET 8
L;CS DOT 9
NC 10
NC 11
REG +5V 12
REG +5V 13
UNREG +12V 14
UNREG +12V 15
KY-290A
CN262
1 REG GND 106-29-30
2 REG GND 106-29-30
3 SERIAL TX 109-24B
4 SERIAL RX 109-24A
5 L;SERIAL READY 109-23B
6 SERIAL CLOCK 109-23A
7 L;CS KEY 109-22B
8 L;SYSTEM RESET 109-22A
9 L;CS DOT 109-17B
10 NC
11 NC
12 REG +5V 107-26-27
13 REG +5V 107-26-27
14 UNREG +12V 109-4
15 UNREG +12V 109-4
FLAT CABLE (17P)
CN503
1 FRAME GND
2 TXD
3 RXD
4 RTS
5 CTS
6 DSR
7 REG GND
8 NC
9 NC
10 NC
11 NC
12 NC
13 NC
14 NC
15 NC
16 NC
17 NC
18 NC
19 NC
20 DTR
21 NC
22 NC
23 NC
24 NC
25 NC
CN501 REMOTE (25P)
CN532
FRAME GND 17
FRAME GND 16
DSR 15
RXD 14
TXD 13
DTR 12
NC 11
NC 10
NC 9
NC 8
NC 7
NC 6
NC 5
NC 4
NC 3
REG GND 2
REG GND 1
CP-239
CN232
1 FRAME GND
2 FRAME GND
3 DSR 109-26A
4 RXD 109-26B
5 TXD 109-25B
6 DTR 109-25A
7 NC
8 NC
9 NC
10 NC
11 NC
12 NC
13 NC
14 NC
15 NC
16 REG GND
17 REG GND
CN103, 104 VP-44A
CN106 TBC-28
CN107, 108, 109 SS-53A
CN267
106-6A INPUT REF(G) 1
106-6B INPUT REF(X) 2
200-5 REG -5V 3
200-2 REG GND 4
200-3 REG +5V 5
NC 6
NC 7
CN268
104-15A OUTPUT S-C(G) 1
104-15B OUTPUT S-C(X) 2
104-14A OUTPUT S-Y(G) 3
104-14B OUTPUT S-Y(X) 4
104-22A OUTPUT VIDEO 1(G) 5
104-22B OUTPUT VIDEO 1(X) 6
104-23A OUTPUT VIDEO 2(G) 7
104-23B OUTPUT VIDEO 2(X) 8
104-17A OUTPUT Y/G(G) 9
104-17B OUTPUT Y/G(X) 10
104-19A OUTPUT R-Y/R(G) 11
104-19B OUTPUT R-Y/R(X) 12
104-18A OUTPUT B-Y/B(G) 13
104-18B OUTPUT B-Y/B(X) 14
CN652
1 INPUT REF(G)
2 INPUT REF(X)
3 REG -5V
4 REG GND
5 REG +5V
6 NC
7 NC
CN655
1 OUTPUT S-C(G)
2 OUTPUT S-C(X)
3 OUTPUT S-Y(G)
4 OUTPUT S-Y(X)
5 OUTPUT VIDEO 1(G)
6 OUTPUT VIDEO 1(X)
7 OUTPUT VIDEO 2(G)
8 OUTPUT VIDEO 2(X)
9 OUTPUT Y/G(G)
10 OUTPUT Y/G(X)
11 OUTPUT R-Y/R(G)
12 OUTPUT R-Y/R(X)
13 OUTPUT B-Y/B(G)
14 OUTPUT B-Y/B(X)
CN656
1 MONI OUT(G)
2 MONI OUT(X)
MB-520A/520AP(2/2)
CN276
2 MONI OUT(X)
1 MONI OUT(G)
CN274
1 MONI OUT(G)
2 MONI OUT(X)
3 CH 1 LINE OUT(G)
4 CH 1 LINE OUT(X)
5 CH 2 LINE OUT(G)
6 CH 2 LINE OUT(X)
7 NC
CN3
MONI OUT(G) 1
MONI OUT(X) 2
CH 1 LINE OUT(G) 3
CH 1 LINE OUT(X) 4
CH 2 LINE OUT(G) 5
CH 2 LINE OUT(X) 6
NC 7
CN4
1 CH 1 HP OUT(X)
2 CH 1 HP OUT(G)
3 CH 2 HP OUT(X)
4 CH 2 HP OUT(G)
5 CH 1 HP RET
6 CH 1 HP VOL(X)
7 CH 1 HP VOL(G)
8 CH 2 HP VOL(X)
9 CH 2 HP RET
10 CH 2 HP VOL(G)
AP-34/34P(2/2)
CN235
1 SIRCS Vcc 108-25A
2 SIRCS DATA 108-25B
3 SIRCS GND 108-26A
CN403
SIRCS Vcc 1
SIRCS DATA 2
SIRCS GND 3
CN401
CH 1 HP OUT(X) 1
CH 1 HP OUT(G) 2
CH 2 HP OUT(X) 3
CH 2 HP OUT(G) 4
CH 1 HP RET 5
CH 1 HP VOL(X) 6
CH 1 HP VOL(G) 7
CH 2 HP VOL(X) 8
CH 2 HP RET 9
CH 2 HP VOL(G) 10
J2 CONTROL S
J1 HEAD PHONES JACK
JW2
RV1 (1/2) 20K
W1
JW1
RV1 (2/2) 20K
HEADPHONES
HP-61
CN105
1 YA
2 GND
3 Y RF
4 GND
5 Y SW
6 C RF
7 GND
8 LTC EQ(X)
9 LTC EQ(G)
10 CTL SIG
11 TRAKING
12 PATH JIG
Factory Use
VP-44A/44AP
CN1
1 TXD
2 RXD
3 Vcc
4 GND
5 GND
CN2
1 TENSION IN
2 TENSION GND
CN3
UNREG +12V 1
UNREG +6V 2
UNREG GND 3
UNREG -8V 4
UNREG -12V 5
REG +5V 6
REG GND 7
REG -5V 8
Factory Use
For Check
SS-53A

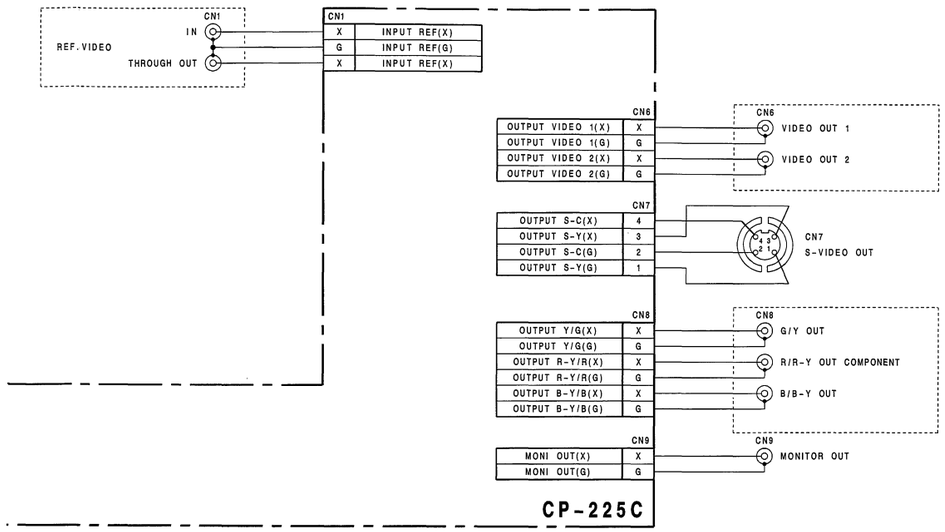

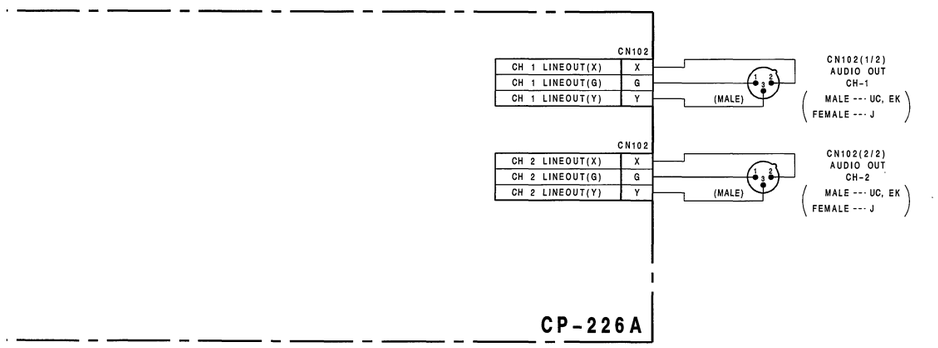

FRAME (2/2)

UVW-1200 (J) ;#10001-
UVW-1200 (UC) ;#10001-
UVW-1200P (EK) ;#10001-

Section 17
Semiconductor Pin Assignments

この章の図の中には互換性のないダイオード、トランジスタ、ICが併記されていることがあります。部品を交換するときには必ず部品表を参照してください。
等価回路はICメーカーのData Bookに従いました。

The chart in this section may sometimes show diodes, transistors, and ICs that are not interchangeable. When replacing a component, be sure to refer to the parts list. The circuit diagram of each IC is obtained from the IC data book published by the manufacturer.

DIODE PAGE

10E-2 17-3
11E2 17-3

1SS119 17-3
1SS119TD 17-3
1SS303 17-3
1SS304 17-3
1SV160 17-3
1T33C 17-3

DA204U 17-3
DA210S 17-3

KV1470 17-3

RB441Q 17-3
RD??ESB 17-3
RD??M 17-3
RD??MB 17-3
RD??M-B? 17-3

SB007-03CP 17-3
SB01-05CP 17-3

UZM??B 17-3

LED

GL480 17-3

MISCELLANEOUS

DM-230 17-3
GP1A30R 17-3

TRANSISTOR

2SA1020 17-3
2SA1115 17-3
2SA1141 17-3
2SA1150 17-3
2SA1175 17-3
2SA1232 17-3
2SA1319 17-3
2SA1610 17-3
2SA1611 17-3

2SB1094 17-4
2SB1416 17-4
2SB733 17-4
2SB733-34 17-4

TRANSISTOR PAGE

2SB810 17-4
2SB941 17-4

2SC2458 17-4
2SC2655 17-4
2SC2715 17-4
2SC2715Y 17-4
2SC2785 17-4
2SC3012 17-4
2SC3332 17-4
2SC3399 17-4
2SC3735 17-4
2SC4176 17-4
2SC4176-B35 17-4
2SC4177 17-4
2SC4177-L6 17-4
2SC4178 17-4
2SC4178-F13 17-4
2SC4213A 17-4

2SD1020 17-4
2SD1021 17-4
2SD2136 17-4
2SD596-DV5 17-4
2SD773 17-4
2SD788 17-4

2SJ106 17-4
2SJ226 17-5

2SK209 17-5
2SK852-X2 17-5
2SK94-X4 17-5

DTA123JU 17-5
DTA144EU 17-5

DTC144ES 17-4
DTC144EU 17-5

FMS1 17-5
FMS2 17-5
FMW1 17-5
FMW2 17-5
FMW7 17-5
FMW8 17-5
FMY3 17-5

IMX1 17-5
IMZ1 17-5

PT480 17-5

IC PAGE

74F00SJ 17-6

AM27C020-150DC 17-6
AN77L05 17-6

BX3914 17-6

CX20188 17-7
CX22017 17-6

CXA1370Q 17-8
CXA1450M 17-7
CXA1451M 17-7
CXA1479Q 17-8
CXA1521M 17-7

CXD1095Q 17-9
CXD1151Q 17-10
CXD1171M 17-9
CXD1175AM 17-11
CXD1216M 17-11
CXD1217M 17-38
CXD2202Q 17-12
CXD2207Q 17-13
CXD8161AQ 17-16
CXD8165Q 17-15
CXD8176AQ 17-14
CXD8243AM 17-14
CXD8310M 17-10
CXD8313Q 17-18
CXD8384Q 17-40

CXK48324Q 17-16

HD6435348RA00F 17-20

L78M09T-FA 17-19

L79M05T-FA 17-19
L79M09T-FA 17-19

LA7205 17-19

LB1620 17-20

LM1881M 17-19
LM2903P 17-19
LM2903PS 17-19
LM311PS 17-19
LM358P 17-19

IC PAGE

M51957BFP 17-22
M51957BL 17-22
M51958A 17-22
M54523P 17-22
M54532P 17-22

MB4002PF 17-22
MB40568 17-23
MB88201 17-22
MB88342PF 17-23

MC14051BF 17-23
MC14052BF 17-23
MC14053BCP 17-23
MC14053BF 17-23
MC14066BF 17-24
MC14069UBF 17-24
MC14576BF 17-24
MC1488M 17-39
MC1489M 17-39
MC34051M 17-24
MC68HC05C8 17-24
MC74HC173F 17-25
MC74HC4002F 17-25
MC74HC4024N 17-25
MC74HC4538AN 17-26

MS6264CLL-10FC 17-25

NJM2068DD 17-26
NJM2903D 17-19
NJM360M 17-26
NJM4556M 17-26
NJM4556M-A 17-26
NJM4558D-D 17-26
NJM4558D-FA 17-26
NJM4558M 17-26
NJM78L09A 17-26
NJM78M09FA 17-26
NJM79L05A 17-26
NJM79L09A 17-26
NJM79M09FA 17-27

PQ05SZ51 17-19
PQ30RV1 17-27
PQ30VB11 17-27

SC14S66F 17-27
SC14S66FEL 17-27
SC7S04F 17-27

IC	PAGE
SC7S32F	17-27
SN74HC00AN	17-27
SN74HC00ANS	17-27
SN74HC04ANS	17-27
SN74HC08AN	17-27
SN74HC08ANS	17-27
SN74HC10ANS	17-28
SN74HC11ANS	17-28
SN74HC138ANS	17-28
SN74HC157ANS	17-28
SN74HC161AN	17-28
SN74HC164ANS	17-28
SN74HC192NS	17-29
SN74HC266ANS	17-29
SN74HC27ANS	17-29
SN74HC273ANS	17-40
SN74HC32ANS	17-29
SN74HC541ANS	17-29
SN74HC7266NS	17-29
SN74HC74AN	17-29
SN74HC74ANS	17-29
SN74HC86ANS	17-30
SN74HCU04AN	17-27
SN74HCU04ANS	17-27
SN74LS221NS	17-30
SRM2016M10	17-30
TA7267P	17-30
TA78L09S	17-26
TC4W53F	17-40
TC5081AP	17-31
TC74HC123AF	17-31
TC74HC191AF	17-31
TC74HC221AF	17-30
TC7S04F	17-27
TC7S08F	17-31
TC7S32F	17-27
TL062CPS	17-31
TL082CPS	17-31
TL084CNS	17-31
TL431CLP	17-32
UPC324G2	17-32
UPC358C	17-19
UPC358G2	17-19
UPC4557C	17-32
UPC4558G2	
UPC4570C	17-32
UPC4570G2	17-32
UPC4574G2	17-32
UPC78L05T	17-32
UPD4053BC	17-23
UPD42101C-3	17-32
UPD42101G-3	17-32
UPD42505C-50	17-42
UPD6453GT	17-33
UPD70320GJ-8 -5BG	17-36
UPD75028GC	17-34
UPD75048CW	17-35

DIODE

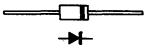

10E-2
11E2
1SS119
1SS119TD
RB441Q

TOP VIEW

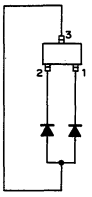

1SS303

TOP VIEW

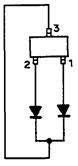

1SS304

TOP VIEW

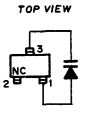

1SV160

1T33C

TOP VIEW

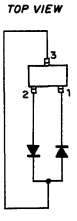

DA204U

DA210S

—TOP VIEW—

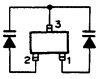

KV1470

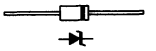

RD ? ?ESB

TOP VIEW

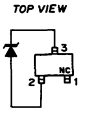

RD ? ?M
RD ? ?MB
RD ? ?M-B ?
UZM ? ?B

TOP VIEW

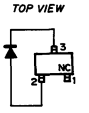

SB007-03CP

SB01-05CP

LED

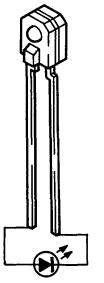

GL480 ; INFRARED

MISCELLANEOUS

TOP VIEW

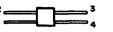

— Equivalent Circuit —

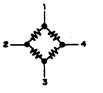

DM-230

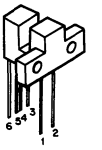

GP1A30R

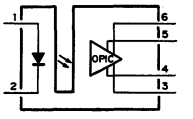

TRANSISTOR

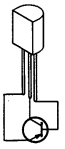

2SA1020

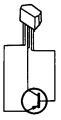

2SA1115
2SA1150

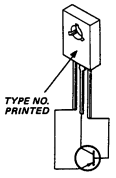

2SA1141

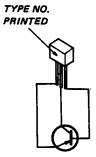

2SA1175
2SB810

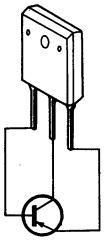

2SA1232

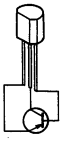

2SA1319

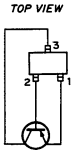

2SA1610
2SA1611

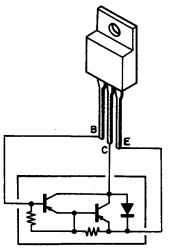

2SB1094

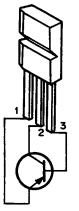

2SB1416

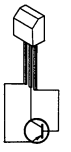

2SB733
2SB733-34

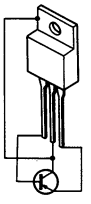

2SB941

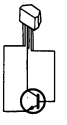

2SC2458

2SC2655
2SD788

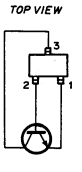

2SC2715
2SC2715Y
2SC3735
2SC4176
2SC4176-B35
2SC4177
2SC4177-L6
2SC4178
2SC4178-F13
2SC4213A
2SD596-DV5

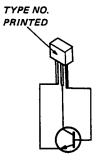

2SC2785
2SD1020
2SD1021

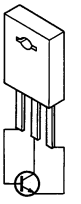

2SC3012

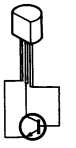

2SC3332

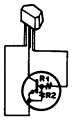

2SC3399 (R1 = 47K, R2 = 47K)
DTC144ES (R1 = 47K, R2 = 47K)

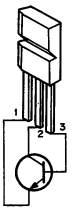

2SD2136

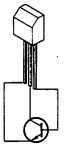

2SD773

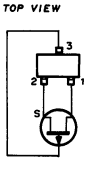

2SJ106

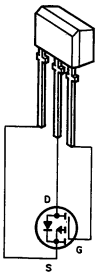

2SJ226

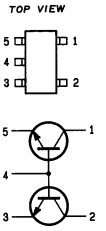

FMW1
FMW8

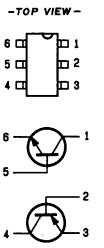

IMZ1

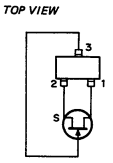

2SK209
2SK852-X2
2SK94-X4

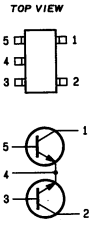

FMW2

PT480

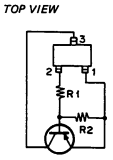

DTA123JU (R1 = 2.2K, R2 = 47K)
DTA144EU (R1 = 47K, R2 = 47K)

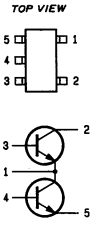

FMW7

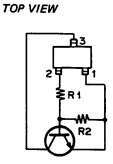

DTC144EU (R1 = 47K, R2 = 47K)

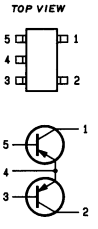

FMS1

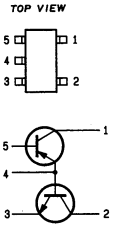

FMY3

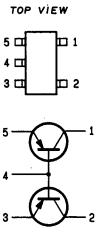

FMS2

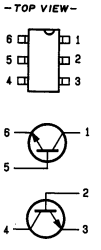

IMX1

IC

74F00SJ (NS) FLAT PACKAGE

TTL 2-INPUT POSITIVE-NAND GATE

– TOP VIEW –

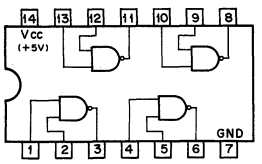

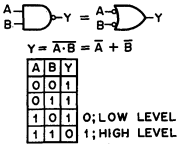

A	B	Y
0	0	1
0	1	1
1	0	1
1	1	0

0; LOW LEVEL
1; HIGH LEVEL

AM27C020-150DC (AMD)

C-MOS 2M (262,144x8)-BIT UV ERASABLE PROM

– TOP VIEW –

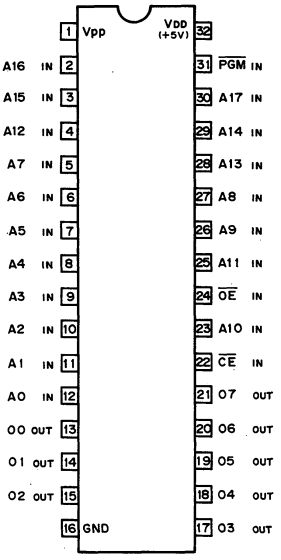

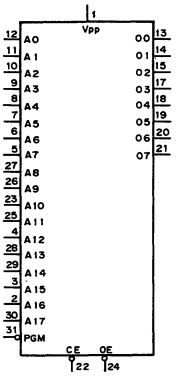

A0 – A17 ; ADDRESS INPUT
O0 – O7 ; DATA OUTPUT
CE ; CHIP ENABLE
OE ; OUTPUT ENABLE
PGM ; PROGRAM INPUT

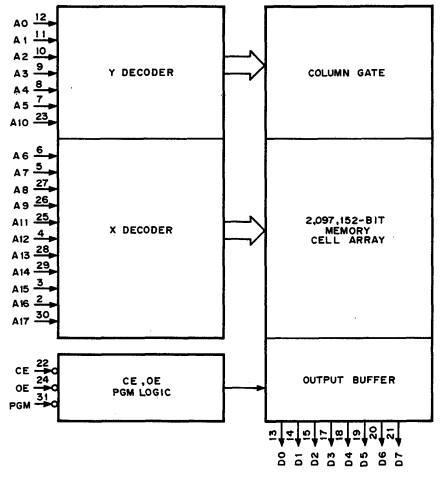

AN77L05 (PANASONIC) + 5V

POSITIVE VOLTAGE REGULATOR

– FRONT VIEW –

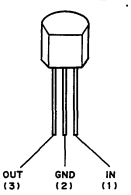

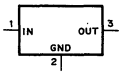

BX3914 (SONY)

CTL REC/PB AMPLIFIER

– PRINTED SIDE –

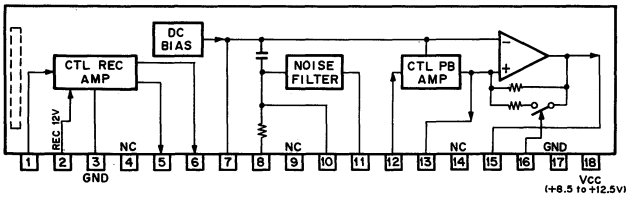

CX22017 (SONY)

VIDEO SIGNAL PROCESSOR

– TOP VIEW –

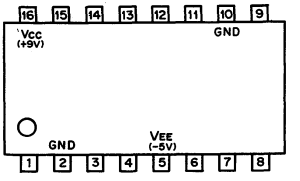

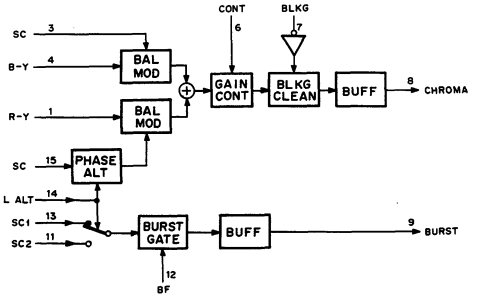

CXA1451M (SONY)

WIDEBAND VIDEO SWITCH
– TOP VIEW –

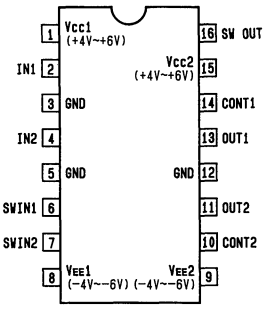

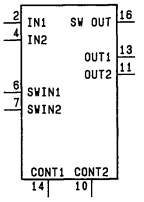

INPUT
CONT1, 2 ; POWER SAVE CONTROL PIN OF DRV.1 AND DRV.2
INT1, 2 ; 1/2-CHANNEL INPUT PIN
SWIN1, 2 ; IN1/IN2 PINS SWITCH CONTROL PIN

OUTPUT
OUT1, 2 ; OUTPUT PIN OF DRV.1/2
SWOUT ; OUTPUTS IN1 PIN OR IN2 PIN WHICH HAS BEEN SELECTED BY SWITCH.

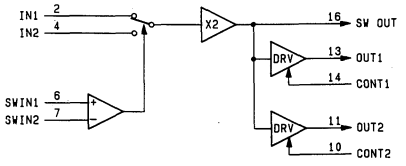

CXA1450M (SONY) FLAT PACKAGE

VIDEO SIGNAL SWITCH
– TOP VIEW –

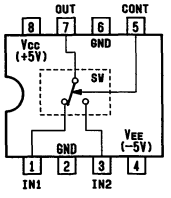

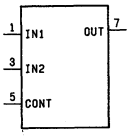

CXA1521M (SONY)

GAIN CONTROL AMP
– TOP VIEW –

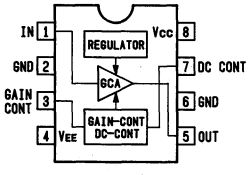

CX20188 (SONY)

DOLBY B TYPE AND C TYPE, NOISE REDUCTION SYSTEM
– TOP VIEW –

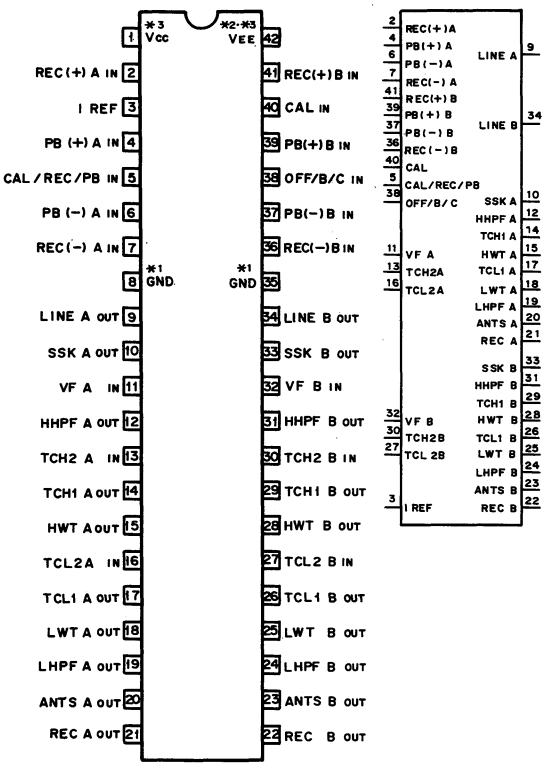

*1 ; ONE POWER→Vcc/2. TWO POWER→GND
*2 ; ONE POWER→GND. TWO POWER→Vee
*3 ; Vcc − Vee : +8 to +21V

ANTS ; ANTI SATURATION
CAL ; CALIBRATION
CAL/REC/PB ; CALIBRATION/REC/ PB SELECT
HHPF ; *HLS HIGH PASS FILTER
HWT ; *HLS WAITING
I REF ; REFERENCE SOURCE CURRENT
LHPF ; *LLS HIGH PASS FILTER
LWT ; *LLS WAITING
OFF/B/C ; DOLBY NR OFF/B-TYPE/C-TYPE SELECT
SSK ; SPECTRAL SKEWING SWITCH
TCH ; *HLS DETECTOR TIME CONSTANT
TCL ; *LLS DETECTOR TIME CONSTANT
VF ; ENCODE INPUT
*HLS ; HIGH LEVEL STAGE
*LLS ; LOW LEVEL STAGE

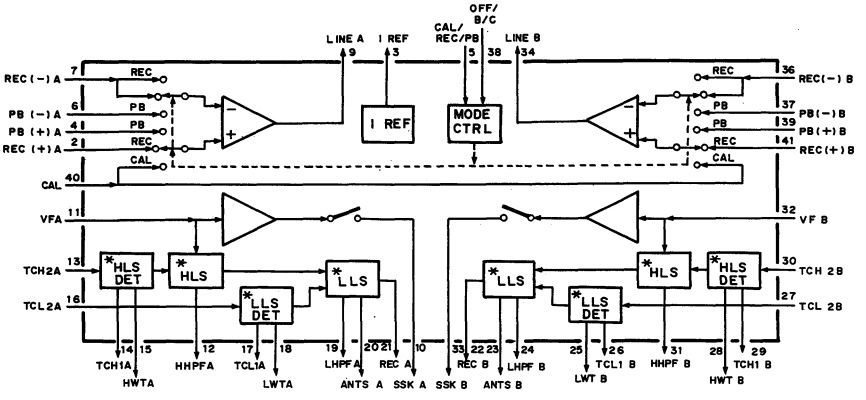

CXA1370Q (SONY)

DEMODULATOR/OVER MODULATION COMPENSATOR
– TOP VIEW –

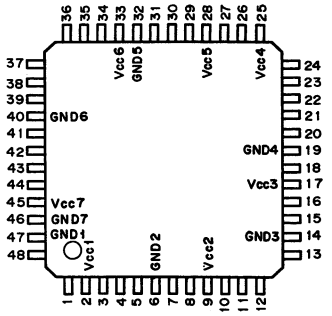

(Vcc = + 5V)

PIN No.	I/O	SIGNAL	PIN No.	I/O	SIGANL	PIN No.	I/O	SIGNAL	PIN No.	I/O	SIGNAL
1	O	OMC	13	I	DRPV	25	–	Vcc4	37	I	SHREF
2	–	Vcc1	14	–	GND3	26	O	DEMCV	38	I	SHAPL
3	O	MVDC	15	O	BBO	27	I	VDGAIN	39	I	SHCLP
4	I	LMT2	16	O	BAO	28	–	Vcc5	40	–	GND6
5	I	LMT1	17	–	Vcc3	29	I	IEXT2	41	I	LM2IN1
6	–	GND2	18	O	SWO	30	I	VIIN	42	I	LM2IN2
7	I	HFX	19	–	GND4	31	I	IEXT1	43	I	LM1IN1
8	I	LDO	20	I	SW3	32	–	GND5	44	I	LM1IN2
9	–	Vcc2	21	I	SWC1	33	–	Vcc6	45	–	Vcc7
10	O	DMRC	22	I	SW2	34	O	SHO	46	–	GND7
11	O	FDEDC	23	I	SWC2	35	O	SHC	47	–	GND1
12	I	DMGAIN	24	I	SW1	36	I	SHVIN	48	I	REFV

Vcc1, GND1; FOR OVER MODULATION COMPENSATOR
Vcc2, GND2; FOR DEMODULATOR
Vcc3, GND3; FOR BUFFER
Vcc4, GND4; FOR 3 INPUT SWITCH
Vcc5, GND5; FOR DEMODULATOR
Vcc6, GND6; FOR SAMPLE HOLD
Vcc7, GND7; FOR LIMITER

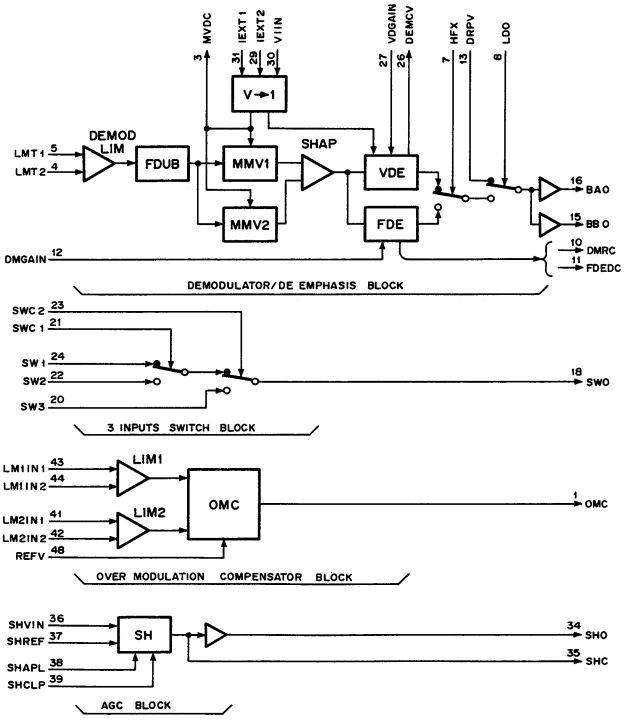

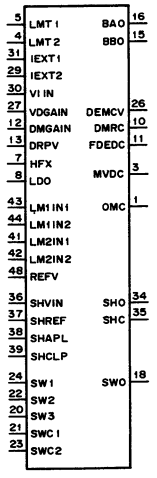

INPUT
DMGAIN ; FOR RESISTOR
DRPV ; VIDEO SIGNAL
HFX ; SWITCH CONTROL
IEXT1, 2 ; FOR RESISTOR
LM1, 2 ; OVER MODULATION COMPENSATE LIMITER
LMT1, 2 ; DEMODULATE LIMITER
LDO ; SWITCH CONTROL
REFV ; REFERENCE VOLTAGE
SHAPL ; FOR RESISTOR
SHCLP ; SAMPLE HOLD PULSE
SHREF ; SAMPLE HOLD REFERENCE VOLTAGE
SHVIN ; SAMPLE HOLD DEMODULATE VIDEO
SW1 – 3 ; 3 INPUT SWITCH
SWC1, 2 ; 3 INPUT SWITCH CONTROL
VDGAIN ; GAIN CONTROL VOLTAGE
VIIN ; V→I CONTROL VOLTAGE

OUTPUT
BAO, BBO ; DEMODULATOR
DEMCV ; VARIABLE DEEMPHASIS CONSTANT
DMRC ; FIXED DEEMPHASIS CONSTANT
FDEDC ; FIXED DEEMPHASIS DECOUPLING
MVDC ; MONOMULTI DECOUPLING
OMC ; OVER MODULATION COMPENSATER
SHC ; SAMPLE HOLD CAPACITY
SHO ; SAMPLE HOLD
SWO ; 3 INPUT SWITCH

CXA1479Q (SONY)

PB RF SIGNAL PROCESSOR FOR VTR
– TOP VIEW –

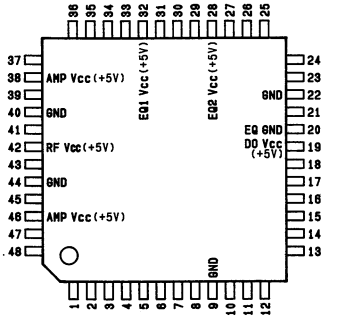

PIN NO.	I/O	SIGNAL	PIN NO.	I/O	SIGNAL	PIN NO.	I/O	SIGNAL	PIN NO.	I/O	SIGNAL
1	I	CHSW CONT	13	I	OFF SET1	25	I	EQ2(A)IN	37	O	AB RF OUT
2	I	OFF SET2	14	I	IN A	26	I	EQ2(MAIN)CNT	38	–	AMP Vcc
3	O	AOR OUT	15	I	EQSEL	27	I	EQ2(B)IN	39	I	RF(A)IN
4	I	ENV(B)	16	I	IN B	28	–	EQ2 Vcc	40	–	GND
5	I	ENV(A)	17	–	DCPL1	29	O	EQ1 OUT	41	I	RF(B)IN
6	O	TH OUT	18	O	DO EQ	30	I	EQ1 CONT	42	–	RF Vcc
7	I	TH CONT	19	–	DO Vcc	31	I	EQ1(B)IN	43	I	RF(C)IN
8	O	DO OUT	20	–	EQ GND	32	–	EQ1 Vcc	44	–	GND
9	O	REF	21	O	EQ2(MAIN)OUT	33	I	EQ1(A)IN	45	I	RF(D)IN
10	I	ENV IN	22	–	GND	34	I	GAIN CNT	46	–	AMP Vcc
11	O	DET OUT2	23	O	EQ2(SUB)OUT	35	O	SWD RF	47	O	CD RF OUT
12	O	DET OUT1	24	I	EQ2(SUB)CNT	36	I	RF LEVEL	48	I	MODE CONT

CXD1095Q (SONY) FLAT PACKAGE

C-MOS I/O PORT EXPANDER

– TOP VIEW –

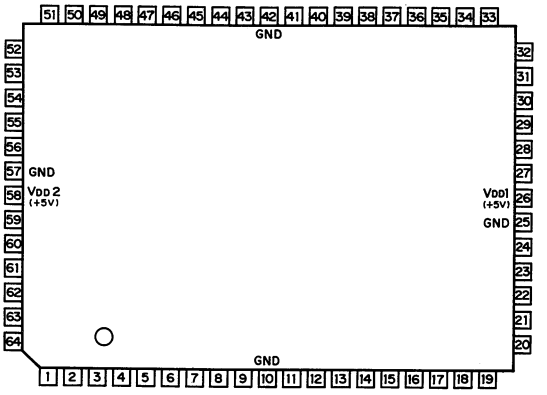

PIN NO.	IN	OUT	SYMBOL	PIN NO.	IN	OUT	SYMBOL	PIN NO.	IN	OUT	SYMBOL	PIN NO.	IN	OUT	SYMBOL
1			NC	17	O	O	PC6	33			NC	49	O	O	PX0
2			NC	18	O	O	PC7	34			NC	50	O	O	PX1
3	O	O	PB1	19			NC	35	O	O	D3	51			NC
4	O	O	PB2	20	O	O	PD0	36	O	O	D4	52	O	O	PX2
5	O	O	PB3	21	O	O	PD1	37	O	O	D5	53	O	O	PX3
6	O	O	PB4	22	O	O	PD2	38	O	O	D6	54	O	O	PA0
7	O	O	PB5	23	O	O	PD3	39	O	O	D7	55	O	O	PA1
8	O	O	PB6	24	O	O	PD4	40	O		CLR	56	O	O	PA2
9	O	O	PB7	25			GND	41	O		RST	57			GND
10			GND	26	O		VDD (+5V)	42			GND	58	O		VDD (+5V)
11	O	O	PC0	27	O	O	PD5	43	O		WR	59	O	O	PA3
12	O	O	PC1	28	O	O	PD6	44	O		RD	60	O	O	PA4
13	O	O	PC2	29	O	O	PD7	45	O		CS	61	O	O	PA5
14	O	O	PC3	30	O	O	D0	46	O		A0	62	O	O	PA6
15	O	O	PC4	31	O	O	D1	47	O		A1	63	O	O	PA7
16	O	O	PC5	32	O	O	D2	48	O		A2	64	O	O	PB0

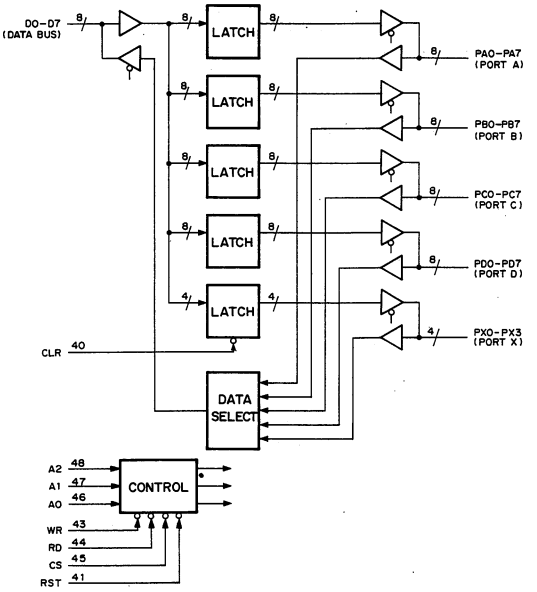

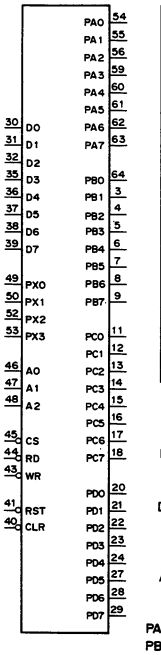

CS	RD	WR	A2	A1	A0	MODE
0	0	1	0	0	0	PORT A→DATA BUS
0	0	1	0	0	1	PORT B→DATA BUS
0	0	1	0	1	0	PORT C→DATA BUS
0	0	1	0	1	1	PORT D→DATA BUS
0	0	1	1	0	0	PORT X→DATA BUS
0	0	1	1	0	1	——
0	0	1	1	1	0	——
0	0	1	1	1	1	——
0	1	0	0	0	0	DATA BUS→PORT A
0	1	0	0	0	1	DATA BUS→PORT B
0	1	0	0	1	0	DATA BUS→PORT C
0	1	0	0	1	1	DATA BUS→PORT D
0	1	0	1	0	0	DATA BUS→PORT X
0	1	0	1	0	1	——
0	1	0	1	1	0	DATA BUS→CTL REG.1
0	1	0	1	1	1	DATA BUS→CTL REG.2
1	X	X	X	X	X	DATA BUS ; HI-Z

0 ; LOW LEVEL
1 ; HIGH LEVEL
X ; DON'T CARE
HI-Z, HIGH IMPEDANCE

DO–D7 ; DATA BUS INPUTS/OUTPUTS
CS ; CHIP SELECT INPUT
RD ; READ STROBE INPUT
WR ; WRITE STROBE INPUT
A0–A2 ; ADDRESS INPUT
RST ; RESET INPUT
CLR ; CLEAR INPUT
PA0–PA7 ; PORT A INPUTS/OUTPUTS
PB0–PB7 ; PORT B INPUTS/OUTPUTS
PC0–PC7 ; PORT C INPUTS/OUTPUTS
PD0–PD7 ; PORT D INPUTS/OUTPUTS
PX0–PX3 ; PORT X INPUTS/OUTPUTS

CXD1171M (SONY) FLAT PACKAGE

C-MOS 8-BIT D/A CONVERTER

– TOP VIEW –

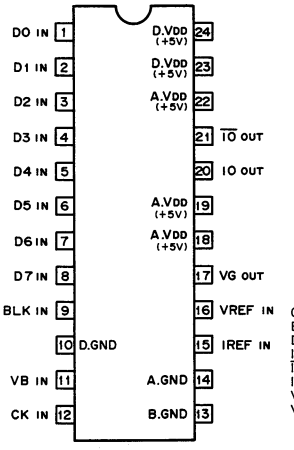

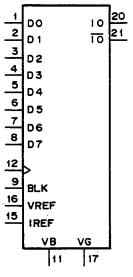

CK ; CLOCK INPUT
BLK ; BLANKING PULSE INPUT
D0 – 7 ; DIGITAL DATA INPUT
IO ; CURRENT OUTPUT
IO ; INVERT CURRENT OUTPUT
IREF ; CURRENT REFERENCE INPUT
VB, VG ; FOR CAPACITOR
VREF ; VOLTAGE REFERENCE INPUT

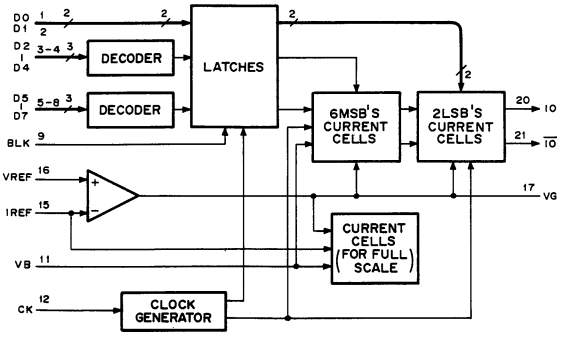

CXD1151Q (SONY)

C-MOS VIDEO SIGNAL PROCESSOR FOR BETACAM
– TOP VIEW –

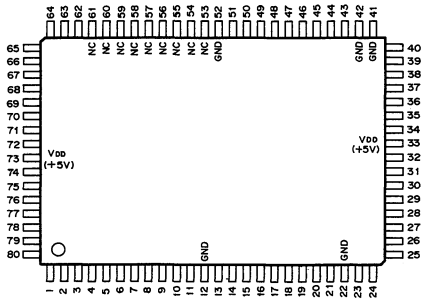

PIN ASSIGNMENT

Pin NO.	I/O	SIGNAL	Pin NO.	I/O	SIGNAL	Pin NO.	I/O	SIGNAL	Pin NO.	I/O	SIGNAL
1	I	RDO	21	I	BD8	41		NC	61		NC
2	I	RD1	22	–	Vss (GND)	42	–	Vss (GND)	62	I	COFF
3	I	RD2	23	O	TM0	43	O	CTD0	63	I	FP1
4	I	RD3	24	O	TM1	44	O	CTD1	64	I	FP2
5	I	RD4	25	O	TM2	45	O	CTD2	65	I	CFFD
6	I	RD5	26	O	TM3	46	O	CTD3	66	I	CFID
7	I	RD6	27	O	TM4	47	O	CTD4	67	I	VO
8	I	RD7	28	O	TM5	48	O	CTD5	68	I	BLK2
9	I	RD8	29	O	TM6	49	O	CTD6	69	I	SH
10	I	TSL2	30	O	TM7	50	O	CTD7	70	I	CLPI
11	I	TSL3	31	O	TM8	51	O	CTD8	71	O	CLPO
12	–	Vss (GND)	32	O	TM9	52	–	Vss (GND)	72	I	XRST
13	I	BDO	33	I	VDD (+5V)	53		NC	73	I	VDD (+5V)
14	I	BD1	34	I	TMOD	54		NC	74	I	TST1
15	I	BD2	35	I	TMEN	55		NC	75	I	TST2
16	I	BD3	36	I	TSL1	56		NC	76	I	ZSHT
17	I	BD4	37	I	BLK1	57		NC	77	I	RCK
18	I	BD5	38	I	MODE1	58		NC	78	I	WCK
19	I	BD6	39	I	MODE2	59		NC	79	I	RZERO
20	I	BD7	40	I	MODE3	60		NC	80	I	WZERO

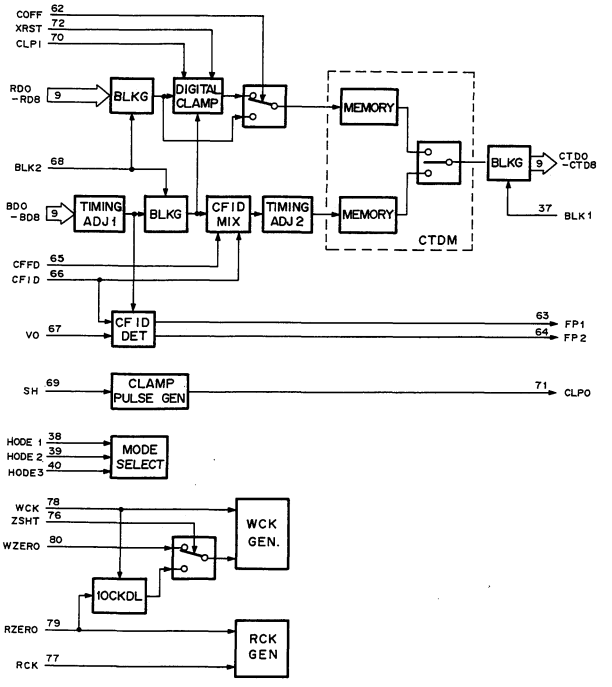

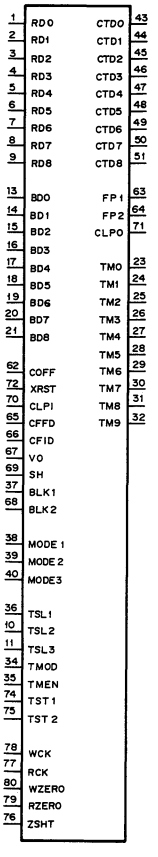

RDO-RD8	; R-Y DATA INPUTS
BDO-BD8	; B-Y DATA INPUTS
COFF	; DIGTAL CLAMP CIRCUIT CONTROL INPUT
XRST	; DIGTAL CLAMP CIRCUIT RESET PULSE INPUT
CLPI	; CLAMP PULSE INPUT FOR DIGITAL CLAMP
CFFD	; FIELD SIGNAL INPUT FOR COLOR FRAMING ID MIX
CFID	; PULSE INPUT FOR COLOR FRAMING ID MIX
VO	; COLOR FRAMING DETECT CIRCUIT RESET PULSE INPUT
SH	; TRIGGER INPUT FOR CLPO OUTPUT
BLK1, BLK2	; BLKG PULSE INPUTS
TSL1	; MEMORY SELECT INPUT IN TEST MODE
TSL2, TSL3	; TEST INPUTS
TMOD	; TEST MODE CONTROL INPUT
TMEN	; MEMORY ADD CONTROL INPUT IN TEST MODE
TST1, TST2	; DIGITAL CLAMP CIRCUIT TEST CONTROL INPUTS
WCK	; WRITE CLOCK INPUT ↓
RCK	; READ CLOCK INPUT ↓
WZERO	; WRITE ZERO INPUT ↓
RZERO	; READ ZERO INPUT ↓
ZSHT	; INTERNAL/EXTERNAL WZERO SELECT INPUT
CTD0-CTD8	; CTDM DATA OUTPUTS
FP1, FP2	; COLOR FRAMING DETECT PULSE OUTPUTS
CLPO	; CLAMP PULSE OUTPUT
TM0-TM9	; DIGITAL CLAMP CIRCUIT TEST SIGNAL OUTPUTS
MODE1-MODE3; MODE SELECT INPUTS	

MODE1	1				1			
MODE2	1		0		1		0	
MODE3	1	0	1	0	1	0	1	0
nfH	910fH	858fH	909fH	X	908fH	864fH	1135fH	TCLR

0 : LOW LEVEL 1 : HIGH LEVEL

CXD8310M (SONY)

C-MOS GATE ARRAY
– TOP VIEW –

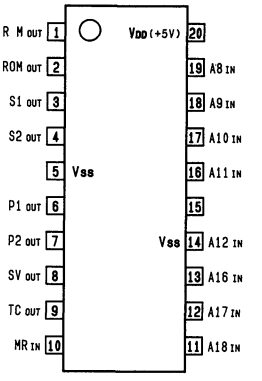

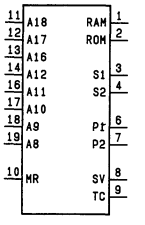

INPUT

A8 – A12	; ADDRESS BUS
A16 – A18	; ADDRESS BUS
MR	; MEMORY REQUEST

OUTPUT

P1, P2	; PARALLEL I/O
RAM	; RAM TERMINAL
ROM	; ROM TERMINAL
S1, S2	; SERIAL I/O
SV	; RAM-SV TERMINAL
TC	; RAM-TC TERMINAL

CXD1175AM (SONY) FLAT PACKAGE

C-MOS 8-BIT 20MSPS VIDEO A/D CONVERTER
– TOP VIEW –

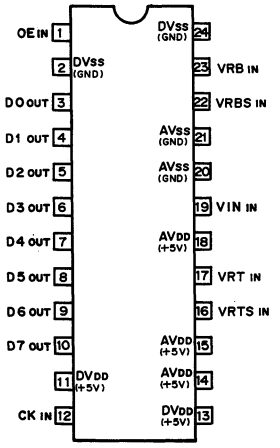

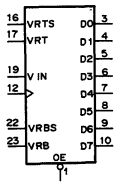

AV_{DD} : ANALOG POWER SUPPLY
AV_{SS} : ANALOG GROUND
CK : CLOCK INPUT
D0 – 7 : DIGITAL DATA OUTPUTS (LSB to MSB)
DV_{DD} : DIGITAL POWER SUPPLY
DV_{SS} : DIGITAL GROUND
OE : OUTPUT ENABLE
(OE = HIGH ; HIGH IMPEDANCE)
VIN : ANALOG VOLTAGE INPUT
VRB : BOTTOM REFERENCE VOLTAGE INPUT
VRBS : AS SHORT-CIRCUIT AT VRB.
GENERATES + 0.6V
VRT : TOP REFERENCE VOLTAGE INPUT
VRTS : AS SHORT-CIRCUIT AT VRT.
GENERATES + 2.6V

STEP	INPUT SIGNAL VOLTAGE	DATA OUTPUTS							
		D7	D6	D5	D4	D3	D2	D1	D0
0	0V (VRT)	1	1	1	1	1	1	1	1
1	0.01V	1	1	1	1	1	1	1	0
⋮	⋮	⋮	⋮	⋮	⋮	⋮	⋮	⋮	⋮
127	1.34V	1	0	0	0	0	0	0	0
128	1.35V	0	1	1	1	1	1	1	1
⋮	⋮	⋮	⋮	⋮	⋮	⋮	⋮	⋮	⋮
255	2.7V (VRB)	0	0	0	0	0	0	0	0

0 : LOW LEVEL
1 : HIGH LEVEL

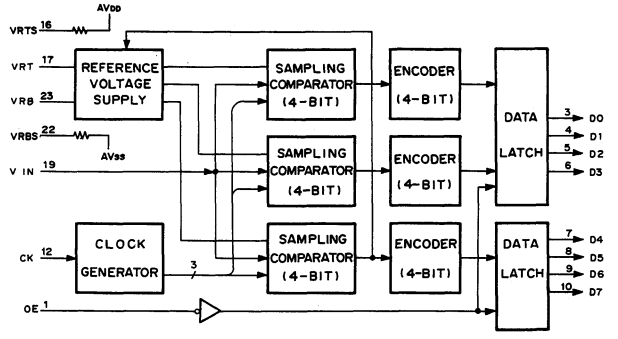

CXD1216M (SONY) FLAT PACKAGE

C-MOS GENLOCK DRIVER
– TOP VIEW –

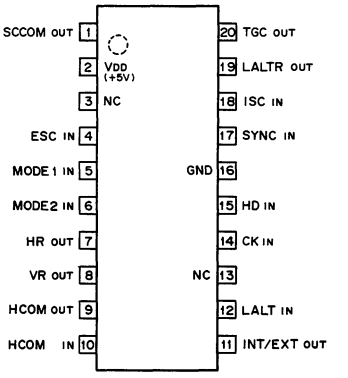

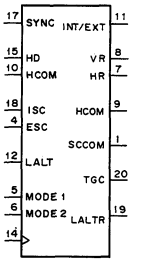

INPUT		MODE	SYSTEM
MODE1	MODE2		
0	0	M1	PAL-VBS
1	0	M2	PALM-VBS
0	1	M3	PAL,SECAM-VS/SC/LALT
1	1	M4	NTSC-VBS,NTSC-VS/SC PALM-VS/SC/LALT

0 ; LOW LEVEL
1 ; HIGH LEVEL

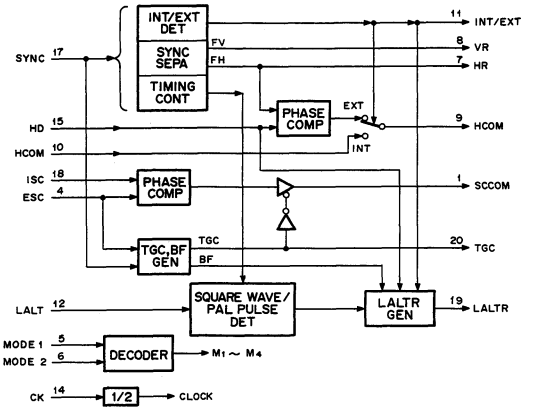

INPUT
CK : 4fsc CLOCK INPUT
ESC : SC/COLOR BURST
HCOM : PHASE COMPARATE FROM CXD1217
HD : H DRIVE FROM CXD1217
ISC : SUBCARRIER FROM CXD1217
LALT : LALT FROM REFERENCE SIGNAL GENERATOR
MODE1,2 : SYSTEM SELECT
SYNC : SYNC FROM REFERENCE SIGNAL GENERATOR

OUTPUT
HCOM : PHASE COMPARATOR HR WITH HD
HR : fH OF SYNC SEPARATE
INT/EXT : INTERNAL/EXTERNAL SPECIFIED
LALTR : LINE CHANGE RESET
SCCOM : PHASE COMPARATOR ESC WITH ISC
TGC : TRISTATE CONTROL
VR : fV OF SYNC SEPARATE

CXD2202Q (SONY)

SERVO IC

– TOP VIEW –

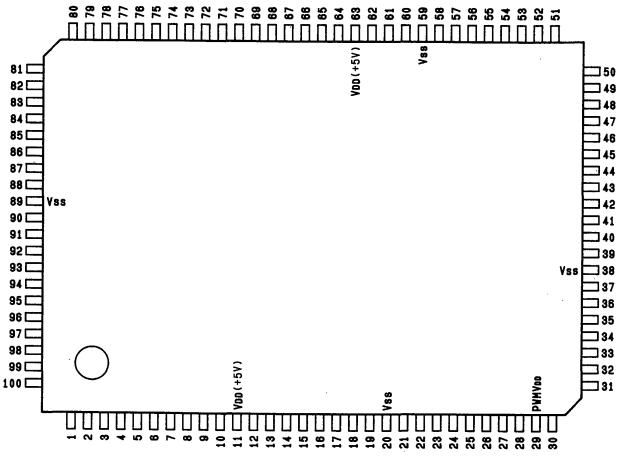

(VDD = +5V)

PIN No.	I/O	SIGNAL	PIN No.	I/O	SIGNAL	PIN No.	I/O	SIGNAL	PIN No.	I/O	SIGNAL
1	I	FG1/IP24	26	I/O	IOP2	51	I/O	D7	76	O	PPG11/OP21
2	I	FG0/IP23	27	I/O	IOP1	52	I/O	D6	77	O	PPG10/OP20
3	I	PBH/IP22	28	I/O	IOP0	53	I/O	D5	78	O	PPG0F/OP17
4	I	SYNC1/IP21	29	–	PWM VDD	54	I/O	D4	79	O	PPG0E/OP16
5	I	SYNC0/IP20	30	O	PWM7/OP37	55	I/O	D3	80	O	PPG0D/OP15
6	I	FG02/IP14	31	O	PWM6/OP36	56	I/O	D2	81	O	PPG0C/OP14
7	I	FG01/IP13	32	O	PWM5/OP35	57	I/O	D1	82	O	PPG0B/OP13
8	I	FG00/IP12	33	O	PWM4/OP34	58	I/O	D0	83	O	PPG0A/OP12
9	I	CTL/IP11	34	O	PWM3/OP33	59	–	Vss	84	O	PPG09/OP11
10	I	LAT/IP10	35	O	PWM2/OP32	60	I	RES	85	O	PPG08/OP10
11	–	VDD	36	O	PWM1/OP31	61	I	MD1	86	O	CLKO
12	I	UD/IP07	37	O	PWM0/OP30	62	I	MD0	87	I	EXTAL
13	I	CCLK/IP06	38	–	Vss	63	–	VDD	88	O	XTAL
14	I	FGC1/IP05	39	I	AS14	64	I	WR	89	–	Vss
15	I	FGC0/IP04	40	I	AS13	65	I	RD	90	O	PPG07/OP07
16	I	FGB1/IP03	41	I	A15	66	I	CE	91	O	PPG06/OP06
17	I	FGB0/IP02	42	I	A14	67	O	IREQ2	92	O	PPG05/OP05
18	I	FGA1/IP01	43	I	A13	68	O	IREQ1	93	O	PPG04/OP04
19	I	FGA0/IP00	44	I	A6	69	O	IREQ0	94	O	PPG03/OP03
20	–	Vss	45	I	A5	70	I	FXSEL	95	O	PPG02/OP02
21	I/O	IOP7	46	I	A4	71	O	OP26	96	O	PPG01/OP01
22	I/O	IOP6	47	I	A3	72	O	EXCS1/OP25	97	O	PPG00/OP00
23	I/O	IOP5	48	I	A2	73	O	EXCS0/OP24	98	I	FG12/IP27
24	I/O	IOP4	49	I	A1	74	O	PPG13/OP23	99	I	FG11/IP26
25	I/O	IOP3	50	I	A0	75	O	PPG12/OP22	100	I	FG10/IP25

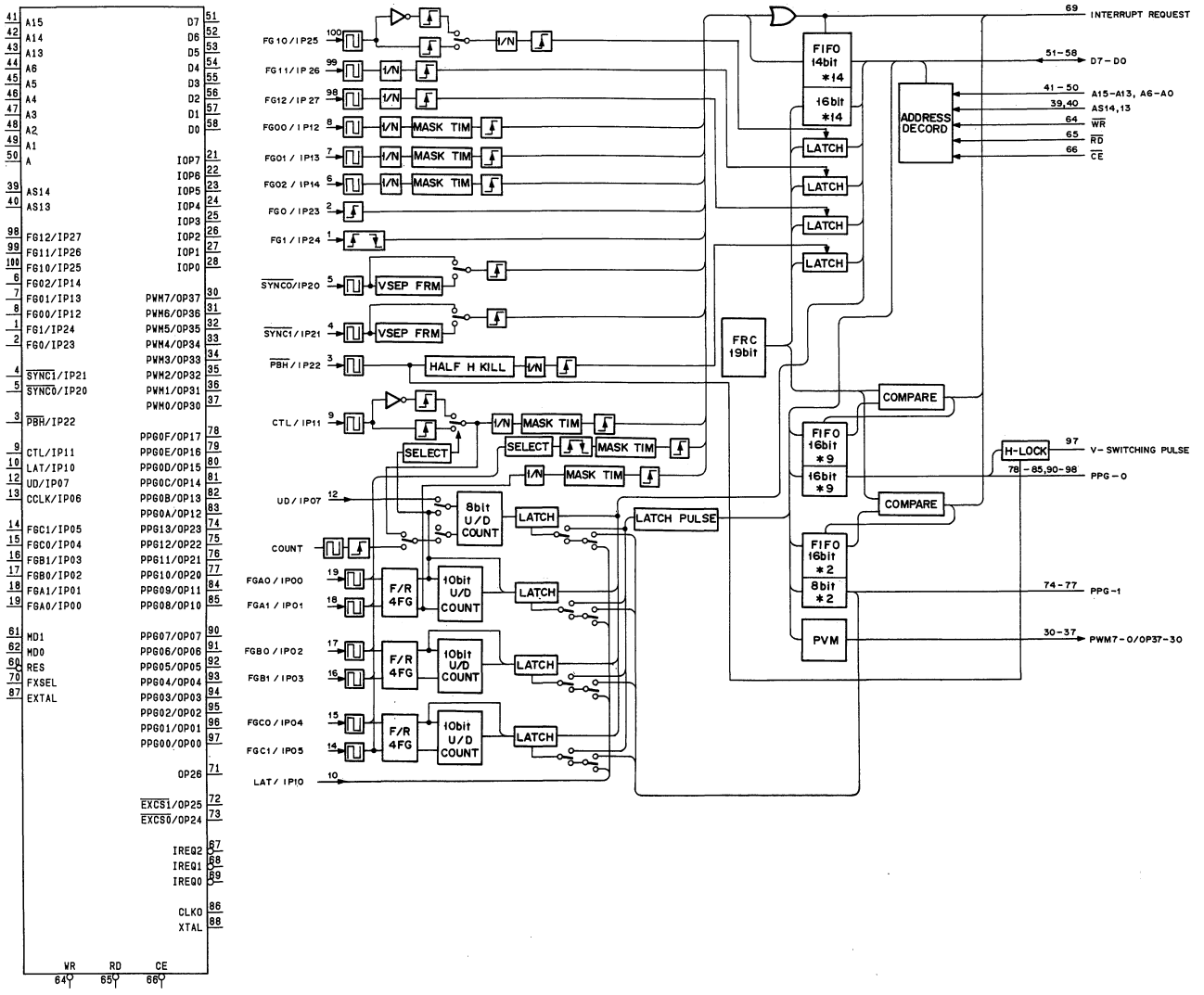

CXD2207Q (SONY)

C-MOS TBC WRITE CLOCK GENERATOR FOR BETACAM
– TOP VIEW –

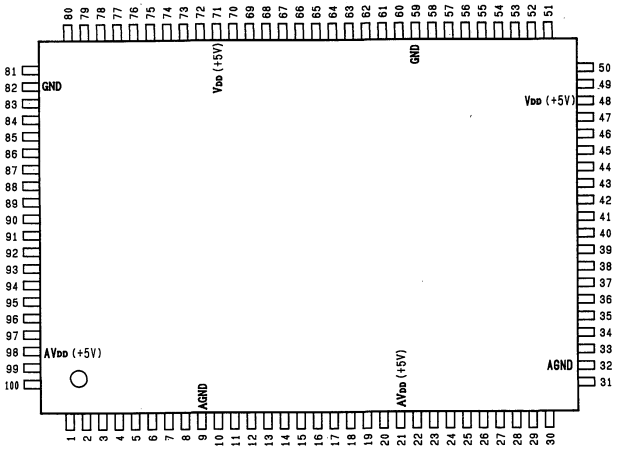

INPUT

A0 – A15	; ADDRESS BUS
AS13, AS14	; SELECTING CONDITION OF ADDRESS DECODER AS13 AND AS14 BITS
CCLK	; 8-BIT COUNTER CLOCK INPUT
CE	; CHIP ENABLE
CTL	; RESOLUTION 2.5MHz WITH EDGE SELECT FUNCTION. WITH FREQUENCY DIVISION MASK TIMER
EXTAL	; CRYSTAL OSCILLATION OR EXTERNAL CLOCK INPUT
FG0	; RESOLUTION 2.5MHz
FG00 – FG02	; FREQUENCY DIVISION ENABLE RESOLUTION 2.5MHz. WITH FREQUENCY DIVISION MASK TIMER
FG1	; RESOLUTION 2.5MHz BOTH EDGES
FG10	; EDGE SELECTION ENABLE RESOLUTION 10MHz
FG11, 12	; FREQUENCY DIVISION ENABLE RESOLUTION 10MHz
FGA0	; PERFORMS FORWARD/REVERSE ROTATION DETECTION AND 4FG COUNT (UP/DOWN) BY FGA0 AND FGA1. 10 BITS. UP/DOWN IS MADE BY CONTROLLING THE UP/DOWN OF 8-BIT COUNTER.
FGA1	; 4FG PERFORMS FREQUENCY DIVISION AND FRC CAPTURE THROUGH MASK TIMER. *1 : SELECTS ONE OF FGA0 TO FGC1 INPUT AND DETECTS BOTH EDGES AND PERFORM THE FRC CAPTURE THROUGH THE MASK TIMER.
FGB0	; PERFORMS FORWARD/REVERSE ROTATION DETECTION AND 4FG COUNT BY FGB0 AND FGB1.
FGB1	; *1 : SELECTS ONE OF FGA0 TO FGC1 INPUT AND DETECTS BOTH EDGES AND PERFORM THE FRC CAPTURE THROUGH THE MASK TIMER.
FGC0	; PERFORMS FORWARD/REVERSE ROTATION DETECTION AND 4FG COUNT BY FGC0 AND FGC1.
FGC1	; *1 : SELECTS ONE OF FGA0 TO FGC1 INPUT AND DETECTS BOTH EDGES AND PERFORM THE FRC CAPTURE THROUGH THE MASK TIMER.
FXSEL	; FREQUENCY DIVISION SELECTION OF CLOCK INPUT
LAT	; EXTERNAL LATCH TIMING OF UP/DOWN COUNTER
MD0, 1	; TEST MODE DESIGNATION
PBH	; INPUT OF COMPOSITE SYNC OR H SYNC. RESOLUTION 10MHz. WITH HALF H KILLER.
RD	; REDE
RES	; RESET
SYNC0, 1	; INPUT OF COMPOSITE SYNC OR V SYNC. RESOLUTION 2.5MHz.
UD	; 8-BIT COUNTER UP/DOWN INPUT
WR	; WRITE

XOUTPUT

CLKO	; CLOCK OUTPUT
EXCS0, 1	; DECODE AT ADDRESS A3 LEVEL
IREQ0	; INTERRUPTION SIGNAL OF FRC CAPTURE UNIT
IREQ1	; COINCIDENCE INTERRUPTION OF PPG0
IREQ2	; COINCIDENCE INTERRUPTION OF PPG1
OP26	; EXCLUSIVELY OUTPUT PORT
PPG00 – PPG0F	
PPG10 – PPG13	; PROGRAMMABLE PULSE GENERATOR RESOLUTION 1.25MHz PPG00 : WITH HLOCK
PWM0 – PWM5	; PWM OUTPUT NORMALLY PWM, OR PWM0 AND PWM1, PWM2 AND PWM3, OR PWM4 AND PWM5 OUTPUT SIGNAL CORRESPONDED TO PUSH-PULL.
PWM6, 7	; PWM OUTPUT
XTAL	; CRYSTAL OSCILLATION

INPUT/OUTPUT

D0 – D7	; DATA BUS
IOP0 – IOP7	; SELECTS AND USES INPUT AND OUTPUT BY EVERY 1 BIT.

(VDD = AVDD = + 5V)

PIN No.	I/O	SIGNAL	PIN No.	I/O	SIGNAL	PIN No.	I/O	SIGNAL	PIN No.	I/O	SIGNAL
1	O	SYNC	26	I	FOPO	51	I	PBE	76	I	SVLK
2	I	BLK	27	I	SHOT	52	I	NOS	77	I	SVD
3	I	VIN4	28	I	BCPI	53	I	SPD	78	I	OFF
4	I	REF3	29	O	BCPO	54	I	R20	79	O	IOCK
5	I	VIN3	30	I	EOPX	55	I	FBID	80	O	CS
6	O	VOT3	31	O	EOPO	56	I	DO	81	I/O	MO0
7	I	AI3	32	–	AGND	57	I	GBD	82	–	GND
8	I	ACPI	33	I	AI2	58	I	GAT	83	I/O	MO1
9	–	AGND	34	I	DOPI	59	–	GND	84	I/O	MO2
10	I	ACPX	35	I	DOPX	60	I	GH	85	I/O	MO3
11	O	ACPO	36	O	DOPO	61	O	WCP	86	I/O	MO4
12	I	SMPL	37	I	VCOI	62	O	ACP	87	I/O	MO5
13	I	CHIN	38	I	VCEN	63	O	TOUT	88	I/O	MO6
14	I	BOPX	39	I	MD1	64	O	AZ2	89	I/O	MO7
15	I	BOPO	40	I	MD2	65	O	AZ1	90	I	AMD
16	I	SHC1	41	I	INT	66	O	WZ	91	I	VIN2
17	I	SHC2	42	I	YC	67	I	CKN	92	I	REF1
18	I	SH2I	43	I	TMOD	68	O	GCK	93	I	REF2
19	O	ER1	44	I	TCK	69	O	ACK	94	I	VIN1
20	O	ER2	45	I	TDAT	70	O	XCK	95	I	AOPI
21	–	AVDD	46	I	BTS	71	–	VDD	96	I	AOPX
22	I	COPI	47	I	REST	72	O	CH	97	O	AOPO
23	I	COPX	48	–	VDD	73	O	SSH	98	–	AVDD
24	O	COPO	49	I	DDF	74	O	DCP	99	I	AI1
25	I	FOPX	50	O	SHO	75	I	ERR	100	I	CCPI

CXD8176AQ (NEC)

C-MOS DUAL PORT RAM CONTROLLER
– TOP VIEW –

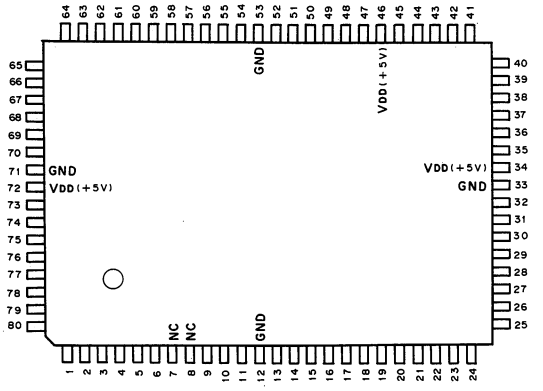

(VDD = +5 V)

PIN No.	I/O	SIGNAL	PIN No.	I/O	SIGNAL	PIN No.	I/O	SIGNAL	PIN No.	I/O	SIGNAL
1	I/O	DOL	21	I/O	D7R	41	I/O	D6M	61	I	A10L
2	I	$\overline{WRL}$	22	I/O	D6R	42	I/O	D5M	62	I	A9L
3	I	$\overline{RDL}$	23	I/O	D5R	43	I/O	D4M	63	I	A8L
4	O	$\overline{WAITL}$	24	I/O	D4R	44	I/O	D3M	64	I	A7L
5	I	$\overline{CSL}$	25	I/O	D3R	45	I/O	D2M	65	I	A6L
6	I	$\overline{CKL}$	26	I/O	D2R	46	–	VDD	66	I	A5L
7	–	NC	27	I/O	D1R	47	I/O	D1M	67	I	A4L
8	–	NC	28	I/O	D0R	48	I/O	D0M	68	I	A3L
9	I	A10R	29	I	$\overline{WRR}$	49	O	A0M	69	I	A2L
10	I	A9R	30	I	$\overline{RDR}$	50	O	A1M	70	I	A1L
11	I	A8R	31	O	$\overline{WAITR}$	51	O	A2M	71	–	GND
12	–	GND	32	I	$\overline{CSR}$	52	O	A3M	72	–	VDD
13	I	A7R	33	–	GND	53	–	GND	73	I	A0L
14	I	A6R	34	–	VDD	54	O	A4M	74	I/O	D7L
15	I	A5R	35	I	CKR	55	O	A5M	75	I/O	D6L
16	I	A4R	36	I	$\overline{CKT}$	56	O	A6M	76	I/O	D5L
17	I	A3R	37	O	$\overline{WEM}$	57	O	A7M	77	I/O	D4L
18	I	A2R	38	O	$\overline{OEM}$	58	O	A8M	78	I/O	D3L
19	I	A1R	39	O	$\overline{CEM}$	59	O	A9M	79	I/O	D2L
20	I	A0R	40	I/O	D7M	60	O	A10M	80	I/O	D1L

CXD8243AM (SONY) FLAT PACKAGE

C-MOS DIGITAL YC SEPARATOR/DECODER/CTDM CLOCK GENERATOR
– TOP VIEW –

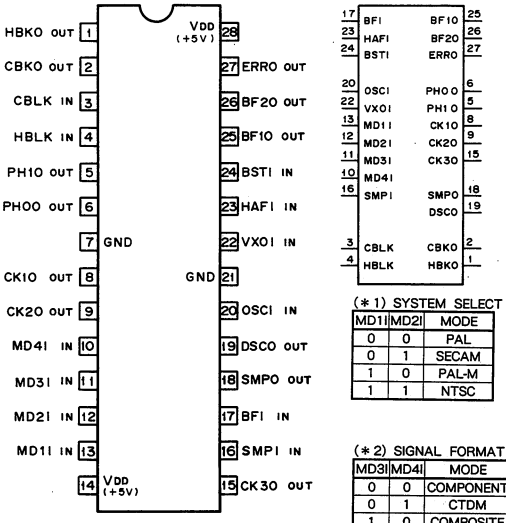

(*1) SYSTEM SELECT

MD1I	MD2I	MODE
0	0	PAL
0	1	SECAM
1	0	PAL-M
1	1	NTSC

(*2) SIGNAL FORMAT SELECT

MD3I	MD4I	MODE
0	0	COMPONENT
0	1	CTDM
1	0	COMPOSITE
1	1	S-VIDEO

0 ; LOW LEVEL
1 ; HIGH LEVEL

INPUT

BFI ; BURST FLAG
BSTI ; BURST FOR PHASE COMPARISON
CBLK ; CHROMA BLANKING PULSE
HAFI ; TRIGGER PULSE FOR BURST SAMPLING
HBLK ; H BLANKING PULSE
MD1, 2I ; SYSTEM SELECT (*1)
MD3, 4I ; SIGNAL FORMAT SELECT (*2)
OSCI ; H LOCK LOOP VCO
SMPI ; TRAPEZOID SAMPLING PULSE OF THE H LOCK LOOP
VXOI ; BURST LOCK LOOP VCXO

OUTPUT

BF1, 2O ; BURST FLAG
CBKO ; CHROMA BLANKING PULSE
CK1 – 3O ; CLOCK, SELECTED BY MODE
DSCO ; TRAPEZOID GENERATOR DISCHARGE PULSE
ERRO ; BURST PHASE COMPARISON ERROR
HBKO ; H BLANKING PULSE
PH0O ; 2FSC
PH1O ; FSC
SMPO ; TRAPEZOID SAMPLING PULSE OF THE H LOCK LOOP

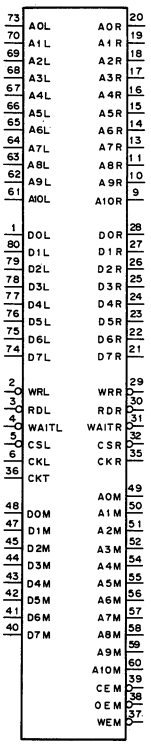

INPUT

A0L – A10L ; ADDRESS BUS OF PORT L
A0R – A10R ; ADDRESS BUS OF PORT R
CKL ; CLOCK OF PORT L
CKR ; CLOCK OF PORT R
CKT ; CLOCK
CSL ; CHIP SELECT OF PORT L
CSR ; CHIP SELECT OF PORT R
RDL ; READ STROBE OF PORT L
RDR ; READ STROBE OF PORT R
WRL ; WRITE STROBE OF PORT L
WRR ; WRITE STROBE OF PORT R

OUTPUT

A0M – A10M ; ADDRESS BUS FOR MEMORY DEVICE
CEM ; CHIP ENABLE FOR MEMORY DEVICE
OEM ; OUTPUT ENABLE FOR MEMORY DEVICE
WAITL ; WAIT OF PORT L
WAITR ; WAIT OF PORT R
WEM ; WRITE ENABLE FOR MEMORY DEVICE

INPUT/OUTPUT

D0L – D7L ; DATA BUS OF PORT L
D0M – D7M ; DATA BUS FOR MEMORY DEVICE
D0R – D7R ; DATA BUS OF PORT R

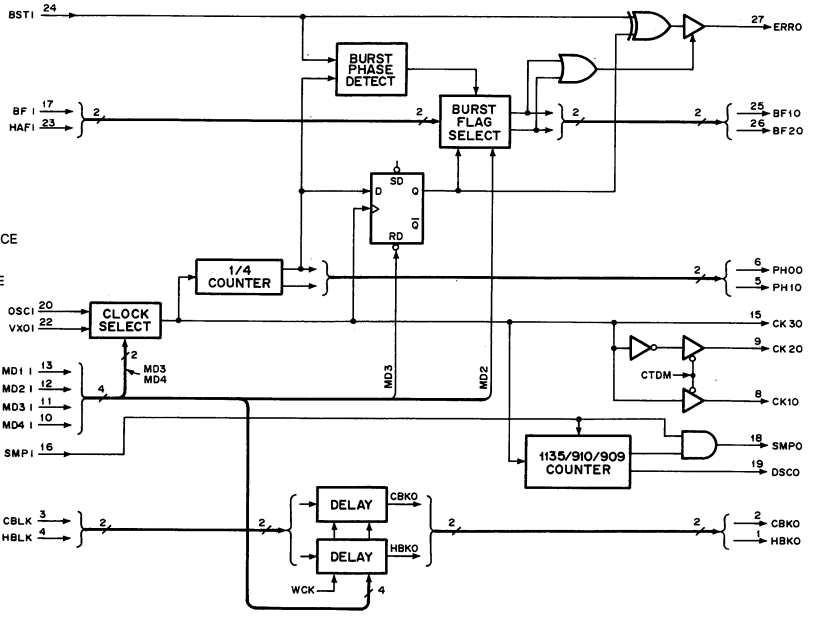

CXD8165Q (SONY) FLAT PACKAGE

C-MOS REFERENCE SYNC GENERATOR

– TOP VIEW –

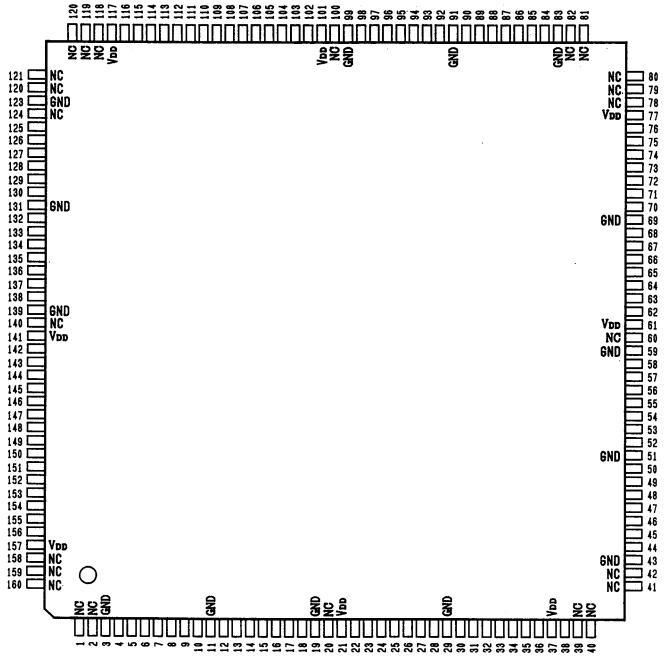

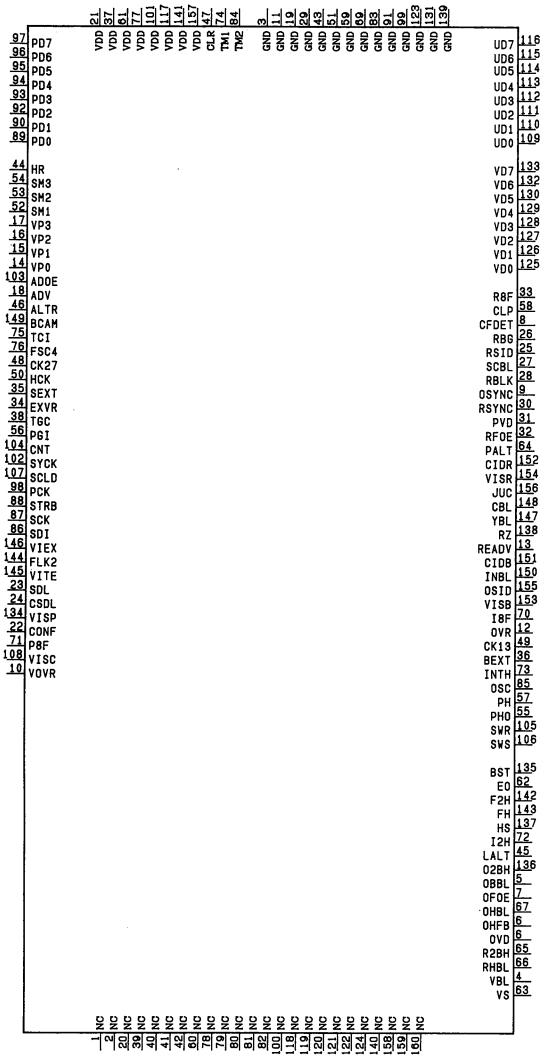

PIN No.	I/O	SIGNAL	PIN No.	I/O	SIGNAL	PIN No.	I/O	SIGNAL	PIN No.	I/O	SIGNAL
1	–	NC	41	–	NC	81	–	NC	121	–	NC
2	–	NC	42	–	NC	82	–	NC	122	–	NC
3	–	GND	43	–	GND	83	–	GND	123	–	GND
4	I/O	VBL	44	I	HR	84	I	TM2	124	–	NC
5	I/O	OBBL	45	I/O	LALT	85	O	OSC	125	O	VD0
6	I/O	OVD	46	I	ALTR	86	I	SD1	126	O	VD1
7	I/O	OFOE	47	I	CLR	87	I	SCK	127	O	VD2
8	O	CFDET	48	I	CK27	88	I	STRB	128	O	VD3
9	O	OSYNC	49	O	CK13	89	I/O	PD0	129	O	VD4
10	I	VOVR	50	I	HCK	90	I/O	PD1	130	O	VD5
11	–	GND	51	–	GND	91	–	GND	131	–	GND
12	O	OVR	52	I	SM1	92	I/O	PD2	132	O	VD6
13	O	READV	53	I	SM2	93	I/O	PD3	133	O	VD7
14	I	VP0	54	I	SM3	94	I/O	PD4	134	I	VISP
15	I	VP1	55	O	PHO	95	I/O	PD5	135	I/O	BST
16	I	VP2	56	I	PHI	96	I/O	PD6	136	I/O	O2BH
17	I	VP3	57	O	PH	97	I/O	PD7	137	I/O	HS
18	I	ADV	58	O	CLP	98	I	PCK	138	O	RZ
19	–	GND	59	–	GND	99	–	GND	139	–	GND
20	–	NC	60	–	NC	100	–	NC	140	–	NC
21	–	VDD	61	–	NC	101	–	VDD	141	–	VDD
22	I	CONF	62	I/O	EQ	102	I	SYCK	142	I/O	F2H
23	I	SDL	63	I/O	VS	103	I	ADOE	143	I/O	FH
24	I	CSDL	64	O	PALT	104	I	CNT	144	I	FLK2
25	O	RSID	65	I/O	R2BH	105	O	SWR	145	I	VITE
26	O	RBG	66	I/O	RHBL	106	O	SWS	146	I	VIEX
27	O	SCBL	67	I/O	OHBL	107	I	SCLD	147	O	YBL
28	O	RBLK	68	I/O	OHFB	108	I	VISC	148	O	CBL
29	–	GND	69	–	GND	109	O	UD0	149	I	BCAM
30	O	RSYNC	70	O	I8F	110	O	UD1	150	O	ENBL
31	O	RVD	71	I	P8F	111	O	UD2	151	O	CID8
32	O	REOE	72	I/O	I2H	112	O	UD3	152	O	CIDR
33	O	R8F	73	O	INTH	113	O	UD4	153	O	VISB
34	I	EXVR	74	I	TM1	114	O	UD5	154	O	VISR
35	I	SEXT	75	I	TCI	115	O	UD6	155	O	OSID
36	O	BEXT	76	I	FSC4	116	O	UD7	156	O	JUC
37	–	VDD	77	–	VDD	117	–	VDD	157	–	VDD
38	I	TGC	78	–	NC	118	–	NC	158	–	NC
39	–	NC	79	–	NC	119	–	NC	159	–	NC
40	–	NC	80	–	NC	120	–	NC	160	–	NC

CXK48324Q (SONY)

C-MOS 2.4M (960x306x8) BITS 3 PORTS VIDEO FIELD MEMORY
– TOP VIEW –

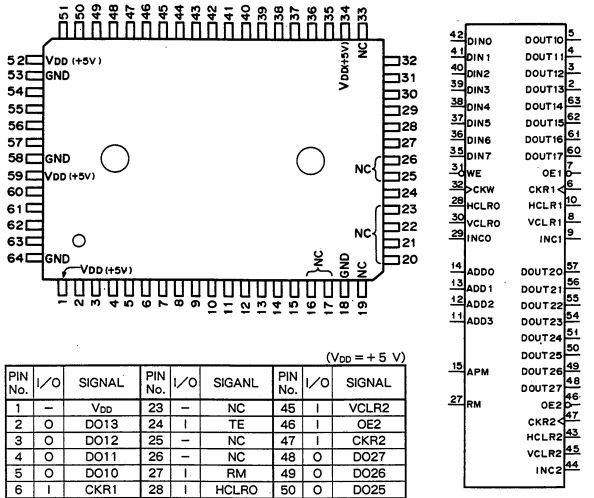

(VDD = + 5 V)

PIN No.	I/O	SIGNAL	PIN No.	I/O	SIGANL	PIN No.	I/O	SIGNAL
1	–	VDD	23	–	NC	45	I	VCLR2
2	O	DO13	24	I	TE	46	I	OE2
3	O	DO12	25	–	NC	47	I	CKR2
4	O	DO11	26	–	NC	48	O	DO27
5	O	DO10	27	I	RM	49	O	DO26
6	I	CKR1	28	I	HCLRO	50	O	DO25
7	I	OE1	29	I	INCO	51	O	DO24
8	I	VCLR1	30	I	VCLRO	52	–	Vob
9	I	INC1	31	I	WE	53	–	GND
10	I	HCLR1	32	I	CKW	54	O	DO23
11	I	ADD3	33	–	NC	55	O	DO22
12	I	ADD2	34	–	VDD	56	O	DO21
13	I	ADD1	35	I	DIN7	57	O	DO20
14	I	ADD0	36	I	DIN6	58	–	GND
15	I	APM	37	I	DIN5	59	–	VDD
16	–	NC	38	I	DIN4	60	O	DO17
17	–	NC	39	I	DIN3	61	O	DO16
18	–	GND	40	I	DIN2	62	O	DO15
19	–	NC	41	I	DIN1	63	O	DO14
20	–	NC	42	I	DIN0	64	–	GND
21	–	NC	43	I	HCLR2			
22	–	NC	44	I	INC2			

INPUT

ADD0 – ADD3	; ADDRESS INPUT
APM	; ADDRESS PRESET MODE ENABLE
CKR1, CKR2	; PORT 1 OR 2 SHIFT SIGNAL INPUT
CKW	; PORT 0 SHIFT SIGNAL INPUT
DIN0 – DIN7	; PORT 0 DATA INPUT
HCLR0 – HCLR2	; PORT 0 – 2 HORIZONTAL CLEAR
INC0 – INC2	; PORT 0 – 2 LINE INCREMENT
RM	; RECURSIVE MODE ENABLE
TE	; TEST MODE ENABLE
VCLR0 – VCLR2	; PORT 0 – 2 VERTICAL CLEAR
OE1, OE2	; PORT 1 OR 2 OUTPUT ENABLE
WE	; PORT 0 WRITE ENABLE

OUTPUT

DO10 – DO17	; PORT 1 DATA OUTPUT
DO20 – DO27	; PORT 2 DATA OUTPUT

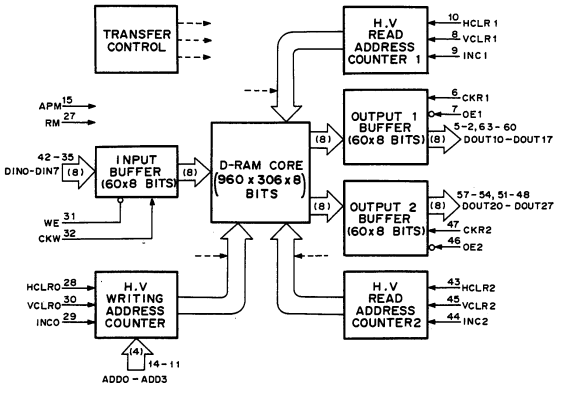

CXD8161AQ (SONY) FLAT PACKAGE

C-MOS DIGITAL Y/C SEPARATOR & CHROMA DECODER
– TOP VIEW –

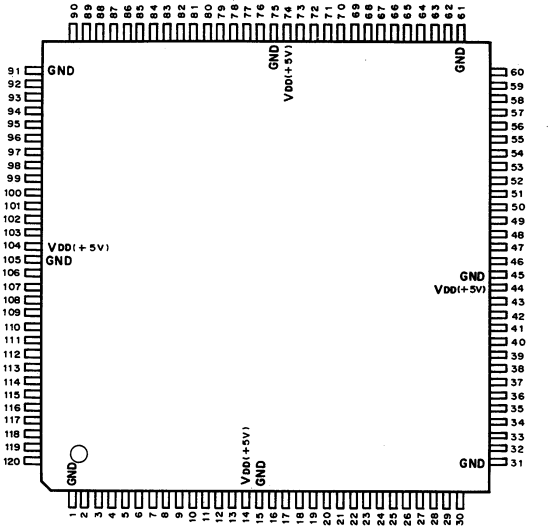

(VDD = + 5V)

PIN No.	I/O	SIGNAL	PIN No.	I/O	SIGNAL	PIN No.	I/O	SIGNAL	PIN No.	I/O	SIGNAL
1	–	GND	31	–	GND	61	–	GND	91	–	GND
2	O	PEW	32	I	DO9	62	O	YO2	92	O	BO1
3	O	PES	33	I	DO8	63	O	YO3	93	O	BO0
4	I	BI9	34	I	DO7	64	O	YO4	94	O	RO9
5	I	BI8	35	I	DO6	65	O	YO5	95	O	RO8
6	I	BI7	36	I	DO5	66	I	OE	96	I	HOD1
7	I	BI6	37	I	DO4	67	I	RND	97	I	HOD2
8	I	BI5	38	I	DO3	68	I	B67	98	I	HOD3
9	I	BI4	39	I	DO2	69	I	CO	99	I	HOD4
10	I	BI3	40	I	DO1	70	O	YO6	100	O	RO7
11	I	BI2	41	I	DO0	71	O	YO7	101	O	RO6
12	I	BI1	42	I	MRST	72	O	YO8	102	O	RO5
13	I	BI0	43	O	DRST	73	O	YO9	103	O	RO4
14	–	VDD	44	–	VDD	74	–	VDD	104	–	VDD
15	–	GND	45	–	GND	75	–	GND	105	–	GND
16	O	BCEW	46	I	DI9	76	O	BO9	106	O	RO3
17	O	BCES	47	I	DI8	77	O	BO8	107	O	RO2
18	O	RCEW	48	I	DI7	78	O	BO7	108	O	RO1
19	O	RCES	49	I	DI6	79	O	BO6	109	O	RO0
20	I	RI9	50	I	DI5	80	I	TMOD0	110	I	CLP
21	I	RI8	51	I	DI4	81	I	TMOD1	111	I	CBLK
22	I	RI7	52	I	DI3	82	I	TMOD2	112	I	YISC
23	I	RI6	53	I	DI2	83	I	TMOD3	113	I	HBLK
24	I	RI5	54	I	DI1	84	I	TMOD4	114	I	BPF
25	I	RI4	55	I	DI0	85	I	PM0	115	I	BW
26	I	RI3	56	I	CMOD2	86	I	PM1	116	I	LALT1
27	I	RI2	57	I	CMOD1	87	O	BO5	117	O	LALT0
28	I	RI1	58	I	CMOD0	88	O	BO4	118	I	PH1
29	I	RI0	59	O	YO0	89	O	BO3	119	I	PH0
30	I	HIZ	60	O	YO1	90	O	BO2	120	I	CLK

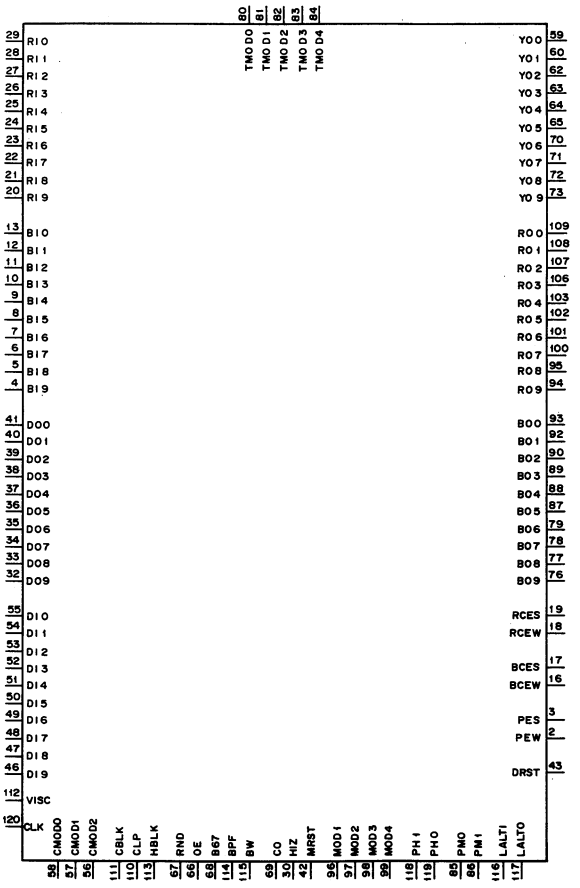

INPUT

	B67	; CORRELATION DETECT SENSITIVITY SELECT (H ; 6 BITS/L ; 7 BITS)
	BI0 – BI9	; B-Y DATA (COMPONENT MODE)
	BPF	; L ; BAND PASS FILTER SELECT
	BW	; COMPOSITE SIGNAL THROUGH OUT CONTROL
	CBLK	; CHROMA BLANKING PULSE
	CLK	; CLOCK
	CLP	; CLAMP PULSE
* 1)	CMOD0 – D2	; Y/C CORRECATION MODE SELECT
	CO	; CHROMA DECODE CONTROL
	DI0 – DI9	; 2H DELAY DATA (COMPOSITE MODE) for NTSC 4H DELAY DATA (COMPOSITE MODE) for PAL/PAL-M
	DO0 – DO9	; 1H DELAY DATA (COMPOSITE MODE) for NTSC 2H DELAY DATA (COMPOSITE MODE) for PAL/PAL-M
	HBLK	; H BLANKING PULSE
	HIZ	; PULSE CONTROL
	LALTI	; LINE ALTERNATE
* 2)	MODE1 – MODE4	; MODE SELECT
	MRST	; RESET
	OE	; OUTPUT ENABLE
	PH0, PH1	; REFERENCE PHASE for CHROMA DECODE and VLSC GENERATION
	PM0, PM1	; PHASE SHIFT CONTROL
	RI0 – RI9	; COMPOSITE DATA (COMPOSITE MODE) R-Y DATA (COMPONENT MODE) CHROMA DATA (CHROMA MODE)
	RND	; OUTPUT ROUND OFF SELECT
	TMOD0 – D4	; TEST MODE/BPF STAGE SELECT
	VISC	; VIRTICAL INTERVAL SUB-CARRIER CONTROL

OUTPUT

BCES	; B-Y CLAMP ERROR SENSE
BCEW	; B-Y CLAMP ERROR WIDTH
BO0 – BO9	; B-Y DATA (B 09 ; MSB)
DRST	; EXTERNAL DELAY LINE RESET
LALTO	; LINE ALTERNATE
PES	; PHASE ERROR SENSE
PEW	; PHASE ERROR WIDTH
RCES	; R-Y CLAMP ERROR SENSE
RCEW	; R-Y CLAMP ERROR WIDTH
RO0 – RO9	; R-Y DATA (RO9 ; MSB)
YO0 – YO9	; Y DATA (Y09 ; MSB)

* 1)

CMOD2	CMOD1	CMOD0	MODE
0	0	0	0-1 FIX
0	0	1	1-2 FIX
0	1	0	0-1-2 FIX
0	1	1	BPF FIX
1	0	0	0-1/1-2/0-1 ADAPTIVE
1	0	1	0-1/1-2/1-2 ADAPTIVE
1	1	0	0-1/1-2/0-1-2 ADAPTIVE
1	1	1	0-1/1-2/0-1-2/BPF ADAPTIVE

0 ; LOW LEVEL
1 ; HIGH LEVEL

0-1 ; UPPER 2 LINE COMB FILTER
1-2 ; LOWER 2 LINE COMB FILTER
0-1-2 ; UPPER/LOWER 3 LINE COMB FILTER

* 2)

MODE2	MODE1	MODE
0	0	PAL
0	1	PAL-M
1	0	SECAM
1	1	NTSC
MODE4	MODE3	MODE
0	0	COMPONENT
0	1	COMPOSITE
1	0	CTDM
1	1	CHROMA

0 ; LOW LEVEL
1 ; HIGH LEVEL

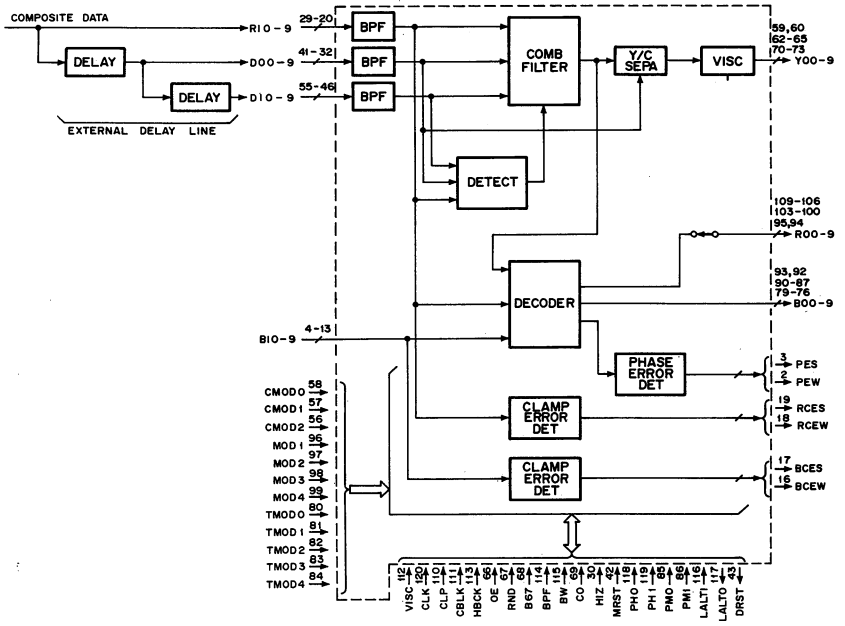

CXD8313Q (SONY)

C-MOS TBC

– TOP VIEW –

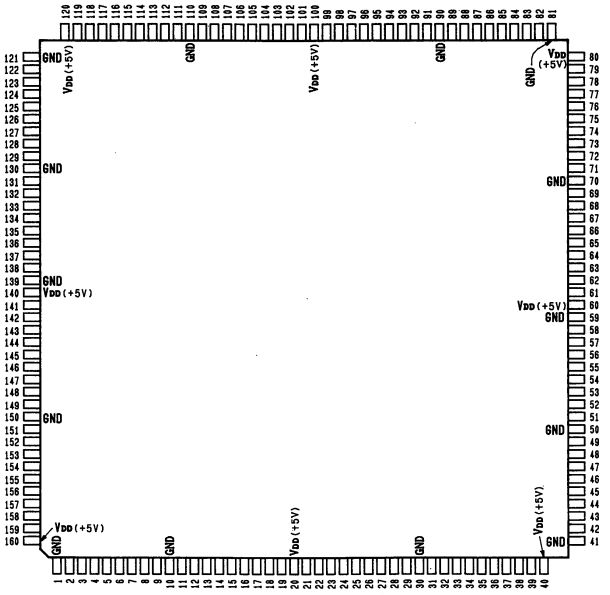

PIN No.	I/O	PIN NAME	PIN No.	I/O	PIN NAME	PIN No.	I/O	PIN NAME	PIN No.	I/O	PIN NAME
1	–	GND	41	–	GND	81	–	GND	121	–	GND
2	I	FWDXREV	42	I/O	RMAB	82	O	RBWLN	122	I	DIN9
3	I	X13	43	I/O	RVCLR	83	O	COMPBLK	123	I	DIN8
4	I	NOIPB	44	I/O	WMAB	84	O	VBLK2	124	I	DIN7
5	I	HEE	45	I/O	WVCLR	85	O	VBLK1	125	I	DIN6
6	I	HINPHASE	46	I/O	TDT0	86	O	ADVVBLK	126	I	DIN5
7	I	SHIFTINH	47	I	TST5	87	O	ADDTHRU	127	I	DIN4
8	O	VSCEXFP1	48	I	TST4	88	O	RDIZ	128	I	DIN3
9	O	VSCDTFP2	49	I	TST3	89	O	RCK	129	I	DIN2
10	–	GND	50	–	GND	90	–	GND	130	–	GND
11	I	OSCON	51	I	TST2	91	O	VCLR2	131	I	DIN1
12	I	MOD6	52	I	TST1	92	O	INC2	132	I	DIN0
13	I	DT	53	I	TST0	93	O	HCLR2	133	I	WCK
14	I	DTX3	54	I	RLMOFF	94	O	MRCK2	134	I	WZ
15	I	PBOE	55	I	FLMOFF	95	O	VCLR1	135	I	ADVWZ
16	I	DTV	56	I	MOD11	96	O	INC1	136	I	WCLP
17	I	SVV	57	I	MOD10	97	O	HCLR1	137	I	VISCCMUT
18	I	SWP	58	I	MOD7	98	O	MRCK1	138	I	PRCK
19	I	FRX3020	59	–	GND	99	O	VCLR0	139	–	GND
20	–	VDD	60	–	VDD	100	–	VDD	140	–	VDD
21	O	BINS	61	I/O	BID	101	O	INCO	141	I	PRZ
22	O	WINS	62	I/O	BIDDIR	102	O	HCLR0	142	I	PBSYNC
23	O	BWBLK	63	I	MOD4	103	O	DOCLR	143	O	WBLK
24	O	WHITECNT	64	I	MOD3	104	O	MWCK	144	I/O	GH
25	I	D0	65	I	MOD2	105	O	WE	145	O	SHW
26	I/O	PB16H	66	I	MOD1	106	O	DOUT0	146	I/O	SD01
27	I/O	PB2H	67	I	JUC	107	O	DOUT1	147	I/O	GB
28	O	COUNTERV	68	I	SGBLK	108	O	DOUT2	148	O	WDIZ
29	I/O	PBV	69	I	REFOE	109	O	DOUT3	149	I/O	FBID
30	–	GND	70	–	GND	110	–	GND	150	–	GND
31	O	WRITEV	71	I	READV	111	O	DOUT4	151	I/O	FFB
32	O	WOE	72	I	RZ	112	O	DOUT5	152	I/O	FRB
33	I/O	WVISCID	73	I	R456FH	113	O	DOUT6	153	O	FF30COFF
34	O	RVISCID	74	I	R2BH	114	O	DOUT7	154	O	FR30HDL
35	I/O	RVSET	75	I	R2FH	115	–	–	155	I	THRU2
36	I/O	WENP	76	I	HCK	116	O	DOUT8	156	I	THRU1
37	I/O	RENP	77	I	SDATA	117	O	DOUT9	157	I/O	NOSIG
38	I	LEVTST	78	I	SLD	118	O	SDO2WDO	158	O	PDSCONT
39	I	CLR	79	I	SCK	119	I	HOE	159	O	SPDPWM
40	–	VDD	80	–	VDD	120	–	VDD	160	–	VDD

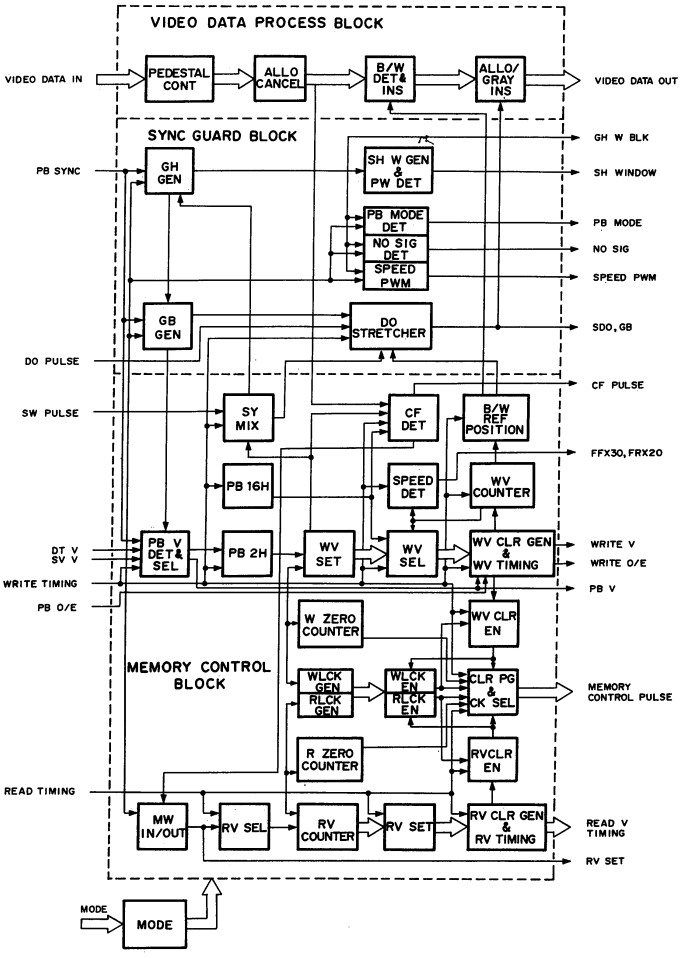

L78M09T-FA (SANYO) +9V 0.5A
PQ05SZ51 (SHARP) +5V 1A
POSITIVE VOLTAGE REGULATOR

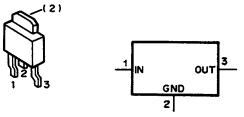

L79M05T-FA (SANYO) −5 V
L79M09T-FA (SANYO) −9 V
NEGATIVE VOLTAGE REGULATOR (500 mA)

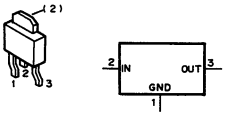

LA7205 (SANYO)
AGC AMP, INPUT SELECT, AGC DET, COMPARATOR
− SIDE VIEW −

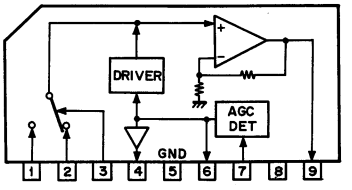

LM1881M (NS) FLAT PACKAGE
VIDEO SYNC SEPARATOR
− TOP VIEW −

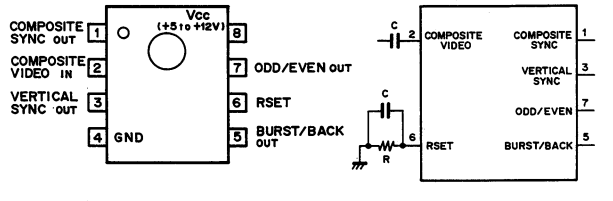

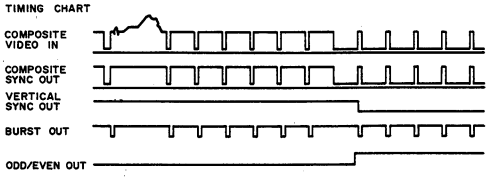

LM358P (TI)
UPC358C (NEC)
UPC358G2 (NEC) FLAT PACKAGE
DUAL OPERATIONAL AMPLIFIERS
− TOP VIEW −

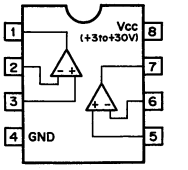

LM2903P (TI)
LM2903PS (TI) FLAT PACKAGE
NJM2903D (JRC)
DUAL VOLTAGE COMPARATORS
− TOP VIEW −

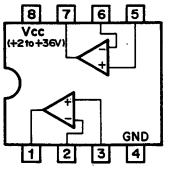

LM311PS (TI) FLAT PACKAGE
VOLTAGE COMPARATOR WITH STROBE
− TOP VIEW −

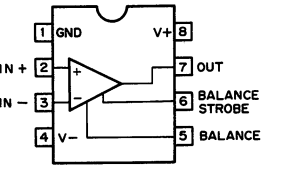

LB1620 (SANYO)

3-PHASE MOTOR DRIVER
– TOP VIEW –

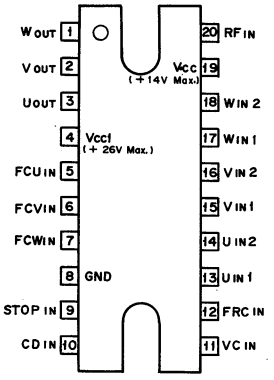

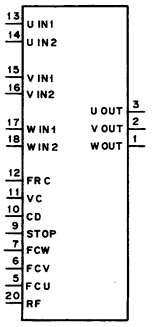

	SOURCE / SINK	INPUT U	V	W	FRC
1	W PHASE→V PHASE	1	1	0	0
	V PHASE→W PHASE				1
2	W PHASE→U PHASE	1	0	0	0
	U PHASE→W PHASE				1
3	V PHASE→W PHASE	0	0	1	0
	W PHASE→V PHASE				1
4	U PHASE→V PHASE	0	1	0	0
	V PHASE→U PHASE				1
5	V PHASE→U PHASE	1	0	1	0
	U PHASE→V PHASE				1
6	U PHASE→W PHASE	0	1	1	0
	W PHASE→U PHASE				1

0 ; LOW LEVEL
1 ; HIGH LEVEL

INPUT
CD ; CURRENT DETECTION
FCU ; PHASE COMPENSATION
FCV ; PHASE COMPENSATION
FCW ; PHASE COMPENSATION
FRC ; DIRECTION CONTROL
RF ; CURRENT DETECTION
STOP ; OVERCURRENT PROTECTION
UIN1, UIN2 ; U PHASE HALL ELEMENT
VC ; SPEED/PHASE CONTROL
VIN1, VIN2 ; V PHASE HALL ELEMENT
WIN1, WIN2 ; W PHASE HALL ELEMENT

OUTPUT
U OUT ; U PHASE OUTPUT
V OUT ; V PHASE OUTPUT
W OUT ; W PHASE OUTPUT

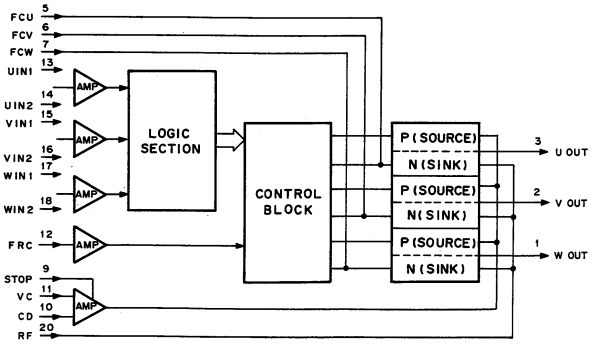

HD6435348RA00F (HITACHI)

C-MOS 8-BIT 1-CHIP MICROCOMPUTER
– TOP VIEW –

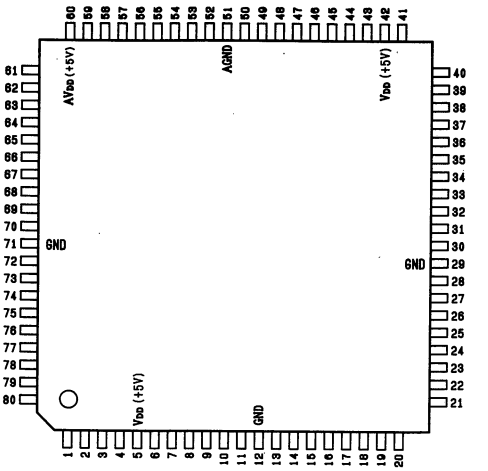

AVDD, VDD = (+5V)

PIN No.	I/O	SIGNAL	PIN No.	I/O	SIGNAL
1	I/O	P21/R/$\overline{W}$	41	I/O	P63/PM3/$\overline{IRQ_5}$/A19
2	I/O	P22/$\overline{DS}$	42	–	VDD
3	I/O	P23/$\overline{RD}$	43	I/O	P70/TMCI
4	I/O	P24/$\overline{WR}$	44	I/O	P71/FTI1
5	–	VDD	45	I/O	P72/FTI2
6	I	MD0	46	I/O	P73/FTI3/TMRI
7	I	MD1	47	I/O	P74/FTOB1/FTCI1
8	I	MD2	48	I/O	P75/FTOB2/FTCI2
9	I	$\overline{STBY}$	49	I/O	P76/FTOB3/FTCI3
10	I	$\overline{RES}$	50	I/O	P77/FTOA1
11	I	NMI	51	–	AGND
12	–	GND	52	I	P80/AN0
13	I/O	P30/D0	53	I	P81/AN1
14	I/O	P31/D1	54	I	P82/AN2
15	I/O	P32/D2	55	I	P83/AN3
16	I/O	P33/D3	56	I	P84/AN4
17	I/O	P34/D4	57	I	P85/AN5
18	I/O	P35/D5	58	I	P86/AN6
19	I/O	P36/D6	59	I	P87/AN7
20	I/O	P37/D7	60	–	AVDD
21	I/O	P40/A0	61	I/O	P90/FTOA2
22	I/O	P41/A1	62	I/O	P91/FTOA3
23	I/O	P42/A2	63	I/O	P92/TXD2/PW1
24	I/O	P43/A3	64	I/O	P93/RXD2/PW2
25	I/O	P44/A4	65	I/O	P94/SCK2/PW3
26	I/O	P45/A5	66	I/O	P95/TXD1
27	I/O	P46/A6	67	I/O	P96/RXD1
28	I/O	P47/A7	68	I/O	P97/SCK1
29	–	GND	69	I	EXTAL
30	I/O	P50/A1	70	I	XTAL
31	I/O	P51/A2	71	–	GND
32	I/O	P52/A10	72	I/O	P10/ϕ
33	I/O	P53/A11	73	I/O	P11/E
34	I/O	P54/A12	74	I/O	P12/$\overline{BACK}$
35	I/O	P55/A13	75	I/O	P13/$\overline{BREQ}$
36	I/O	P56/A14	76	I/O	P14/$\overline{WAIT}$
37	I/O	P57/A15	77	I/O	P15/$\overline{IRQ0}$
38	I/O	P60/$\overline{IRQ_2}$/A16	78	I/O	P16/$\overline{IRQ1}$/$\overline{ADTRG}$
39	I/O	P61/PM1/$\overline{IRQ_3}$/A17	79	I/O	P17/TMO
40	I/O	P62/PM2/$\overline{IRQ_4}$/A18	80	I/O	P20/$\overline{AS}$

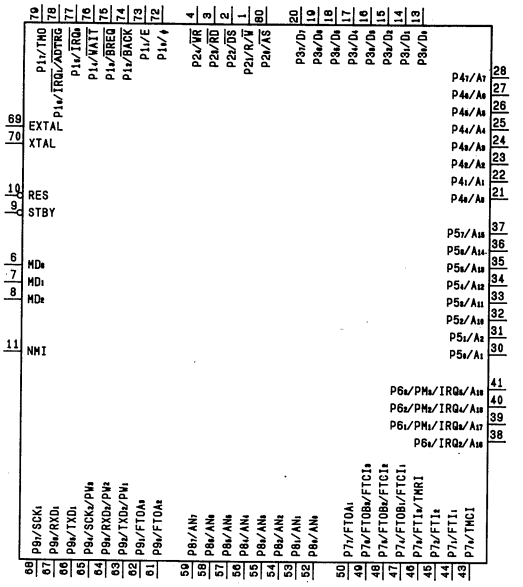

INPUT

ADTRG	; EXTERNAL TRIGGER
AN0 – AN7	; ANALOG DATA
BREQ	; BUS REQUEST
EXTAL	; CONNECTED TO CRYSTAL OSCILLATOR
FTCI1 – FTCI3	; FRT COUNTER CLOCK (CHANNEL 1 TO 3)
FTI1 – FTI3	; FRT INPUT CAPTURE (CHANNEL 1 TO 3)
IRQ0 – IRQ5	; INTERRUPTION REQUEST 0 AND 1
MD0 – MD2	; MODE SETTING
NMI	; NON MASKABLE INTERRUPTION
P80 – P87	; PORT 8
RES	; RESET
RXD1, 2	; RECEIVE DATA
STBY	; STANDBY .
TMCI	; 8-BIT TIMER CLOCK
TMRI	; 8-BIT TIMER COUNTER RESET
WAIT	; WAIT
XTAL	; CONNECTED TO CRYSTAL OSCILLATOR

OUTPUT

A0 – A19	; ADDRESS BUS
AS	; ADDRESS STROBE
BACK	; BUS REQUEST ACKNOWLEDGE
DS	; DATA STROBE
E	; ENABLE CLOCK
FTOA1 – FTOA3	; FRT OUTPUT COMPARE A (CHANNEL 1 TO 3)
FTOB1 – FTOB3	; FRT OUTPUT COMPARE B (CHANNEL 1 TO 3)
PW1 – PW3	; PWM TIMER (CHANNEL 1 TO 3)
R/W	; READ/WRITE
RD	; READ
TMO	; 8-BIT TIMER
TXD1, 2	; SEND DATA
WR	; WRITE
Φ	; SYSTEM CLOCK

INPUT/OUTPUT

D0 – D7	; DATA BUS
P10 – P17	; PORT 1
P20 – P24	; PORT 2
P30 – P37	; PORT 3
P40 – P47	; PORT 4
P50 – P57	; PORT 5
P60 – P63	; PORT 6
P70 – P77	; PORT 7
P90 – P97	; PORT 9
SCK1, 2	; SERIAL CLOCK

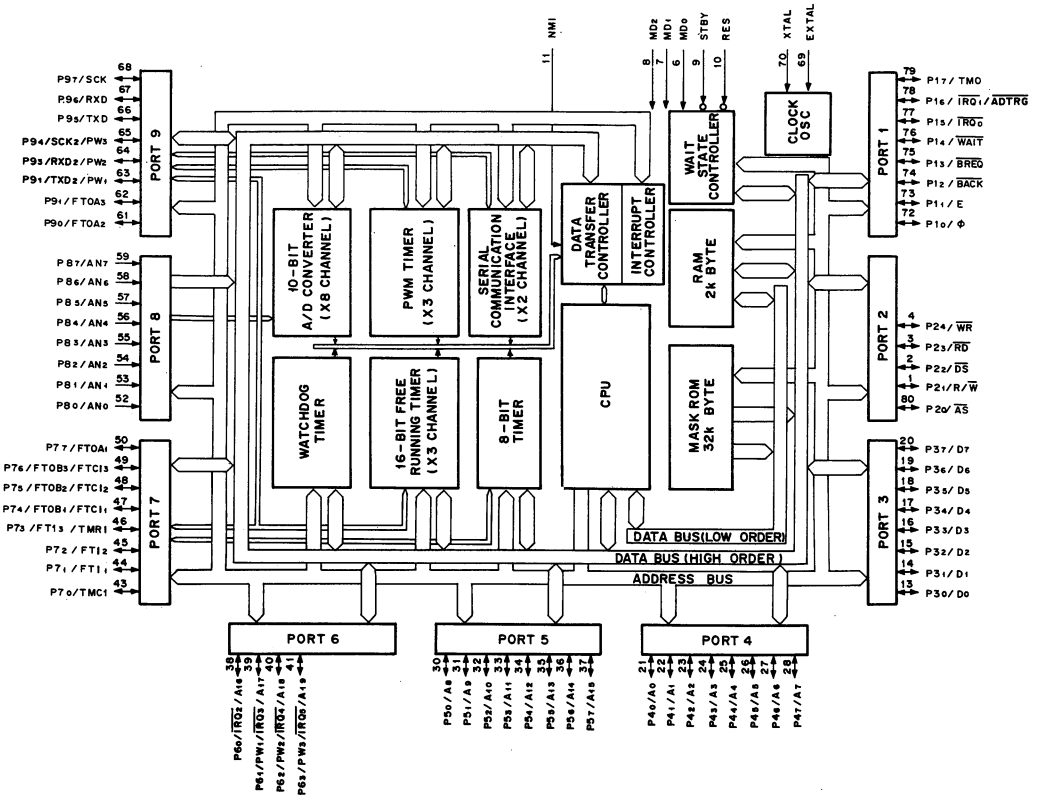

M51957BFP (MITSUBISHI) FLAT PACKAGE

VOLTAGE DETECTOR

– TOP VIEW –

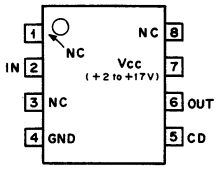

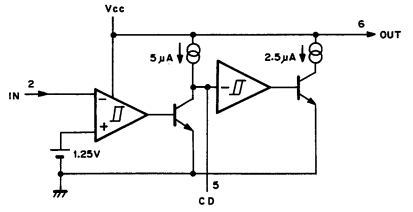

M51957BL (MITSUBISHI)

VOLTAGE DETECT DELAY

– PRINTED SIDE VIEW –

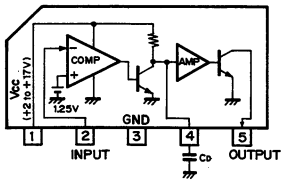

TIMING CHART

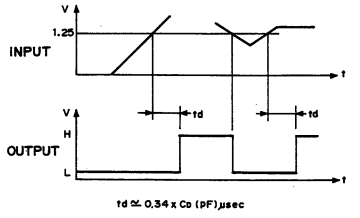

$t_d \simeq 0.34 \times C_D\ (pF)\ \mu sec$

M51958A (MITSUBISHI) FLAT PACKAGE

VOLTAGE DETECT DELAY

– TOP VIEW –

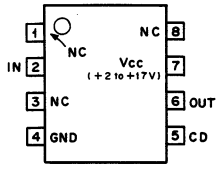

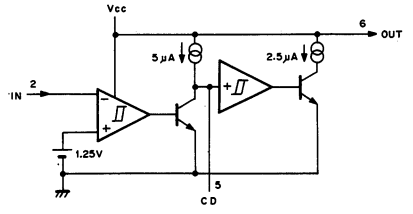

M54523P (MITSUBISHI)

BIPOLAR TRANSISTOR ARRAY WITH OPEN COLLECTOR

– TOP VIEW –

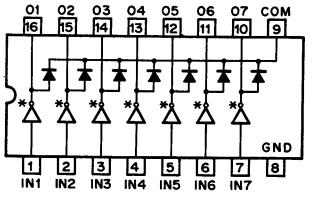

COM : COMMON

M54532P (MITSUBISHI)

DARLINGTON TRANSISTOR ARRAY WITH CLAMP DIODE

– TOP VIEW –

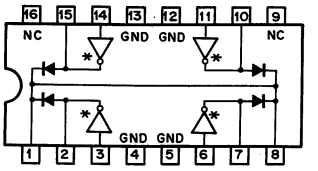

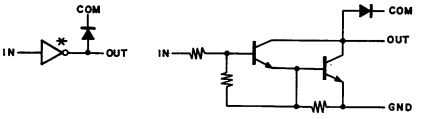

MB4002PF (FUJITSU) FLAT PACKAGE

HIGH SPEED VOLTAGE COMPARATOR

– TOP VIEW –

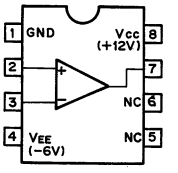

MB88201 (FUJITSU)

C-MOS 4-BIT MICROCOMPUTER

– TOP VIEW –

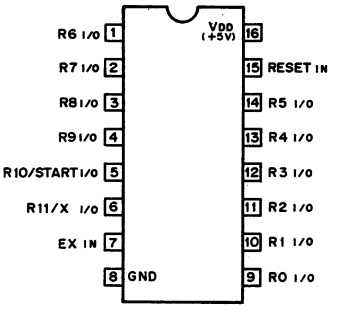

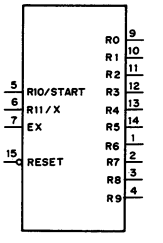

EX ; EXTERNAL X'TAL IN
R0–R11 ; I/O PORT(R) IN/OUT
RESET ; RESET IN
START ; STANDBY RELEASE IN
R11/X ; EXT CLOCK IN/INT CLOCK OUT

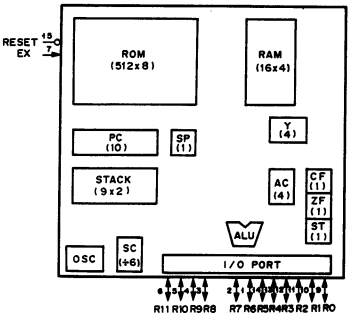

MB40568 (FUJITSU) FLAT PACKAGE

MB40568PF (FUJITSU) FLAT PACKAGE

8BIT VIDEO A/D CONVERTER

– TOP VIEW –

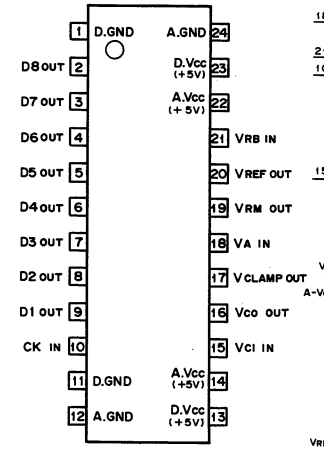

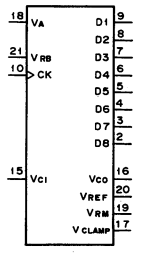

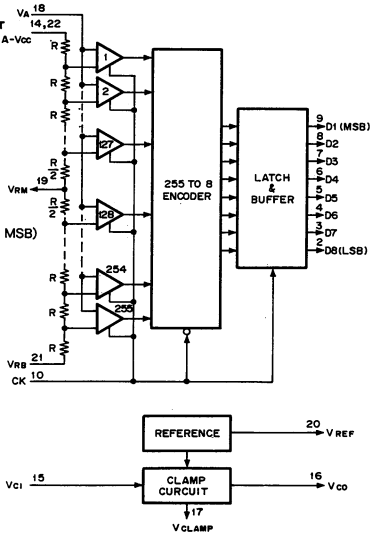

CK ; CLOCK INPUT
D1 – D8 ; DIGITAL SIGNAL OUTPUT (LSB to MSB)
V_A ; ANALOG SIGNAL INPIUT
V_{CI} ; CLAMP CURCUIT INPUT
V_{CO} ; CLAMP CURCUIT OUTPUT
V_{CLAMP} ; CLAMP DC OUTPUT
V_{RB} ; ANALOG REFERENCE DC INPUT
V_{RM} ; MONITOR FOR REFERENCE DC
V_{REF} ; REFERENCE DC OUTPUT

MB88342PF (FUJITSU) FLAT PACKAGE

C-MOS 8-BIT D/A CONVERTER

– TOP VIEW –

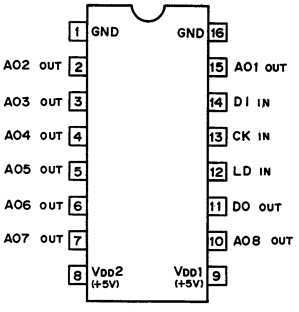

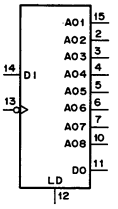

AO1 – AO8 ; 8-BIT D/A OUTPUTS
CK ; CLOCK INPUT
DI ; SERIAL DATA INPUT
DO ; DATA OUTPUT
LD ; DATA LOAD CONTROL INPUT (H : LOAD)

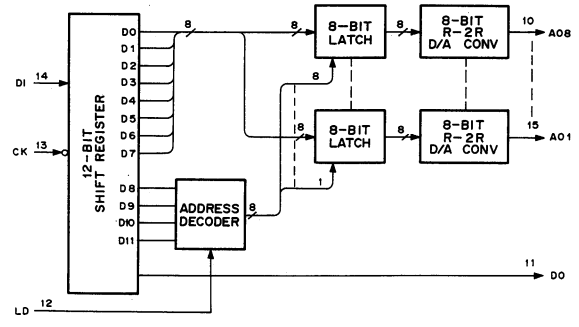

MC14051BF (MOTOROLA) FLAT PACKAGE

C-MOS 8-CHANNEL ANALOG MULTIPLEXER/DEMULTIPLEXER

– TOP VIEW –

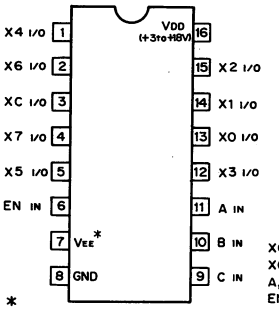

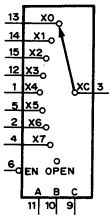

CONTROL INPUTS				SELECTED CHANNEL
EN	SELECT			
	C	B	A	
0	0	0	0	XO
0	0	0	1	X1
0	0	1	0	X2
0	0	1	1	X3
0	1	0	0	X4
0	1	0	1	X5
0	1	1	0	X6
0	1	1	1	X7
1	X	X	X	OPEN

0; LOW LEVEL
1; HIGH LEVEL
X; DON'T CARE

XO to X7; ANALOG INPUTS/OUTPUTS
XC; COMMON INPUT/OUTPUT
A,B,C; CHANNEL SELECT INPUT
EN; ENABLE INPUT

* V_{EE} ; $V_{DD} - V_{EE} = +3$ to $+18V$

MC14052BF (MOTOROLA) FLAT PACKAGE

C-MOS DUAL 4-CHANNEL ANALOG MULTIPLEXERS/DEMULTIPLEXERS

– TOP VIEW –

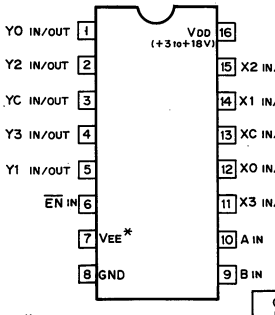

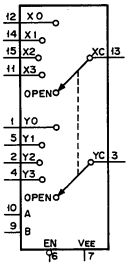

* V_{EE} ; $V_{DD} - V_{EE} = +3$ to $+18V$

CONTROL INPUTS			"ON" CHANNEL
EN	B	A	
0	0	0	0
0	0	1	1
0	1	0	2
0	1	1	3
1	X	X	OPEN

0; LOW LEVEL
1; HIGH LEVEL
X; DON'T CARE.

MC14053BCP (MOTOROLA)
MC14053BF (MOTOROLA) FLAT PACKAGE
UPD4053BC (NEC)

C-MOS TRIPLE 2-CHANNEL ANALOG MULTIPLEXERS/DEMULTIPLEXERS

– TOP VIEW –

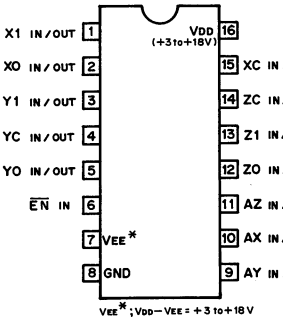

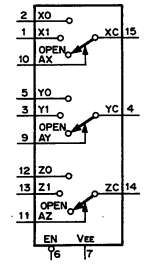

* V_{EE} ; $V_{DD} - V_{EE} = +3$ to $+18V$

CONT. INPUTS		ON CHANNEL
EN	A (X,Y,Z,)	
0	0	0
0	1	1
1	X	OPEN

0; LOW LEVEL
1; HIGH LEVEL
X; DON'T CARE.

MC14066BF (MOTOROLA) FLAT PACKAGE

C-MOS QUAD BILATERAL ANALOG SWITCH
– TOP VIEW –

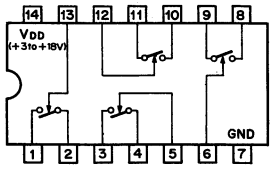

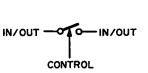

CONTROL	SWITCH
0	OFF
1	ON

0 ; LOW LEVEL
1 ; HIGH LEVEL

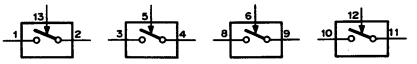

MC14069UBF (MOTOROLA)

C-MOS INVERTER
– TOP VIEW –

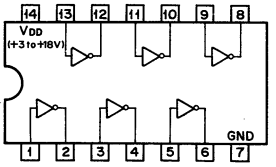

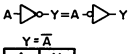

Y = $\overline{A}$	
A	Y
0	1
1	0

0 ; LOW LEVEL
1 ; HIGH LEVEL

MC14576BF (MOTOROLA) FLAT PACKAGE

C-MOS DUAL VIDEO AMPLIFIERS
– TOP VIEW –

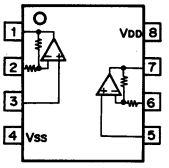

※VDD + | Vss | = +5V to +12V

MC34051M (MOTOROLA) FLAT PACKAGE

RS-422 DRIVER/RECEIVER
– TOP VIEW –

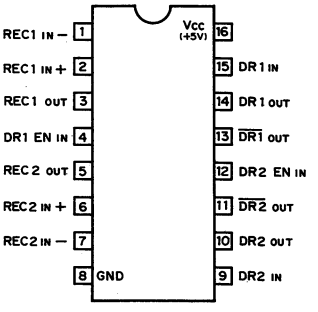

DR EN	MODE
0	DISABLE
1	ENABLE

0 ; LOW LEVEL
1 ; HIGH LEVEL

DR ; DRIVER
DR EN ; DRIVER ENABLE
REC ; RECEIVER

DRIVER CIRCUIT

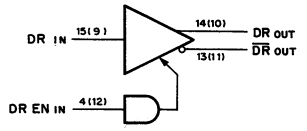

RECEIVER CIRCUIT

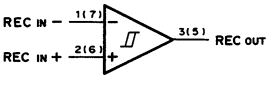

MC68HC05C8 (MOTOROLA)

C-MOS 8-BIT MICROCONTROLLER UNIT
– TOP VIEW –

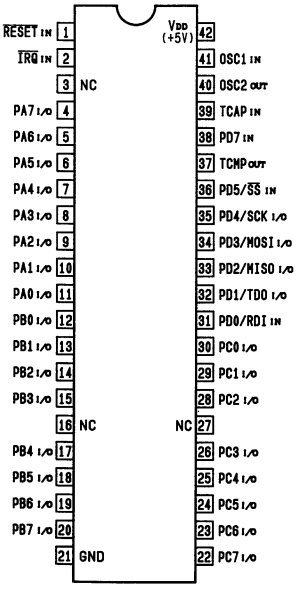

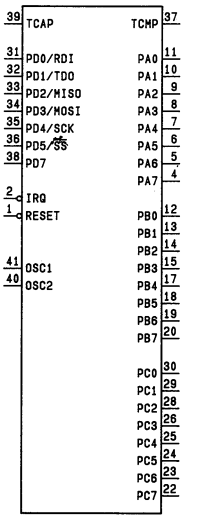

INPUT

IRQ	; INTERRUPT REQUEST
OSC1	; OSCILLATOR FREQUENCY
PD0 – PD5, PD7	; PROGRAMMABLE D PORT
RDI	; RECEIVING DATA
RESET	; RESET
SS	; SUB SELECT
TCAP	; CAPTURE FEATURE FOR THE ON-CHIP PROGRAMMABLE TIMER

OUTPUT

OSC2	; OSCILLATOR FREQUENCY
SCK	; SERIAL CLOCK
TCMP	; COMPARE FEATURE OF THE ON-CHIP TIMER
TDO	; TRANSMITION DATA

INPUT/OUTPUT

MISO	; MASTER INPUT, SUB OUTPUT
MOSI	; MASTER OUTPUT, SUB INPUT
PA0 – PA7	; PROGRAMMABLE A PORT
PB0 – PB7	; PROGRAMMABLE B PORT
PC0 – PC7.	; PROGRAMMABLE C PORT

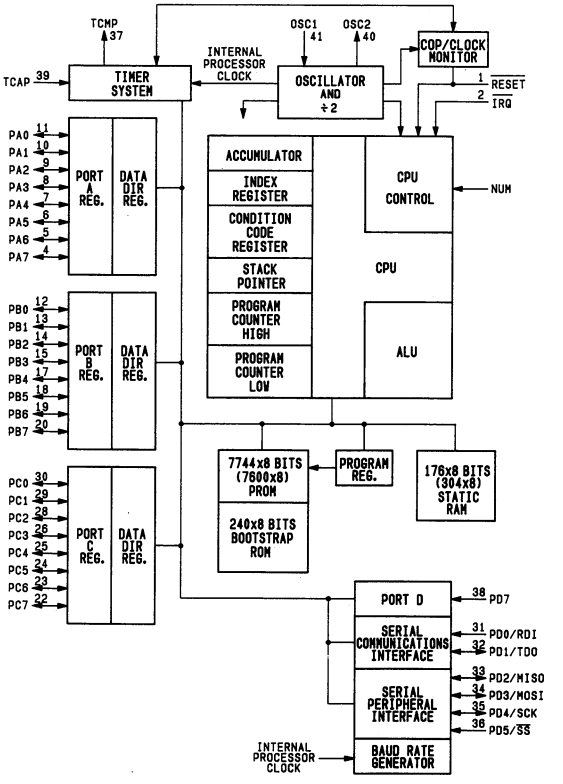

MC74HC4002F (MOTOROLA) FLAT PACKAGE

C-MOS 4-INPUT NOR GATE

– TOP VIEW –

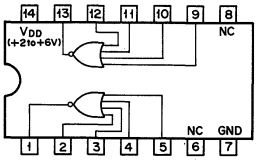

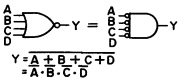

A	B	C	D	Y
0	0	0	0	1
X	X	X	1	0
X	X	1	X	0
X	1	X	X	0
1	X	X	X	0

0; LOW LEVEL
1; HIGH LEVEL
X; DON'T CARE

MC74HC173F (MOTOROLA) FLAT PACKAGE

C-MOS 4-BIT D-TYPE REGISTERS WITH 3-STATE OUTPUT

– TOP VIEW –

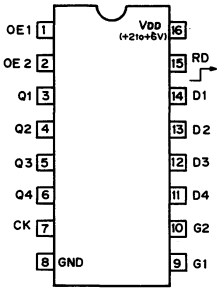

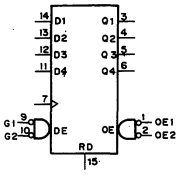

D1 – D4 ; DATA INPUT
Q1 – Q4 ; OUTPUT (3-STATE)
G1, G2 ; DATA ENABLE INPUT
OE1, OE2 ; OUTPUT ENABLE INPUT

INPUT							OUTPUT
RD	CK	DATA IN G1	DATA IN G2	D	OUTPUT EN OE1	OUTPUT EN OE2	Q
1	X	X	X	X	0	0	0
0	0	X	X	X	0	0	Q0
0	↓	1	X	X	0	0	Q0
0	↓	X	1	X	0	0	Q0
0	↓	0	0	0	0	0	0
0	↓	0	0	1	0	0	1
X	X	X	X	X	1	X	HI-Z
X	X	X	X	X	X	1	HI-Z

0 ; LOW LEVEL
1 ; HIGH LEVEL
X ; DON'T CARE
HI-Z ; HIGH IMPEDANCE
Q0 ; LEVEL OF Q BEFORE THE INDICATED INPUT CONDITIONS WERE STABLISHED

MC74HC4024N (MOTOROLA)

C-MOS 7-BIT BINARY COUNTERS

– TOP VIEW –

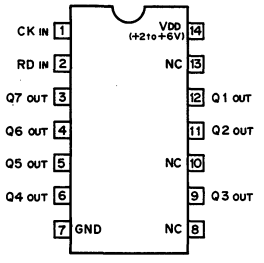

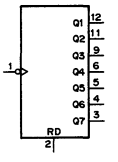

COUNT	INPUTS CK	INPUTS RD	OUTPUTS Q7	Q6	Q5	Q4	Q3	Q2	Q1
0	X	1	0	0	0	0	0	0	0
1	↓	0	0	0	0	0	0	0	1
2	↓	0	0	0	0	0	0	1	0
3	↓	0	0	0	0	0	0	1	1
125	↓	0	1	1	1	1	1	0	1
126	↓	0	1	1	1	1	1	1	0
127	↓	0	1	1	1	1	1	1	1
–	0	0	NO CHANGE						
–	1	0							

0; LOW LEVEL
1; HIGH LEVEL
X; DON'T CARE

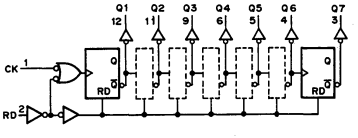

MS6264CLL-10FC (MOSEL) FLAT PACKAGE

C-MOS 64K (8kx8)-BIT STATIC RAM

– TOP VIEW –

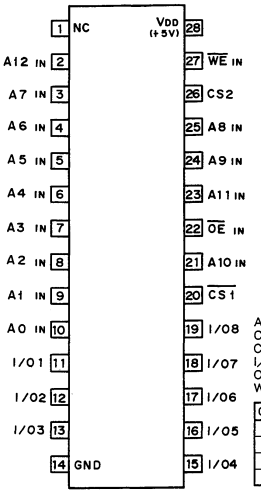

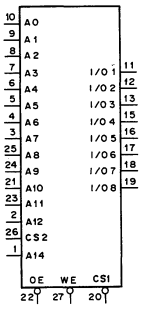

A0 – A12 ; ADDRESS INPUTS
CS1 ; CHIP SELECT 1 INPUT
CS2 ; CHIP SELECT 2 INPUT
I/O1 – I/O8 ; DATA INPUTS/OUTPUTS
OE ; OUTPUT ENABLE INPUT
WE ; WRITE ENABLE INPUT

CS1	CS2	OE	WE	MODE	I/O TERMINAL
1	X	X	X	NOT SELECT	HIGH IMPEDANCE
0	1	1	1	OUTPUT DISABLE	HIGH IMPEDANCE
0	1	0	1	READ	OUTPUT DATA
0	1	X	0	WRITE	INPUT DATA

0 ; LOW LEVEL
1 ; HIGH LEVEL
X ; DON'T CARE

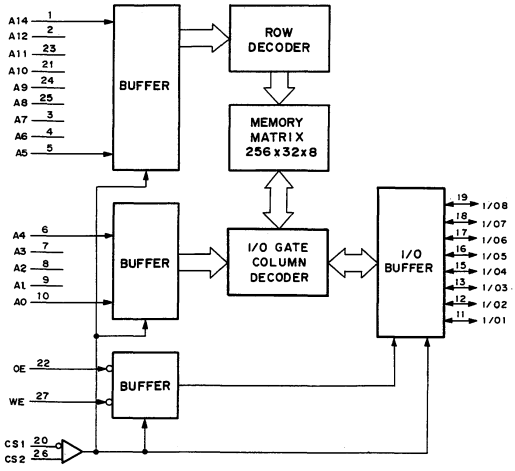

MC74HC4538AN (MOTOROLA)

C - MOS DUAL RETRIGGERABLE / NON - RETRIGGERABLE MONOSTABLE MULTIVIBRATOR
– TOP VIEW –

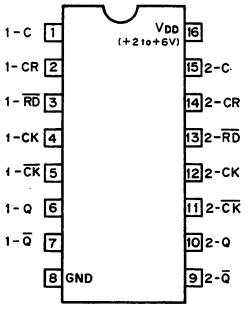

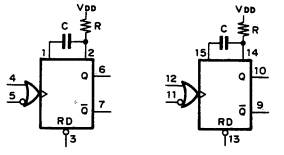

OUTPUT PULSE WIDTH = k·C·R

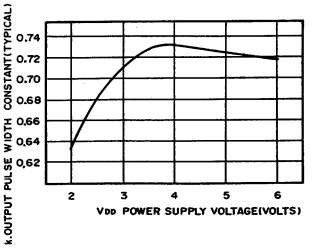

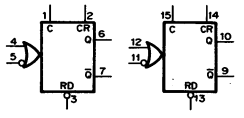

RETRIGGERABLE M.M.V

NON-RETRIGGERABLE M.M.V

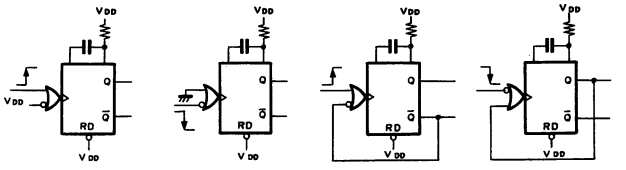

NJM2068DD (JRC)

LOW NOISE OPERATIONAL AMPLIFIER
– TOP VIEW –

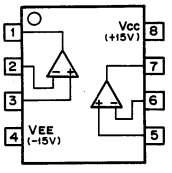

NJM360M (JRC) FLAT PACKAGE

HIGH SPEED VOLTAGE COMPARATOR
(TTL OUTPUT)
– TOP VIEW –

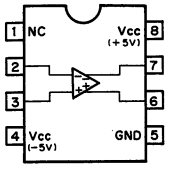

NJM4556M (JRC) FLAT PACKAGE
NJM4556M-A (JRC) FLAT PACKAGE

OPERATIONAL AMPLIFIER
(WIDE BAND, DECOMPENSATED)
– TOP VIEW –

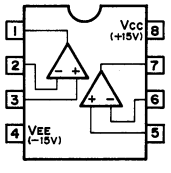

NJM4558D-D (JRC)
NJM4558D-FA (JRC)
NJM4558M (JRC) FLAT PACKAGE

DUAL OPERATIONAL AMPLIFIER
– TOP VIEW –

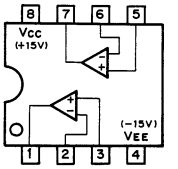

NJM78L09A (JRC) + 9V (100mA)
TA78L09S (TOSHIBA) + 9V (100mA)

POSITIVE VOLTAGE REGULATOR

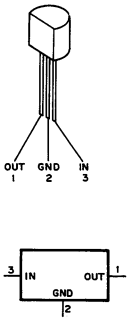

NJM78M09FA (JRC) + 9V

POSITIVE VOLTAGE REGULATOR (500mA)
– FRONT VIEW –

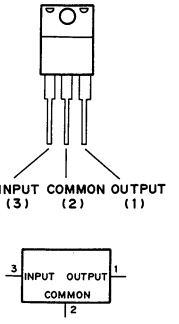

NJM79L05A (JRC) – 5V
NJM79L09A (JRC) – 9V

NEGATIVE VOLTAGE REGULATOR (100mA)

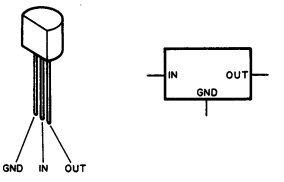

NJM79M09FA (JRC) – 9V
NEGATIVE VOLTAGE REGULATOR (500mA)
– FRONT VIEW –

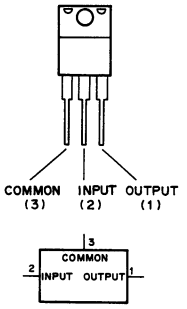

PQ30RV1 (SHARP) VARIABLE 1A
PQ30VB11 (SHARP) VARIABLE 1A
POSITIVE VOLTAGE REGULATOR

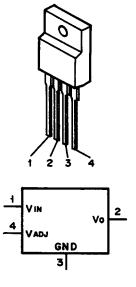

SC14S66F (MOTOROLA) CHIP PACKAGE
SC14S66FEL (MOTOROLA) CHIP PACKAGE
C-MOS BILATERAL ANALOG SWITCH

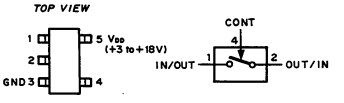

CONT	SWITCH
0	OFF
1	ON

0 ; LOW LEVEL
1 ; HIGH LEVEL

SC7S04F (MOTOROLA) CHIP PACKAGE
TC7S04F (TOSHIBA) CHIP PACKAGE
C-MOS INVERTER

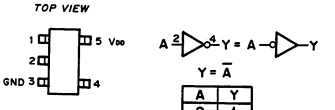

A	Y
0	1
1	0

0; LOW LEVEL
1 ; HIGH LEVEL

TYPE	VDD
7S04F 7SU04F	+2 to +6V
4S69F 4SU69F	+3 to +18V

SC7S32F (MOTOROLA) CHIP PACKAGE
TC7S32F (TOSHIBA) CHIP PACKAGE
C-MOS 2-INPUT OR GATE

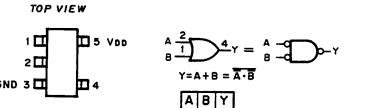

A	B	Y
0	0	0
0	1	1
1	0	1
1	1	1

0 ; LOW LEVEL
1 ; HIGH LEVEL

TYPE	VDD
7S32F 7S32FU	+2 to +6V
4S71F	+3 to +18V

SN74HC00AN (TI)
SN74HC00ANS (TI) FLAT PACKAGE
C-MOS QUAD 2-INPUT NAND GATES
– TOP VIEW –

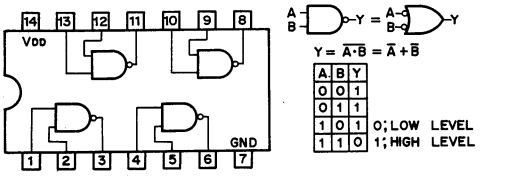

A	B	Y
0	0	1
0	1	1
1	0	1
1	1	0

0;LOW LEVEL
1;HIGH LEVEL

NOTE :

TYPE	VDD
TC74AC00 TYPE TC74VHC00	+2 to +5.5V
MC74HCT00N	+5V
74ACT00 TYPE	+4.5 to +5.5V
OTHER TYPES	+2 to +6V

SN74HC04ANS (TI) FLAT PACKAGE
SN74HCU04AN (TI)
SN74HCU04ANS (TI) FLAT PACKAGE
C-MOS HEX INVERTERS
– TOP VIEW –

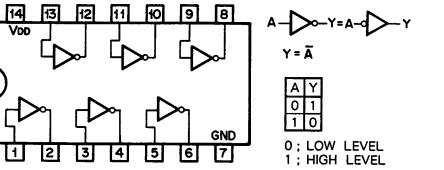

A	Y
0	1
1	0

0 ; LOW LEVEL
1 ; HIGH LEVEL

NOTE :

TYPE	VDD
74HCT04 TYPE	+5V
TC74AC04 TYPE TC74VHC04 TYPE	+2 to +5.5V
74ACT04 TYPE	+4.5 to +5.5V
OTHER TYPES	+2 to +6V

SN74HC08AN (TI)
SN74HC08ANS (TI) FLAT PACKAGE
C-MOS QUAD 2-INPUT AND GATES
– TOP VIEW –

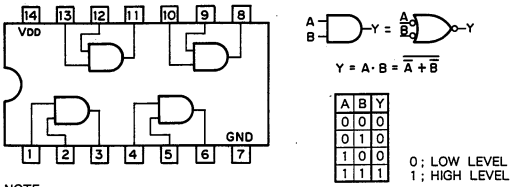

A	B	Y
0	0	0
0	1	0
1	0	0
1	1	1

0 ; LOW LEVEL
1 ; HIGH LEVEL

NOTE :

TYPE	VDD
TC74AC08F MC74ACT08M	+2 to +5.5V
TC40H	+2 to +8V
OTHER TYPES	+2 to +6V

SN74HC10ANS (TI) FLAT PACKAGE

C-MOS 3-INPUT NAND GATE
– TOP VIEW –

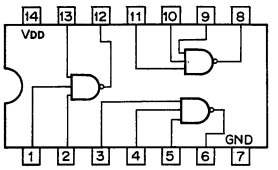

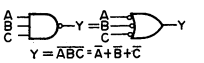

A	B	C	Y
0	0	0	1
0	0	1	1
0	1	0	1
0	1	1	1
1	0	0	1
1	0	1	1
1	1	0	1
1	1	1	0

0 ; LOW LEVEL
1 ; HIGH LEVEL

NOTE :

TYPE	VDD
TC40H	+ 2 to + 8V
OTHERS	+ 2 to + 6V

SN74HC11ANS (TI) FLAT PACKAGE

C-MOS 3-INPUT POSITIVE-AND GATE

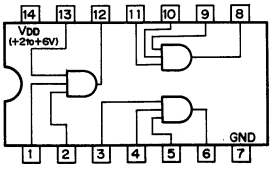

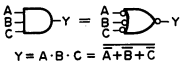

A	B	C	Y
0	0	0	0
0	0	1	0
0	1	0	0
0	1	1	0
1	0	0	0
1	0	1	0
1	1	0	0
1	1	1	1

0;LOW LEVEL
1;HIGH LEVEL

SN74HC138ANS (TI) FLAT PACKAGE

C-MOS 3-TO-8 LINE DECODER/DEMULTIPLEXER
– TOP VIEW –

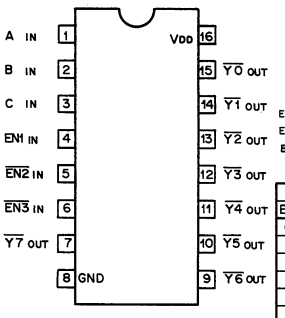

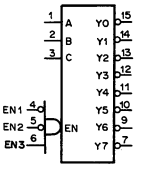

INPUTS				OUTPUTS							
EN	C	B	A	Y7	Y6	Y5	Y4	Y3	Y2	Y1	Y0
0	X	X	X	1	1	1	1	1	1	1	1
1	0	0	0	1	1	1	1	1	1	1	0
1	0	0	1	1	1	1	1	1	1	0	1
1	0	1	0	1	1	1	1	1	0	1	1
1	0	1	1	1	1	1	1	0	1	1	1
1	1	0	0	1	1	1	0	1	1	1	1
1	1	0	1	1	1	0	1	1	1	1	1
1	1	1	0	1	0	1	1	1	1	1	1
1	1	1	1	0	1	1	1	1	1	1	1

EN = $\overline{EN1} \cdot \overline{EN2} \cdot EN3$

0 ; LOW LEVEL
1 ; HIGH LEVEL
X ; DON'T CARE

NOTE :

TYPE	VDD
74HCT138 TYPE	+5V
74ACT138 TYPE	+4.5 to +5.5V
TC74AC138 TYPE TC74VHC138	+2 to +5.5V
OTHER TYPES	+2 to +6V

SN74HC157ANS (TI) FLAT PACKAGE

C-MOS QUAD 2-LINE-TO-1-LINE DATA SELECTOR/MULTIPLEXER
– TOP VIEW –

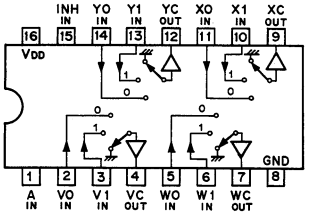

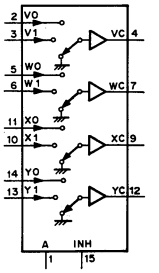

NOTE :

TYPE	VDD
74ACT157	+ 5V
TC74AC157P TC74AC157F	+ 2 to + 5.5V
TC40H	+ 2 to + 8V
OTHER TYPES	+ 2 to + 6V

CONT. IN		ON CHANNEL
INH	A	
0	0	0
0	1	1
1	X	GND

0 ; LOW LEVEL
1 ; HIGH LEVEL
X ; DON'T CARE

SN74HC161AN (TI)

C-MOS SYNCHRONOUS PRESETTABLE 4-BIT BINARY COUNTER
– TOP VIEW –

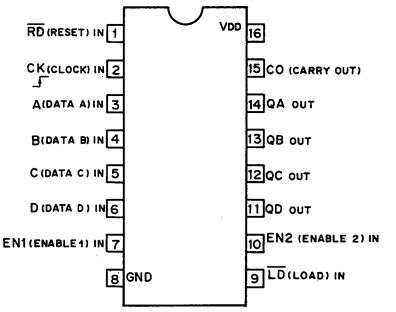

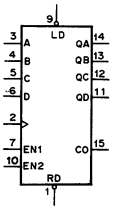

MODE SELECTION

CONTROL INPUTS				MODE
RD	LD	EN1	EN2	
0	X	X	X	RESET (ASYNCHRONOUS)
1	0	X	X	PRESET (SYNCHRONOUS)
1	1	0	X	NO COUNT
1	1	X	0	NO COUNT
1	1	1	1	COUNT

0 ; LOW LEVEL
1 ; HIGH LEVEL
X ; DON'T CARE

CARRY OUTPUT "CO"

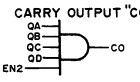

CO IS HIGH WHEN EN2 INPUT IS HIGH AND COUNT IS "15".

COUNT SEQUENCE

COUNT	OUTPUTS			
	QD	QC	QB	QA
0	0	0	0	0
1	0	0	0	1
2	0	0	1	0
3	0	0	1	1
4	0	1	0	0
5	0	1	0	1
6	0	1	1	0
7	0	1	1	1
8	1	0	0	0
9	1	0	0	1
10	1	0	1	0
11	1	0	1	1
12	1	1	0	0
13	1	1	0	1
14	1	1	1	0
15	1	1	1	1

NOTE :

TYPE	VDD
74ACT	+ 5V
TC40H	+ 2 to + 8V
OTHERS	+ 2 to + 6V

SN74HC164ANS (TI) FLAT PACKAGE

C-MOS 8-BIT SERIAL-IN/PARALLEL-OUT SHIFT REGISTER
– TOP VIEW –

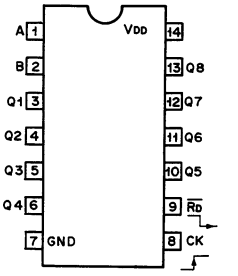

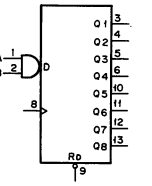

INPUTS				OUTPUTS			
RD	CK	A	B	Q1	Q2	----	Q8
0	X	X	X	0	0	0	0
1	0	X	X	Q1o	Q2o	----	Q8o
1	↑	1	1	1	Q1n	----	Q7n
1	↑	0	X	0	Q1n	----	Q7n
1	↑	X	0	0	Q1n	----	Q7n

0;LOW LEVEL
1;HIGH LEVEL
X;DON'T CARE

NOTE :

TYPE	VDD
TC74AC164 TYPE	+2 to +5.5V
OTHER TYPES	+2 to +6V

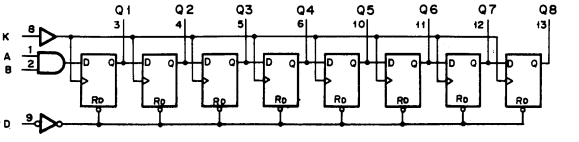

SN74HC192NS (TI) FLAT PACKAGE

C-MOS SYNCHRNOUS UP/DOWN DECADE COUNTER
– TOP VIEW –

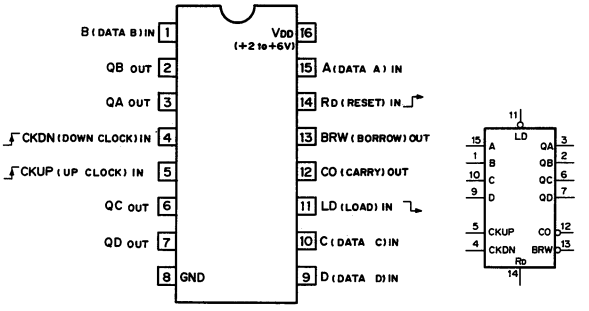

CONTROL INPUTS				MODE
RD	LD	CKUP	CKDN	
1	X	X	X	RESET TO ZERO
0	0	X	X	PRESET
0	1	↓	1	UP COUNT
0	1	1	↓	DOWN COUNT
0	1	1	1	NO COUNT

COUNT	OUTPUTS			
	QD	QC	QB	QA
0	0	0	0	0
1	0	0	0	1
2	0	0	1	0
3	0	0	1	1
4	0	1	0	0
5	0	1	0	1
6	0	1	1	0
7	0	1	1	1
8	1	0	0	0
9	1	0	0	1

UP COUNT
DOWN COUNT

$CO = \overline{CKUP} \cdot QA \cdot \overline{QB} \cdot \overline{QC} \cdot \overline{QD}$

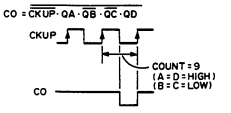

$BRW = \overline{CKDN} \cdot \overline{QA} \cdot \overline{QB} \cdot \overline{QC} \cdot \overline{QD}$

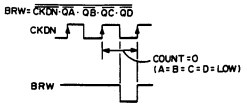

0 ; LOW LEVEL
1 ; HIGH LEVEL
X ; DON'T CARE

SN74HC266ANS (TI) FLAT PACKAGE

C-MOS 2-INPUT EXCLUSIVE-NOR GATE
– TOP VIEW –

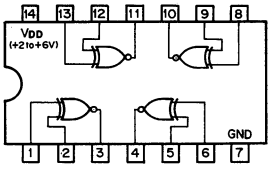

A	B	Y
0	0	1
0	1	0
1	0	0
1	1	1

0 ; LOW LEVEL
1 ; HIGH LEVEL

SN74HC27ANS (TI) FLAT PACKAGE

C-MOS 3-LINE POSITIVE-NOR GATE
– TOP VIEW –

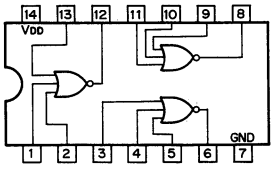

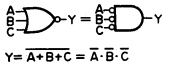

$Y = \overline{A+B+C} = \overline{A} \cdot \overline{B} \cdot \overline{C}$

A	B	C	Y
0	0	0	1
0	0	1	0
0	1	0	0
0	1	1	0
1	0	0	0
1	0	1	0
1	1	0	0
1	1	1	0

0 ; LOW LEVEL
1 ; HIGH LEVEL

NOTE :

TYPE	VDD
TC40H	+ 2 to + 8V
OTHERS	+ 2 to + 6V

SN74HC32ANS (TI) FLAT PACKAGE

C-MOS QUAD 2-INPUT OR GATES
– TOP VIEW –

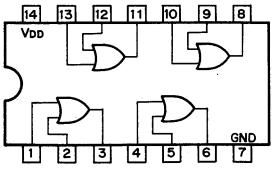

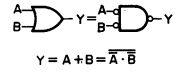

A	B	Y
0	0	0
0	1	1
1	0	1
1	1	1

0 ; LOW LEVEL
1 ; HIGH LEVEL

NOTE :

TYPE	VDD
TC74AC32 TYPE TC74VHC32	+2 to +5.5V
OTHER TYPES	+2 to +6V

SN74HC541ANS (TI) FLAT PACKAGE

C-MOS BUFFERS AND LINE DRIVERS WITH 3-STATE OUTPUTS
– TOP VIEW –

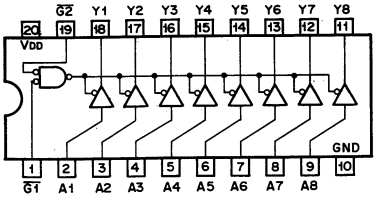

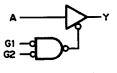

G1	G2	A	Y
0	0	0	0
0	0	1	1
1	X	X	HI-Z
X	1	X	HI-Z

0 ; LOW LEVEL
1 ; HIGH LEVEL
X ; DON'T CARE
HI-Z ; HIGH IMPEDANCE

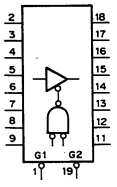

NOTE :

TYPE	VDD
AC/VHC	+2 to +5.5V
HC	+2 to +6V
ACT/BCT/HCT	+5V

SN74HC7266NS (TI) FLAT PACKAGE

C-MOS 2-INPUT EXCLUSIVE-NOR GATES
– TOP VIEW –

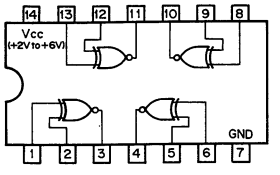

A	B	Y
0	0	1
0	1	0
1	0	0
1	1	1

0 ; LOW LEVEL
1 ; HIGH LEVEL

SN74HC74AN (TI)
SN74HC74ANS (TI) FLAT PACKAGE

C-MOS DUAL D-TYPE FLIP-FLOPS WITH DIRECT SET/RESET
– TOP VIEW –

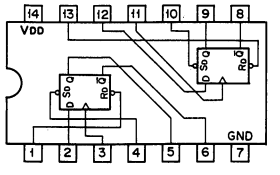

INPUTS				OUTPUTS	
$\overline{SD}$	$\overline{RD}$	CK	D	Qn+1	$\overline{Qn+1}$
0	1	X	X	1	0
1	0	X	X	0	1
0	0	X	X	1	1
1	1	↓	1	1	0
1	1	↓	0	0	1
1	1	0	X	Qn	$\overline{Qn}$

0 ; LOW LEVEL
1 ; HIGH LEVEL
X ; DON'T CARE

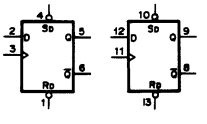

NOTE :

TYPE	VDD
TC74HCT74AF	+5V
TC74AC74 TYPE	+2 to +5.5V
74ACT74 TYPE	+4.5 to +5.5V
OTHER TYPES	+2 to +6V

SN74HC86ANS (TI) FLAT PACKAGE

C-MOS QUAD EXCLUSIVE OR GATES

– TOP VIEW –

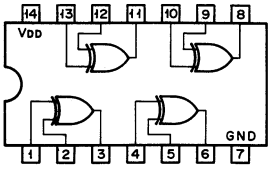

A	B	Y
0	0	0
0	1	1
1	0	1
1	1	0

0;LOW LEVEL
1;HIGH LEVEL

NOTE :

TYPE	VDD
TC74AC86 TYPE	+2 to +5.5V
OTHER TYPES	+2 to +6V

SRM2016M10 (SEIKO EPSON) FLAT PACKAGE

C-MOS 16384-BIT (2048x8) STATIC RAM

– TOP VIEW –

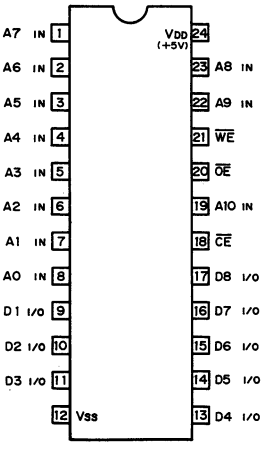

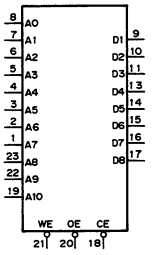

A0 – A10 ; ADDRESS INPUTS
$\overline{CE}$; CHIP ENABLE
D1 – D8 ; DATA INPUTS/OUTPUTS
$\overline{OE}$; OUTPUT ENABLE
$\overline{WE}$; WRITE ENABLE

INPUTS			FUNCTION
$\overline{CE}$	$\overline{OE}$	$\overline{WE}$	
1	X	X	NO SELECTION(HI-Z)
0	1	1	OUTPUT DISABLE(HI-Z)
0	0	1	READ
0	X	0	WRITE

0 ; LOW LEVEL
1 ; HIGH LEVEL
X ; DON'T CARE
HI-Z ; HIGH IMPEDANCE

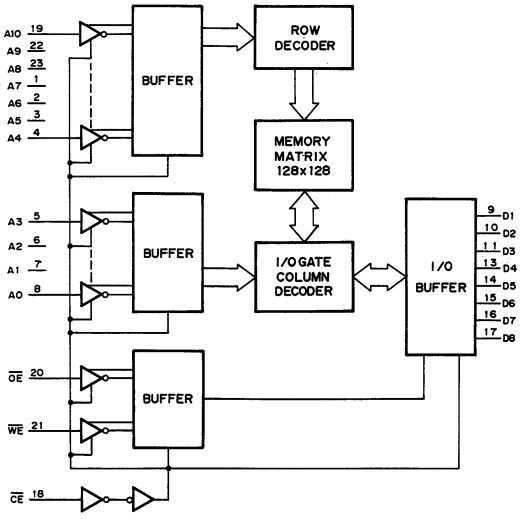

SN74LS221NS (TI) FLAT PACKAGE

TTL MONOSTABLE MULTIVIBRATOR WITH SCHMITT TRIGGER INPUT

– TOP VIEW –

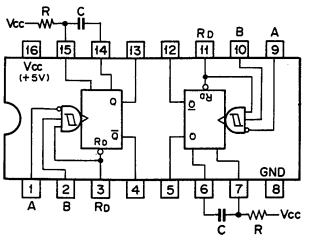

INPUTS			OUTPUTS	
RD	A	B	Q	$\overline{Q}$
0	X	X	0	1
X	1	X	0	1
X	X	0	0	1
1	0	↑	⊓	⊔
1	↓	1	⊓	⊔
↑	0	1	⊓	⊔

0;LOW LEVEL
1;HIGH LEVEL
X;DON'T CARE

OUTPUT PULSE WIDTH = 0.7CR

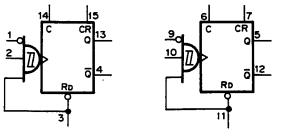

TA7267P (TOSHIBA)

DC MOTOR DRIVER

– PRINTED SIDE VIEW –

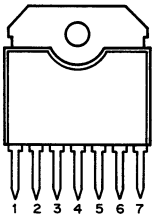

INPUTS		OUTPUTS		MODE
1	2	1	2	
1	1	0	0	BRAKE
0	1	0	1	ROTATION/ REV. ROTATION
1	0	1	0	REV. ROTATION / ROTATION
0	0	HI-Z		STOP

0 ; LOW LEVEL
1 ; HIGH LEVEL
HI-Z ; HIGH IMPEDANCE

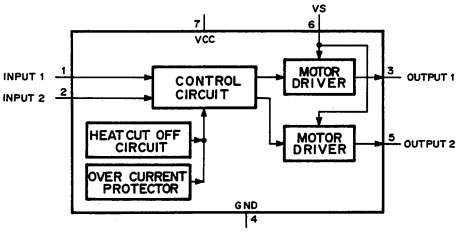

TC74HC221AF (TOSHIBA) FLAT PACKAGE

C-MOS MONOSTABLE MULTIVIBRATOR WITH SCHMITT TRIGGER INPUT

– TOP VIEW –

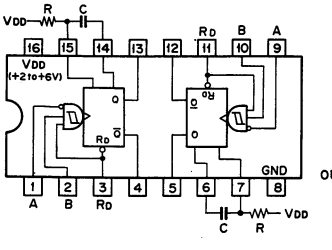

INPUTS			OUTPUTS	
RD	A	B	Q	$\overline{Q}$
0	X	X	0	1
X	1	X	0	1
X	X	0	0	1
1	0	↑	⊓	⊔
1	↓	1	⊓	⊔
↑	0	1	⊓	⊔

0;LOW LEVEL
1;HIGH LEVEL
X;DON'T CARE

OUTPUT PULSE WIDTH = 0.7CR

TC5081AP (TOSHIBA)

C-MOS PHASE COMPARATOR
– SIDE VIEW –

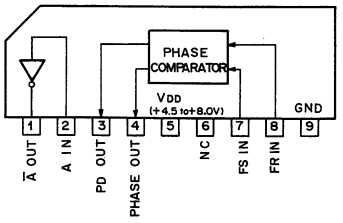

PHASE COMPARATOR TIMING CHART

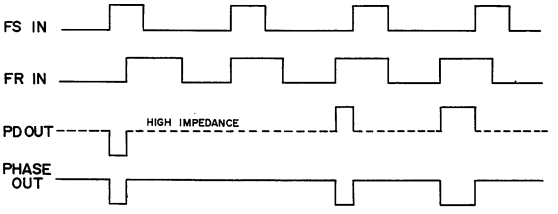

TC74HC123AF (TOSHIBA) FLAT PACKAGE

C-MOS DUAL RETRIGGERABLE MONOSTABLE MULTIVIBRATORS
– TOP VIEW –

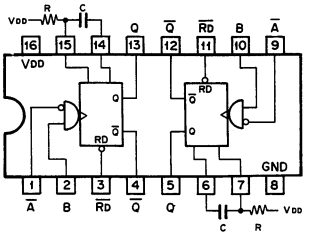

INPUT			OUTPUT	
RD	A	B	Q	$\overline{Q}$
0	X	X	0	1
1	1	X	0	1
1	X	0	0	1
1	0	↑	⊓	⊔
1	↓	1	⊓	⊔
↓	0	1	⊓	⊔

0 ; LOW LEVEL
1 ; HIGH LEVEL
X ; DON'T CARE

OUTPUT PULSE WIDTH = 0.46CR

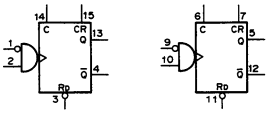

NOTE :

TYPE	VDD
TC74HCT123AF	+5V
OTHER TYPES	+2 to +6V

TC7S08F (TOSHIBA) CHIP PACKAGE

C-MOS 2-INPUT AND GATE

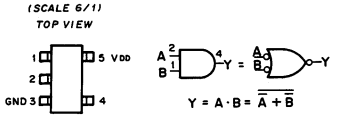

A	B	Y
0	0	0
0	1	0
1	0	0
1	1	1

0; LOW LEVEL
1; HIGH LEVEL

TYPE	VDD
7S08F 7S08FU	+2 to +6V
4S81F 14S81F	+3 to +18V

TC74HC191AF (TOSHIBA) FLAT PACKAGE

C-MOS PRESETTABLE SYNCHRONOUS 4-BIT BINARY UP/DOWN COUNTER
– TOP VIEW –

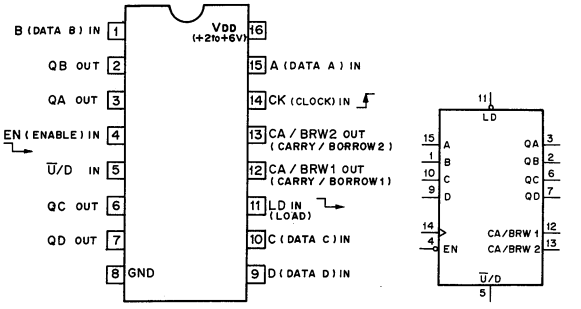

MODE SELECTION

CONTROL INPUTS			MODE
LD	EN	$\overline{U}$/D	
0	X	X	PRESET (ASYNCHRONOUS)
1	1	X	NO COUNT
1	0	0	UP COUNT
1	0	1	DOWN COUNT

0 ; LOW LEVEL
1 ; HIGH LEVEL
X ; DON'T CARE.

COUNT SEQUENCE

COUNT	OUTPUTS			
	QD	QC	QB	QA
0	0	0	0	0
1	0	0	0	1
2	0	0	1	0
3	0	0	1	1
4	0	1	0	0
5	0	1	0	1
6	0	1	1	0
7	0	1	1	1
8	1	0	0	0
9	1	0	0	1
10	1	0	1	0
11	1	0	1	1
12	1	1	0	0
13	1	1	0	1
14	1	1	1	0
15	1	1	1	1

UP COUNT
DOWN COUNT

CA/BRW OUTPUTS

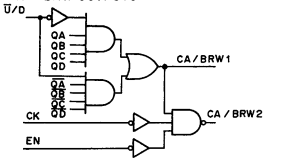

CA/BRW1 OUTPUT IS HIGH WHEN COUNT IS "15" AT UP-COUNT OR WHEN COUNT IS "0" AT DOWN COUNT.

CA/BRW2 OUTPUT IS LOW WHEN BOTH THE CLOCK AND EN INPUTS ARE LOW AND CA/BRW1 OUTPUT IS HIGH.

TL062CPS (TI) FLAT PACKAGE
TL082CPS (TI) FLAT PACKAGE

OPERATIONAL AMPLIFIER
(JFET INPUT)
– TOP VIEW –

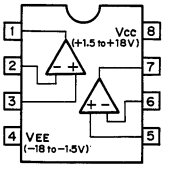

TL084CNS (TI) FLAT PACKAGE

OPERATIONAL AMPLIFIER
(J FET-INPUT)
– TOP VIEW –

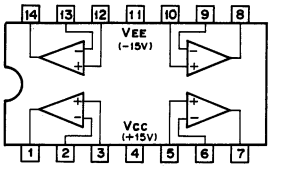

TL431CLP (TI)

ADJUSTABLE PRECISION SHUNT REGULATOR

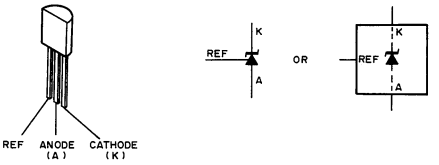

UPC78L05T (NEC) + 5V

POSITIVE VOLTAGE REGULATOR (100mA)

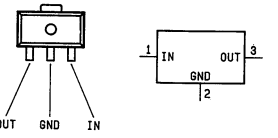

UPC324G2 (NEC) FLAT PACKAGE

QUAD OPERATIOAL AMPLIFIERS

– TOP VIEW –

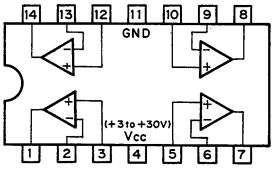

UPD42101C-3 (NEC)

UPD42101G-3 (NEC) FLAT PACKAGE

C-MOS 7K (910x8)-BIT FIFO MEMORY

– TOP VIEW –

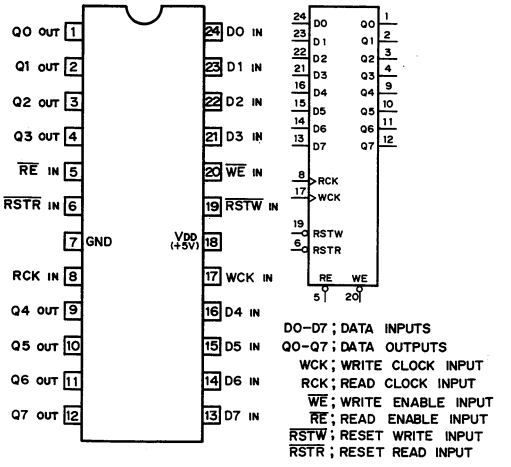

DO–D7 ; DATA INPUTS
QO–Q7 ; DATA OUTPUTS
WCK ; WRITE CLOCK INPUT
RCK ; READ CLOCK INPUT
$\overline{WE}$; WRITE ENABLE INPUT
$\overline{RE}$; READ ENABLE INPUT
$\overline{RSTW}$; RESET WRITE INPUT
$\overline{RSTR}$; RESET READ INPUT

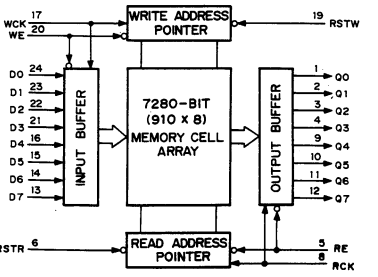

UPC4557C (NEC)

UPC4558G2 (NEC) FLAT PACKAGE

OPERATIONAL AMPLIFIER (WIDE BAND, LOW NOISE)

– TOP VIEW –

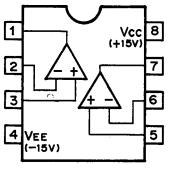

UPC4570C (NEC)

UPC4570G2 (NEC) FLAT PACKAGE

OPERATIONAL AMPLIFIER

– TOP VIEW –

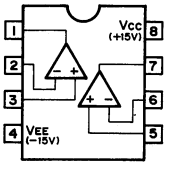

UPC4574G2 (NEC)

QUAD OPERATIONAL AMPLIFIER

– TOP VIEW –

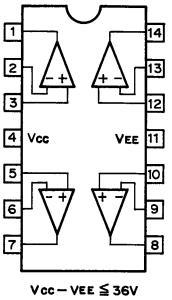

Vcc – VEE ≦ 36V

UPD6453GT (NEC) FLAT PACKAGE

C-MOS ON-SCREEN CHARACTER DISPLAY
– TOP VIEW –

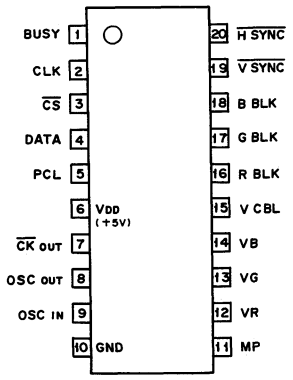

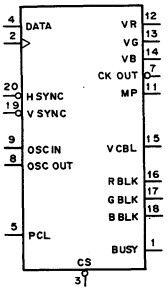

INPUT

CLK	; CLOCK
$\overline{CS}$	; CHIP SELECT
DATA	; SERIAL DATA
$\overline{H\ SYNC}$	; HORIZONTAL SYNC
OSC IN	; OSCILLATOR IN
PCL	; POWER ON CLEAR
$\overline{V\ SYNC}$	; VERTICAL SYNC

OUTPUT

B_{BLK}, R_{BLK}, G_{BLK}	; B, R, G, BLANKING
BUSY	; BUSY OUT
$\overline{CK}$ OUT	; CLOCK
MP	; MASK PULSE
OSC OUT	; OSCILLATOR OUT
V_R, V_G, V_B	; R, G, B, CHARACTER DATA
V_{CBL}	; VIDEO CUT BLANKING

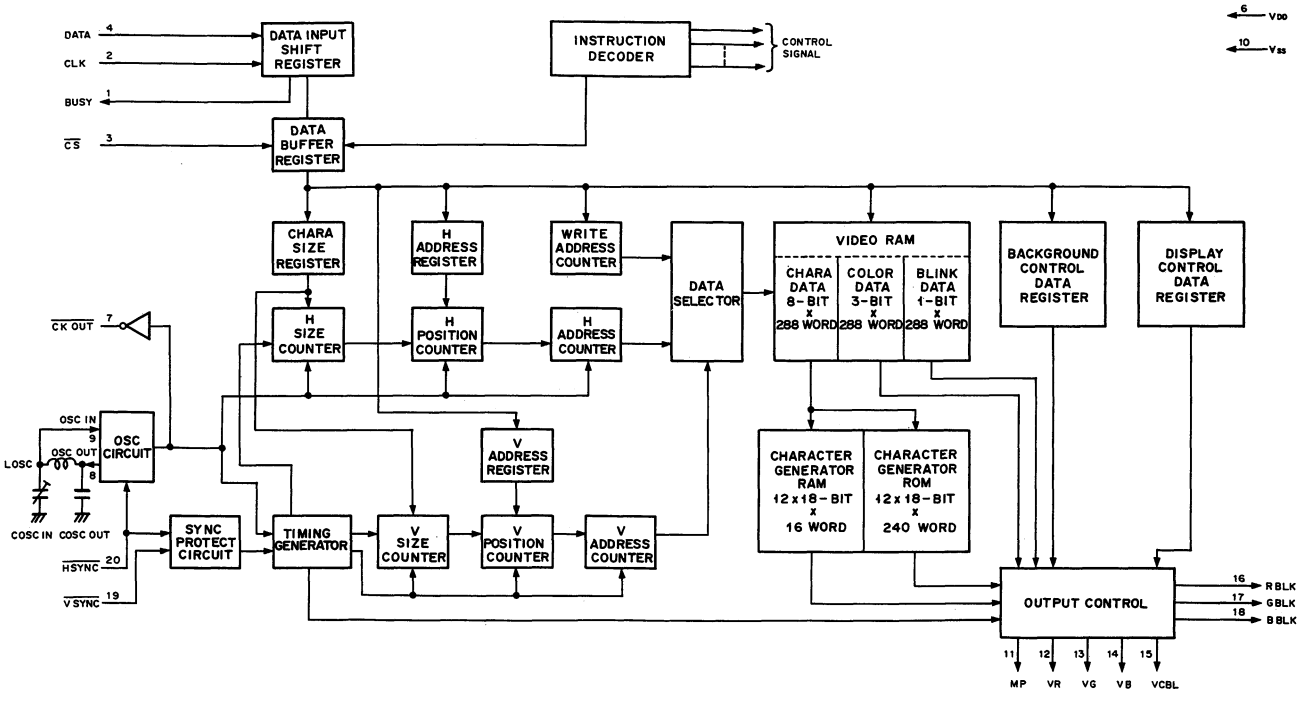

UPD75028GC (NEC)

C-MOS 4-BIT 1-CHIP MICROCOMPUTER
– TOP VIEW –

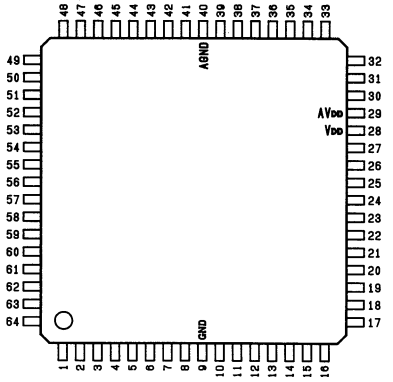

PIN NO.	I/O	SYMBOL	PIN NO.	I/O	SYMBOL	PIN NO.	I/O	SYMBOL	PIN NO.	I/O	SYMBOL
1	I/O	P43	17	I/O	PTO0/P20	33	I	AN6	49	I/O	P83
2	I/O	P42	18	I/O	MAT/P103	34	I	AN5	50	I/O	P82
3	I/O	P41	19	I/O	MAZ/P102	35	I	AN4	51	I/O	P81
4	I/O	P40	20	I/O	MAI/P101	36	I	AN3/P113	52	I/O	P80
5	I/O	P33	21	I/O	MAR/P100	37	I	AN2/P112	53	I/O	P73/KR7
6	I/O	P32	22	I	RESET	38	I	AN1/P111	54	I/O	P72/KR6
7	I/O	P31	23	I	X1	39	I	AN0/P110	55	I/O	P71/KR5
8	I/O	P30	24	–	X2	40	I	A GND	56	I/O	P70/KR4
9	–	GND	25	–	IC	41	I	TI0/P13	57	I/O	P63/KR3
10	I/O	SB1/SI/P03	26	I	XT1	42	I	P12/INT2	58	I/O	P62/KR2
11	I/O	SB0/SO	27	I/O	XT2	43	I	P11/INT1	59	I/O	P61/KR1
12	I/O	SCK/P01	28	–	VDD	44	I	P10/INT0	60	I/O	P60/KR0
13	I	INT4/P00	29	–	AVDD	45	I/O	P93	61	I/O	P53
14	I/O	BUZ/P23	30	–	AVREF +	46	I/O	P92	62	I/O	P52
15	I/O	PCL/P22	31	–	AVREF -	47	I/O	P91	63	I/O	P51
16	I/O	PPO/P21	32	I	AN7	48	I/O	P90	64	I/O	P50

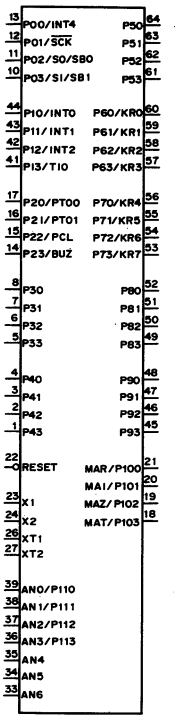

INPUT

AN0 – AN7	; ANALOG 0 – 7
AVREF (+)	; ANALOG REFERENCE (+)
AVREF (–)	; ANALOG REFERENCE (–)
INT 0, 1, 4	; EXTEMAL VECTORED INTERRUPT 0, 1, 4
INT2	; EXTEMAL TEST 2
KR0 – KR7	; KEY RETUM 0 – 7
MAT	; EXTEMAL COMPARATE TIMING (MFT A/D MODE)
P00 – P03	; PORT 0
P10 – P13	; PORT 1
P20 – P23	; PORT 2
P30 – P33	; PORT 3
P40 – P43	; PORT 4
P50 – P53	; PORT 5
P60 – P63	; PORT 6
P70 – P73	; PORT 7
P80 – P83	; PORT 8
P90 – P93	; PORT 9
P100 – P103	; PORT 10
P110 – P113	; PORT 11
RESET	; RESET
SI	; SIREAL
TI 0	; TIMER 0
X1, 2	; MAIN SYSTEM CLOCK OSCILLATION 1, 2
XT1, XT2	; SUB SYSTEM CLOCK OSCILLATION 1, 2

OUTPUT

BUZ	; BUZZER CLOCK
MAI	; INTEGRATION CONTROL (MFT A/D MODE)
MAR	; REFERENCE INTEGRATION CONTROL (MFT A/D MODE)
MAZ	; AUTOZERO CONTROL (MFT A/D MODE)
PCL	; PROGRAMMABLE CLOCK
PPO	; PROGRAMMABLE PULSE (MFT TIMER MODE)
PTO0	; PROGRAMMABLE TIMER 0
SB 0, 1	; SERIAL BUS 0.1
SO	; SERIAL

INPUT/OUTPUT

SCK	; SERIAL CLOCK

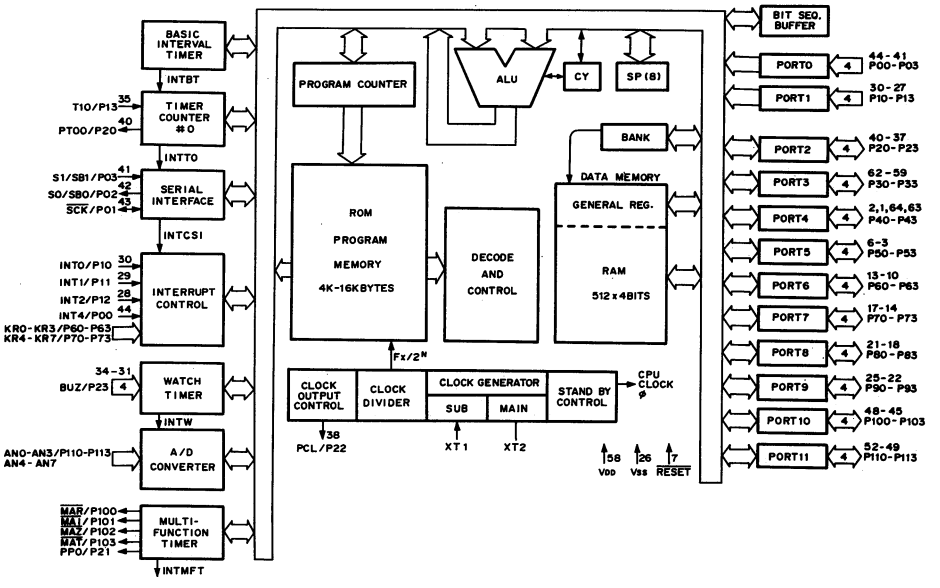

UPD75048CW (NEC)

C-MOS 4-BIT 1-CHIP MICROCOMPUTER
– TOP VIEW –

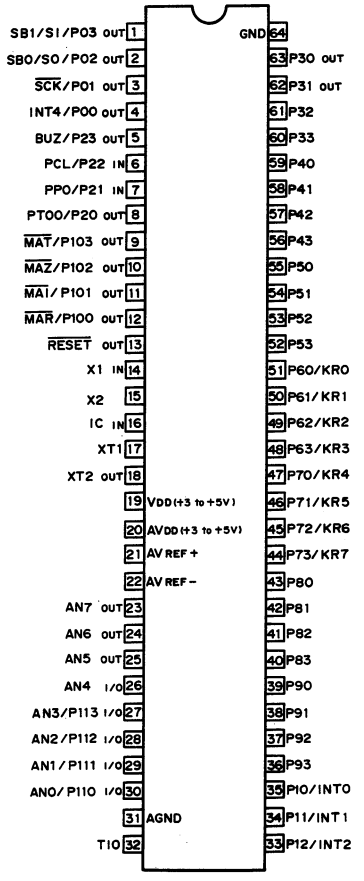

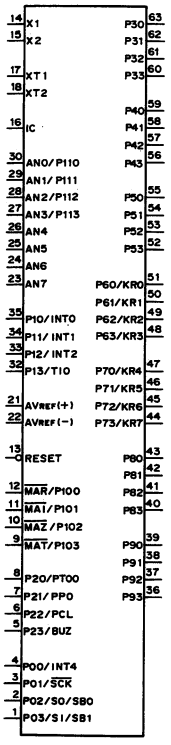

INPUT

AN0 – AN7	; ANALOG 0 – 7
AVREF (+)	; ANALOG REFERENCE (+)
AVREF (–)	; ANALOG REFERENCE (–)
INT 0, 1, 4	; EXTEMAL VECTORED INTERRUPT 0, 1, 4
INT2	; EXTEMAL TEST 2
KR0 – KR7	; KEY RETUM 0 – 7
MAT	; EXTEMAL COMPARATE TIMING (MFT A/D MODE)
P00 – P03	; PORT 0
P10 – P13	; PORT 1
P20 – P23	; PORT 2
P30 – P33	; PORT 3
P40 – P43	; PORT 4
P50 – P53	; PORT 5
P60 – P63	; PORT 6
P70 – P73	; PORT 7
P80 – P83	; PORT 8
P90 – P93	; PORT 9
P100 – P103	; PORT 10
P110 – P113	; PORT 11
RESET	; RESET
SI	; SIREAL
TI 0	; TIMER 0
X1, 2	; MAIN SYSTEM CLOCK OSCILLATION 1, 2
XT1, XT2	; SUB SYSTEM CLOCK OSCILLATION 1, 2

OUTPUT

BUZ	; BUZZER CLOCK
MAI	; INTEGRATION CONTROL (MFT A/D MODE)
MAR	; REFERENCE INTEGRATION CONTROL (MFT A/D MODE)
MAZ	; AUTOZERO CONTROL (MFT A/D MODE)
PCL	; PROGRAMMABLE CLOCK
PPO	; PROGRAMMABLE PULSE (MFT TIMER MODE)
PTO0	; PROGRAMMABLE TIMER 0
SB 0, 1	; SERIAL BUS 0.1
SO	; SERIAL

INPUT/OUTPUT

SCK	; SERIAL CLOCK

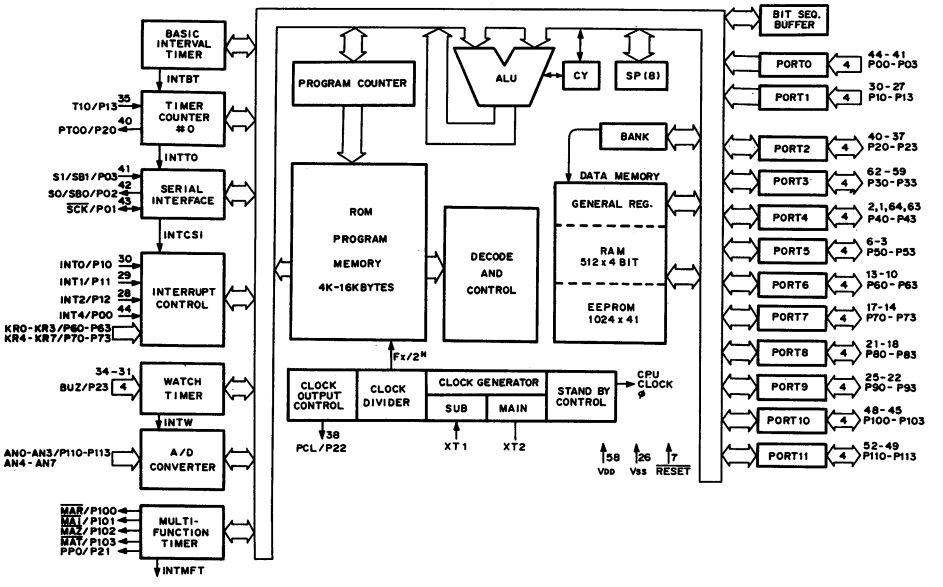

UPD70320GJ-8-5BG (NEC)

C-MOS SINGLE CHIP 16/8-BIT MICROCOMPUTER

– TOP VIEW –

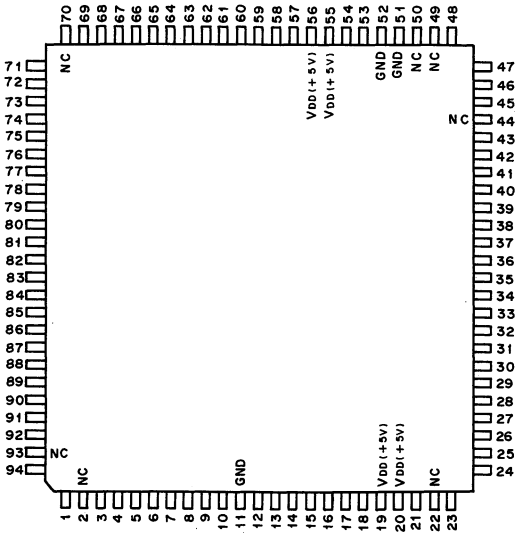

(VDD = + 5V)

PIN No.	I/O	SYMBOL	PIN No.	I/O	SYMBOL	PIN No.	I/O	SYMBOL
1	O	A12	33	I/O	P13/INTP2/INTAK	65	I/O	P01
2	–	NC	34	I/O	P14/INT/POLL	66	I/O	P02
3	O	A13	35	I/O	P15/TOUT	67	I/O	P03
4	O	A14	36	I/O	P16/SCK0	68	I/O	P04
5	O	A15	37	I/O	P17/READY	69	–	INT.CONNECT
6	O	A16	38	I	PT0	70	–	NC
7	O	A17	39	I	PT1	71	I/O	P05
8	O	A18	40	I	PT2	72	I/O	P06
9	O	A19	41	I	PT3	73	I/O	P07/CLKOUT
10	I	RxD0	42	I	PT4	74	I/O	D0
11	–	GND	43	I	PT5	75	I/O	D1
12	I/O	CTS0	44	–	NC	76	I/O	D2
13	O	TxD0	45	I	PT6	77	I/O	D3
14	I	RxD1	46	I	PT7	78	I/O	D4
15	I	CTS1	47	–	INT.CONNECT	79	I/O	D5
16	O	TxD1	48	–	VTH	80	I/O	D6
17	I/O	P20/DMARQ0	49	–	NC	81	I/O	D7
18	–	INT.CONNECT	50	–	NC	82	O	A0
19	–	VDD	51	–	GND	83	O	A1
20	–	VDD	52	–	GND	84	O	A2
21	I/O	P21/DMAAK0	53	–	X1	85	O	A3
22	–	NC	54	–	X2	86	O	A4
23	I/O	P22/TC0	55	–	VDD	87	O	A5
24	–	INT.CONNECT	56	–	VDD	88	O	A6
25	I/O	P23/DMARQ1	57	I	RESET	89	O	A7
26	I/O	P24/DMAAK1	58	O	REFRQ	90	O	A8
27	I/O	P25/TC1	59	O	R/W	91	O	A9
28	I/O	P26/HLDAK	60	O	MSTB	92	O	A10
29	I/O	P27/HLDRQ	61	O	IOSTB	93	–	NC
30	I	P10/NMI	62	O	MREQ	94	O	A11
31	I	P11/INTP0	63	I	EA			
32	I	P12/INTP1	64	I/O	P00			

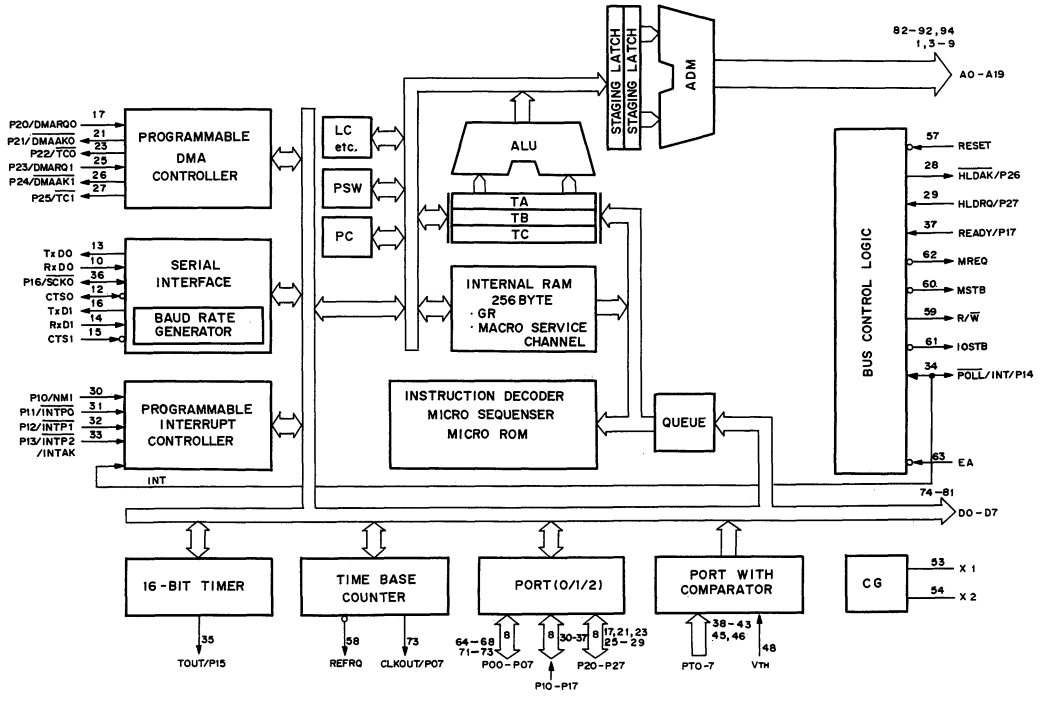

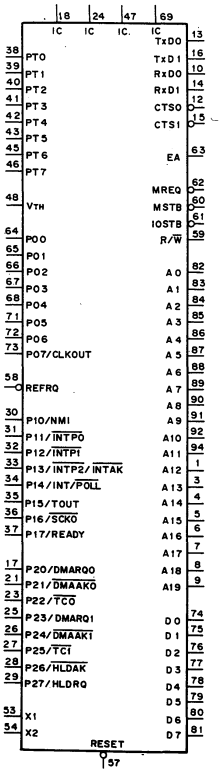

INPUT
DMARQ0 ; DMA REQUEST CH0, CH1 INPUTS
DMARQ1
EA ; ROM-LESS MODE SET INPUT
HLDRQ ; HOLD REQUEST INPUT
INTP0, INTP1 ; INTERRUPT REQUEST INPUTS
INTP2 ; INTERRUPT REQUEST INPUT
INT/POLL ; INTERRUPT REQUEST INPUT
NMI ; NON-MASKABLE INTERRUPT INPUT
PT0 – PT7 ; PORT 0 INPUTS
READY ; READY INPUT
RESET ; RESET INPUT
RXD0, RXD1 ; SERIAL DATA INPUTS
VTH ; REF. V FOR COMPARATOR INPUT
X1, X2 ; CRYSTAL 1, 2

OUTPUT
A0 – A19 ; ADDRESS BUS OUTPUTS
CLKOUT ; SYSTEM CLOCK OUTPUT
DMAAK0 ; DMA ACKNOWLEDGE CH0, CH1 OUTPUTS
DMAAK1 ; HOLD ACKNOWLEDGE OUTPUT
HLDAK
INTAK ; INTERRUPT ACKNOWLEDGE OUTPUT
IOSTB ; I/O READ/WRITE STROBE OUTPUT
MREQ ; MEMORY REQUEST OUTPUT
MSTB ; MEMORY READ/WRITE STROBE OUTPUT
REFRQ ; REFRESH REQUEST OUTPUT
R/W ; READ AND WRITE CYCLE OUTPUT
SCKO ; SERIAL CLOCK OUTPUT
TC0, TC1 ; DMA (CH0/CH1) ENDING OUTPUTS
TOUT ; TIMER OUTPUT
TXD0, TXD1 ; SERIAL DATA OUTPUTS

INPUT/OUTPUT
CTS0, CTS1 ; CLEAR TO SEND INPUT/OUTPUT
D0 – D7 ; DATA BUS INPUTS/OUTPUTS
P00 – P07 ; PORT 0 INPUTS/OUTPUTS
P10 – P17 ; PORT 1 INPUTS/OUTPUTS
P20 – P27 ; PORT 2 INPUTS/OUTPUTS

CXA1727Q (SONY)

ID ADDER/DETECTOR FOR WIDE TV SIGNAL
– TOP VIEW –

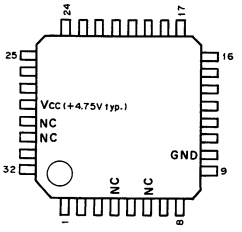

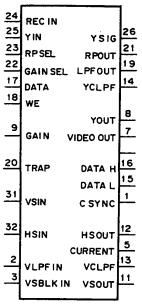

(Vcc = + 4.75V typ.)

PIN No.	I/O	SIGNAL	PIN No.	I/O	SIGNAL
1	O	CSYNC	17	I	DATA
2	I	VLPFIN	18	I	WE
3	I	VSBLKIN	19	O	LPFOUT
4	–	NC	20	I	TRAP
5	O	CURRENT	21	O	RPOUT
6	–	NC	22	I	GAINSEL
7	O	VIDEOOUT	23	I	RPSEL
8	O	YOUT	24	I	RECIN
9	I	GAIN	25	I	YIN
10	–	GND	26	O	YSIG
11	O	VSOUT	27	I	VIDEOIN
12	O	HSOUT	28	–	Vcc
13	O	VCLPF	29	–	NC
14	O	YCLPF	30	–	NC
15	O	DATAL	31	I	VSIN
16	O	DATAH	32	I	HSIN

INPUT
DATA ; ID DATA
GAIN ; VIDEO/Y OUT AMP GAIN SELECT
GAINSEL ; Y AMP GAIN SELECT
HSIN ; H SYNC SEP.
RECIN ; REC Y
RPSEL ; Y R/P SELECT
TRAP ; TRAPPED Y
VIDEOIN ; VIDEO
VLPFIN ; LOW-PASSED CSYNC
VSBLKIN ; LOW-PASSED CSYNC
VSIN ; V SYNC SEP.
WE ; ID WRITE ENABLE
YIN ; PB Y

OUTPUT
CSYNC ; COMPOSITE SYNC
DATAH ; Y LEVEL HIGH
DATAL ; Y LEVEL LOW
HSOUT ; H SYNC
LPFOUT ; LOW-PASSED Y
RPOUT ; R/P Y
VIDEOOUT ; VIDEO
VSOUT ; V SYNC
YOUT ; Y MAIN
YSIG ; R/P SELECTED Y

OTHER
CURRENT ; REF CURRENT RESISTOR
VCLPF ; CAPACITOR FOR VIDEO CLAMP
YCLPF ; CAPACITOR FOR Y CLAMP

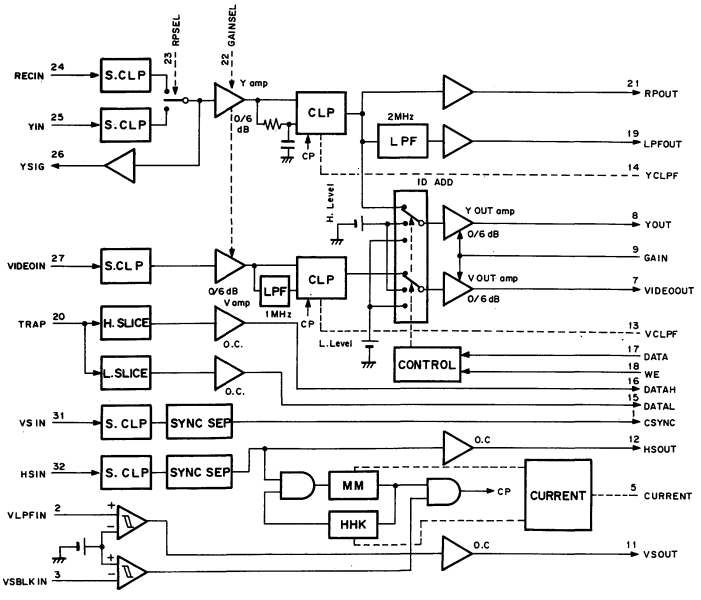

CXD101-106Q (SONY)

C-MOS DIGITAL DELAY LINE
– TOP VIEW –

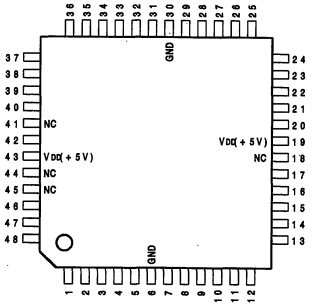

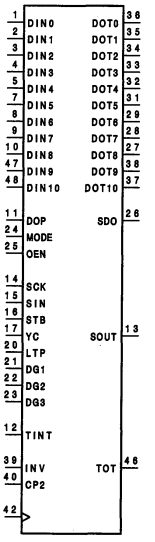

INPUT
CLK ;CLOCK INPUT
DIN0-DIN10;DATA INPUT
DOP ;DO PULSE INPUT
MODE ;H:14CK DELAY
L:5CK DELAY
OEN ;OUTPUT ENABLE
(L:DOT0-10 OUTPUT STATUS
H:HIGH IMPEDANCE STATUS)
TINT ;H:MPU COMMUNICATION MODE
SCK ;MPU SERIAL I/F CLOCK
SIN ;MPU SERIAL DATA IN
STB ;MPU SERIAL I/F STROBE
YC ;L:CHROMA,H:Y
DG1-DG3 ;FOR DIAG INPUT
LTP ;FOR DIAG INPUT
CP2 ;TEST TERMINAL GENERALLY USE:L
INV ;TEST TERMINAL GENERALLY USE:L
OUTPUT
DOT0-DOT10;DATA OUTPUT
SDO ;STRETCHED DO OUTPUT
SOUT ;DATA OUT TO MPU
TOT ;TEST OUTPUT

(VDD = +5V)

PIN No.	I/O	SIGNAL	PIN No.	I/O	SIGNAL	PIN No.	I/O	SIGNAL	PIN No.	I/O	SIGNAL
1	I	DIN0	13	O	SOUT	25	I	OEN	37	O	DOT10
2	I	DIN1	14	I	SCK	26	O	SDO	38	O	DOT9
3	I	DIN2	15	I	SIN	27	O	DOT8	39	I	INV
4	I	DIN3	16	I	STB	28	O	DOT7	40	I	CP2
5	I	DIN4	17	I	YC	29	O	DOT6	41	–	NC
6	–	GND	18	–	NC	30	–	GND	42	I	CLK
7	I	DIN5	19	–	VDD	31	O	DOT5	43	–	VDD
8	I	DIN6	20	I	LTP	32	O	DOT4	44	–	NC
9	I	DIN7	21	I	DG1	33	O	DOT3	45	–	NC
10	I	DIN8	22	I	DG2	34	O	DOT2	46	O	TOT
11	I	DOP	23	I	DG3	35	O	DOT1	47	I	DIN9
12	I	TINT	24	I	MODE	36	O	DOT0	48	I	DIN10

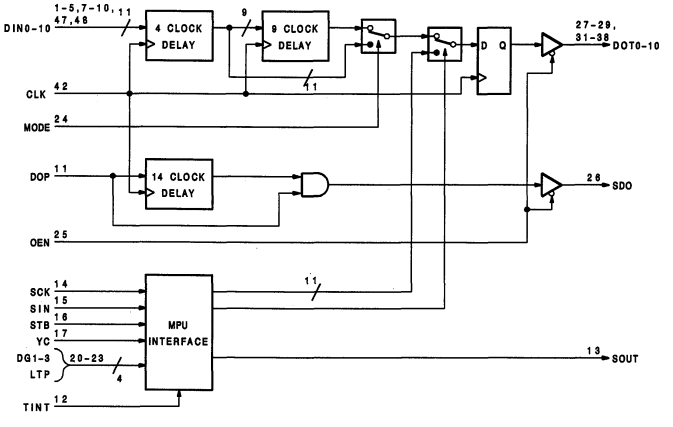

CXD1217M (SONY) FLAT PACKAGE

C-MOS SYNC GENERATOR
– TOP VIEW –

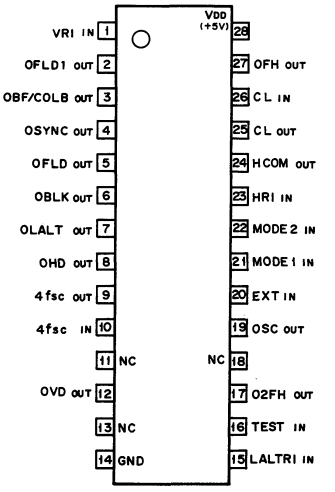

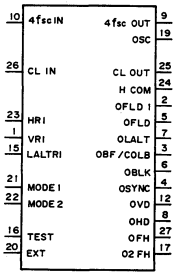

SYSTEM	4fsc	CLOCK
NTSC	910fH	910fH
PAL	1135fH+2fV	908fH
PALM	909fH	910fH
SECAM	—	908fH

INPUT		SYSTEM
MODE1	MODE2	
0	0	NTSC
0	1	SECAM
1	0	PALM
1	1	PAL

0 ; LOW LEVEL
1 ; HIGH LEVEL

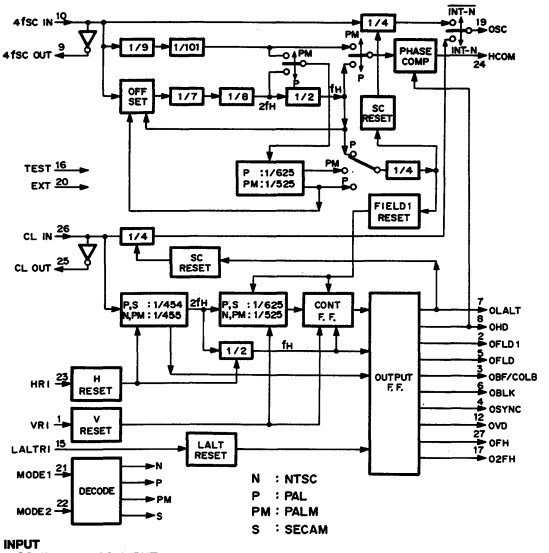

N : NTSC
P : PAL
PM : PALM
S : SECAM

INPUT
4fSC IN ; 4fSC INPUT
CL IN ; CLOCK INPUT
EXT ; SYNC MODE SELECT
(L ; INTERNAL/H ; EXTERNAL)
HRI ; H RESET
LALTRI ; LINE CHANGE RESET
MODE 1,2 ; SYSTEM SELECT
VRI ; V RESET

OUT PUT
4fSC OUT ; 4fSC OUTPUT
CL OUT ; CLOCK OUTPUT
HCOM ; PHASE COMPARATOR
O2fH ; 2fH OUTPUT
OBF/COLB ; BURST FLAG/COLOR BLANKING
OBLK ; COMPOSITE BLANKING
OFH ; H FREQUENCE
OFLD ; EVEN, ODD
OFLD1 ; FIELD1
OHD ; H DRIVE
OLALT ; LINE CHANGE
OSC ; SUBCARRIER
OSYNC ; COMPOSITE SYNC
OVD ; V DRIVE

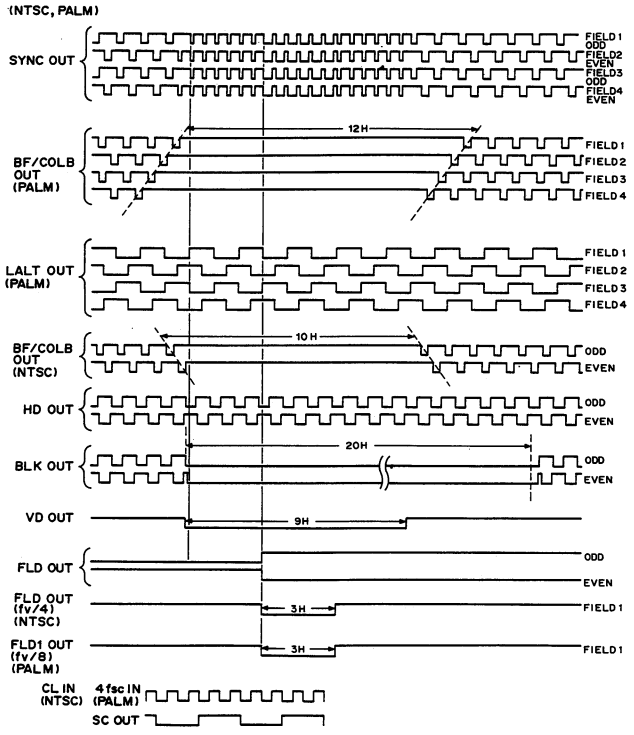

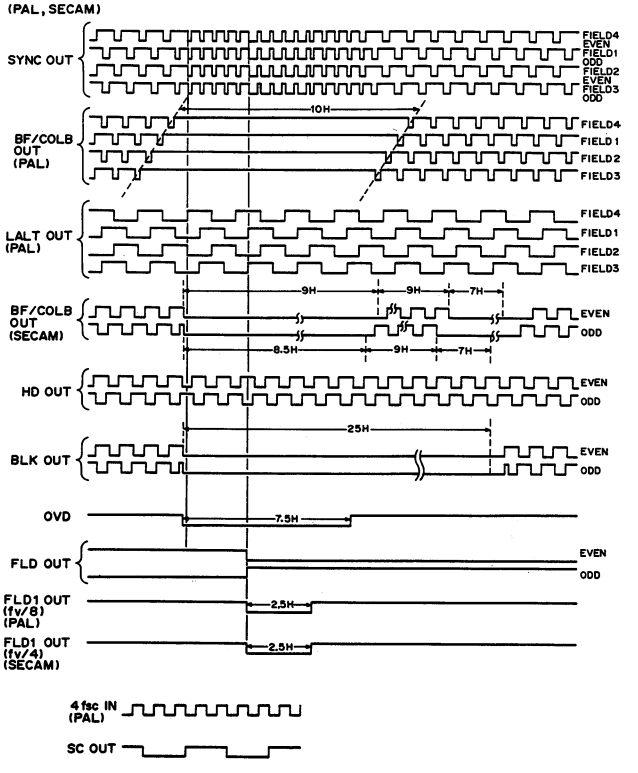

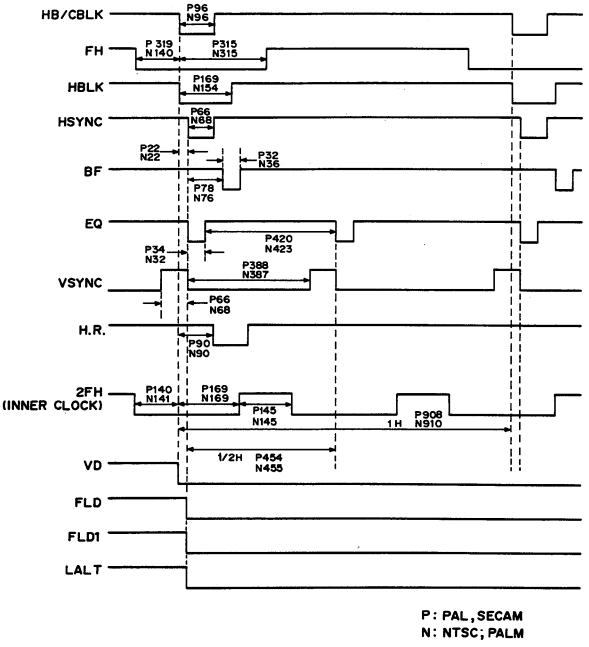

MC1488M (MOTOROLA) FLAT PACKAGE

2-INPUT (1-INPUT) POSITIVE-NAND LINE DRIVER

– TOP VIEW –

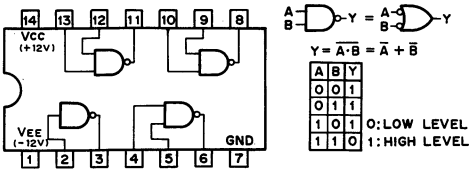

MC1489AM (MOTOROLA) FLAT PACKAGE

QUADRUPLE LINE RECEIVER

– TOP VIEW –

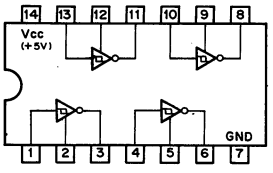

INPUT THRESHOLD SHIFTING

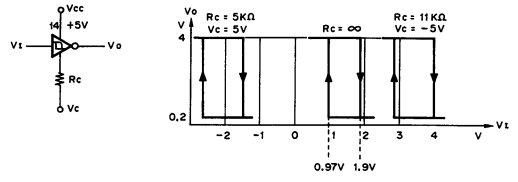

INPUT NOISE FILTERING

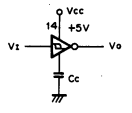

SN74HC273ANS (TI) FLAT PACKAGE

C-MOS OCTAL D-TYPE FLIP-FLOPS WITH RESET
– TOP VIEW –

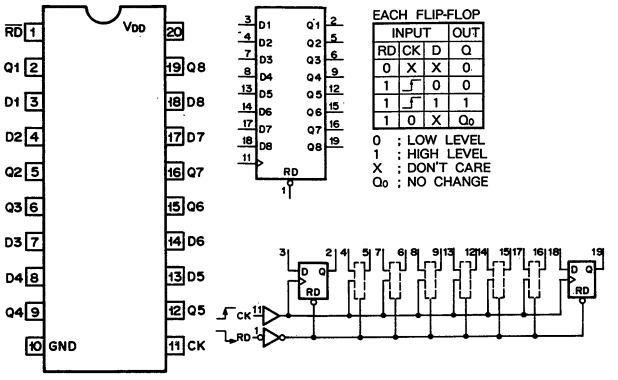

EACH FLIP-FLOP

INPUT			OUT
RD	CK	D	Q
0	X	X	0
1	↑	0	0
1	↑	1	1
1	0	X	Q_0

0 ; LOW LEVEL
1 ; HIGH LEVEL
X ; DON'T CARE
Q_0 ; NO CHANGE

NOTE :

TYPE	VDD
AC HC	+2 to +6V
VHC	+2 to +5.5V

TC4W53F (TOSHIBA) FLAT PACKAGE

C-MOS 2-CHANNEL MULTIPLEXER/DEMULTIPLEXER
– TOP VIEW –

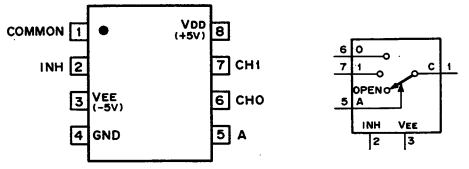

CONT. INPUT		ON CHANNEL
INH	A	
0	0	0
0	1	1
1	X	OPEN

0 ; LOW LEVEL
1 ; HIGH LEVEL
X ; DON'T CARE

CXD8384Q (FUJITSU)

C-MOS LTC READER/GENERATOR
-TOP VIEW-

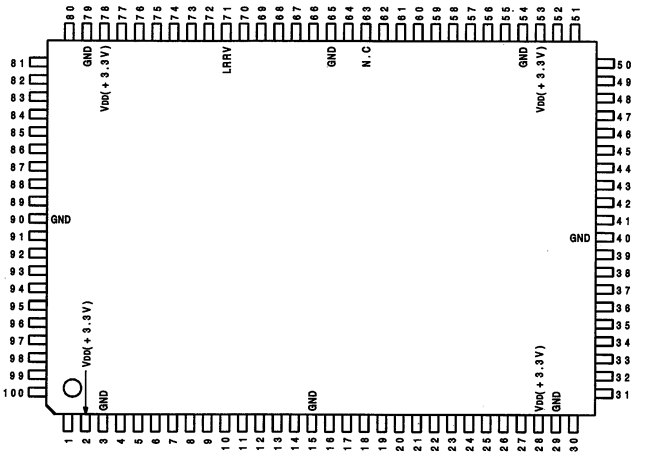

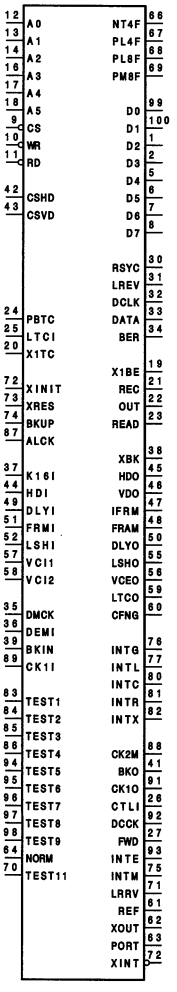

INPUT

A0-A5	;ADDRESS BUS IN
ALCK	;ARITHMETIC LOGIC UNIT CLOCK IN
BKIN	;BACKUP IN (NEGATIVE LOGIC)
BKUP	;BACKUP EXECUTION IN (NEGATIVE LOGIC)
CK1I	;SYSTEM CLOCK IN
CSHD	;COMPOSITE SYNC/HD IN
CSVD	;COMPOSITE SYNC/VD IN
CTLI	;CTL SIGNAL IN
DEMI	;LONGITUDINAL TIME AND CONTROL CODE IN
DLYI	;INPUT TO DELAY CIRCUIT
DMCK	;LTC DEMODULATE CLOCK IN
FRMI	;FRAME SIGNAL IN
FWD	;CTL DIRECTION SIGNAL IN
HDI	;HORIZONTAL SYNC INPUT
INTE	;EXTERNAL INTERRUPT IN (POSITIVE LOGIC)
K16I	;16KHz CLOCK IN
	BACKUP CLOCK IN
LRRV	;DIRECTION INPUT FOR LTC READER CALCULATION
LTCI	;GENERATED LTC IN
LSHI	;LTC SYNCHRINOUS H INPUT
NORM	;NORMAL/BACKUP MODE SELECT
TEST1-TEST9, TEST11	;TEST IN
PBTC	;PLAYBACK LTC IN
RD	;READ IN (NEGATIVE LOGIC)
VCI1	;LTC CLOCK IN-1
VCI2	;EXTERNAL LTC IN
X1TC	;LTC CLOCK IN-2
XRES	;SYSTEM RESET IN (NEGATIVE LOGIC)
WR	;WRITE IN (NEGATIVE LOGIC)

OUTPUT

BER	;BI-PHASE MARK ERROR(BIT ERROR)
BKO	;BACKUP CONTROL OUT-2 (POSITIVE LOGIC)
CFNG	;COLOR FRAME ERROR FLAG OUT
CK1O	;SYSTEM CLOCK OUT
CK2M	;CLOCK 2M OUT
CS	;CHIP SELECT IN (NEGATIVE LOGIC)
D0-D7	;DATA BUS
DATA	;DEMODULATED SERIAL DATA OUT
DCCK	;LTC DECODE CLOCK OUT
DCLK	;DEMODULATED CLOCK OUT
DLYO	;OUTPUT FROM DELAY CIRCUIT
FRAM	;FRAME SIGNAL OUT -2
HDO	;HORIZONTAL SYNC DRIVE OUT
IFRM	;FRAME SIGNAL OUT -1
INTC	;CTL INTERRUPT OUT (POSITIVE LOGIC)
INTG	;GENERATOR INTERRUPT OUT (POSITIVE LOGIC)
INTL	;READER INTERRUPT -1 OUT (POSITIVE LOGIC)
INTM	;INTERRUPT MIX OUT (POSITIVE LOGIC)
INTR	;READER INTERRUPT -2 OUT (POSITIVE LOGIC)
INTX	;EXTERNAL LTC INTERRUPT OUT (POSITIVE LOGIC)
LREV	;READ REV/FWD BIT OUT
LSHO	;LTC SYNCHRONOUS SIGNAL H OUT
LTCO	;LTC SIGNAL OUT
NT4F,PL4F, PL8F,PM8F	;DEMODULATED COLOR FRAME OUT
OUT	;EXTERNAL OUTPUT LTC OUT
PORT	;PORT
READ	;READ LTC OUT
REC	;RECORD LTC OUT
REF	;REFERENCE OF LTC GENERATOR
RSYC	;READ SYNC WORD DATA OUT
VCEO	;LTC CLOCK OUT
VDO	;VERTICAL SYNC DRIVE OUT
X1BE	;BI-PHASE MARK ERROR(NORMAL SPEED READER)
XBK	;BACKUP CONTROL OUT-1 (NEGATIVE LOGIC)
XINT	;INVERTED INTERRUPT MIX OUT (NEGATIVE LOGIC)
XOUT	;INVERTED EXTERNAL OUTPUT LTC OUT

(VDD = + 3.3V)

PIN No.	I/O	SIGNAL	PIN No.	I/O	SIGNAL	PIN No.	I/O	SIGNAL	PIN No.	I/O	SIGNAL
1	I/O	D2	26	I/O	CTLI	51	I/O	FRMI	76	O	INTG
2	I/O	D3	27	I/O	FWD	52	I/O	LSHI	77	O	INTL
3	–	VDD	28	–	VDD	53	–	VDD	78	–	VDD
4	–	GND	29	–	GND	54	–	GND	79	–	GND
5	I/O	D4	30	O	RSYC	55	O	LSHO	80	O	INTC
6	I/O	D5	31	O	LREV	56	O	VCEO	81	O	INTR
7	I/O	D6	32	O	DCLK	57	I/O	VCI1	82	O	INTX
8	I/O	D7	33	O	DATA	58	I/O	VCI2	83	I	TEST1
9	I	$\overline{CS}$	34	O	BER	59	O	LTCO	84	I	TEST2
10	I	$\overline{WR}$	35	I	DMCK	60	O	CFNG	85	I	TEST3
11	I	$\overline{RD}$	36	I/O	DEMI	61	I/O	REF	86	I	TEST4
12	I	A0	37	I/O	K16I	62	O	XOUT	87	I/O	ALCK
13	I	A1	38	O	XBK	63	O	PORT	88	O	CK2M
14	I	A2	39	I	BKIN	64	I	NORM	89	I	CK1I
15	–	GND	40	–	GND	65	–	GND	90	–	GND
16	I	A3	41	I/O	BKO	66	O	NT4F	91	I/O	CK1O
17	I	A4	42	I/O	CSHD	67	O	PL4F	92	O	DCCK
18	I	A5	43	I/O	CSVD	68	O	PL8F	93	I/O	INTE
19	O	X1BE	44	I/O	HDI	69	O	PM8F	94	I	TEST5
20	I/O	X1TC	45	O	HDO	70	I	TEST11	95	I	TEST6
21	O	REC	46	O	VDO	71	I/O	LRRV	96	I	TEST7
22	O	OUT	47	O	IFRM	72	O	$\overline{XINT}$	97	I	TEST8
23	O	READ	48	O	FRAM	73	I	XRES	98	I	TEST9
24	I/O	PBTC	49	I/O	DLYI	74	I	BKUP	99	I/O	D0
25	I/O	LTCI	50	O	DLYO	75	O	INTM	100	I/O	D1

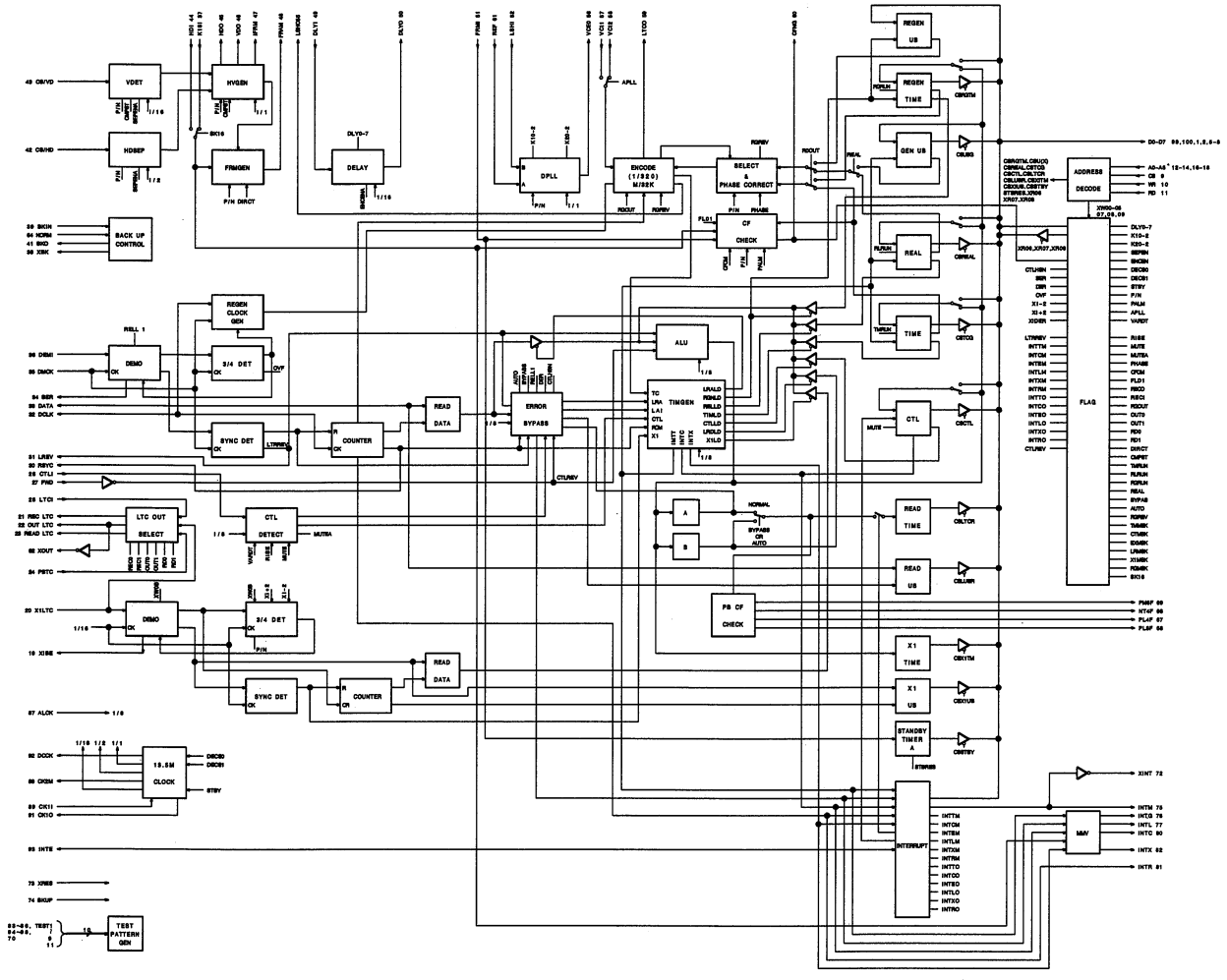

UPD42505C-50 (NEC)

C-MOS 5048x8-BIT FIFO MEMORY
– TOP VIEW –

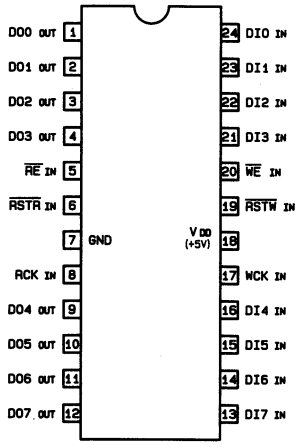

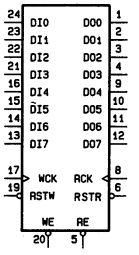

WCK; WRITE CLOCK INPUT
RCK; READ CLOCK INPUT
WE; WRITE ENABLE INPUT
RE; READ ENABLE INPUT
RSTW; WRITE RESET INPUT
RSTR; READ RESET INPUT
DI0–7; DATA INPUTS
DO0–7; DATA OUTPUTS

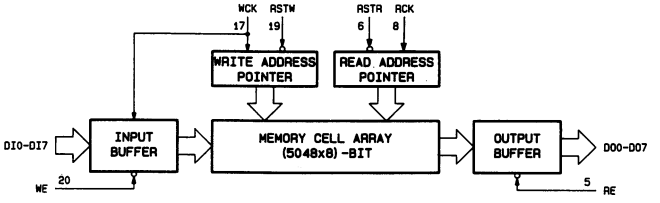

Section 18
Replaceable Parts and Optional Fixtures

18-1. NOTES ON REPAIR PARTS

(1) Safety Related Components Warning

Components marked with ⚠ on the schematic diagrams, exploded views and electrical spare parts list are critical to safe operation. Replace these components with Sony parts whose part numbers appear in this manual or in service bulletin and service manual supplements published by Sony.

(2) Standardization of Parts

Repair parts supplied from Sony Parts Center may not be always identical with the parts which actually in use due to "accommodating the improved parts and/or engineering changes" or "standardization of genuine parts".

This manual's exploded views and electrical spare parts list are indicating the part numbers of "the standardized genuine parts at present".

(3) Stock of Parts

Parts marked with "o" SP (Supply Code) column of the spare parts list are not normally required for routine service work. Orders for parts marked with "o" will be processed, but allow for additional delivery time.

(4) Units for Capacitors, Indictors and Resistors

The following units are assumed in schematic diagrams, electrical parts list and exploded views unless otherwise specified.

Capacitors : μF
Inductors : μH
Resistors : Ω

(5) Tension Spring

(××T) after a tension spring is shown on the parts list in order to indicate the number of spring turns required for the use.

(Example) TENSION, SPRING (20 T) :
This spring must be cut at its 20th turn for actual use.

18-1. 補修用部品注意事項

(1) 安全重要部品

回路図、分解図、電気部品表中、⚠印の部品は安全性を維持するために重要な部品です。従ってこれらの部品を交換するときには必ず指定の部品と交換して下さい。

(2) 部品の共通化

ソニーから供給される部品は、セットに実装されているものと異なることがあります。これは部品の共通化、改良等によるものです。

分解図や電気部品表には現時点での共通化された部品が記載されています。

(3) 部品の在庫

部品表のSP (Supply code) 欄に"o"で示される部品は交換頻度が低い部品ですので在庫していないことがあり、納期が長くなることがあります。

(4) コンデンサー、インダクター、抵抗の単位

回路図、分解図、電気部品表中、特に明記したものを除き、下記の単位は省略されています。

コンデンサー : μF
インダクター : μH
抵抗 : Ω

(5) 引張コイルバネ

部品表中の引張コイルバネの名称のあとの (××T) は、使用時の巻数を示しています。

(例) TENSION、SPRING (20 T)
巻数が20になるように切断し、使用する。

18-2. EXPLODED VIEWS

Index of Main Mechanical Parts/Components

Mark	Item	Title	Page
① ②	Reel Table Block (T) RS Table (T) Block	REEL CHASSIS (1)	18-4
③ ④ ⑤	Loarding Ring Block Gear Box Block Cleaning Roller Block	LOARDING RING	18-6
⑥ ⑦ ⑧ ⑨	MC Block Reel Table Block (S) RS Table (S) Block LS Motor Block	REEL CHASSIS (2)	18-8
⑩ ⑪ ⑫	Head Drum Tension Regulator Block Capstan Motor	DRUM & TENSION REGULATOR ASSEMBLY	18-10
⑬	DR-214 Board	DR-214 BOARD ASSEMBLY	18-12
⑭ ⑮ ⑯ ⑰ ⑱	AT Head (R) Block Pinch Press Block FE Head Block CTL Head Block T Sensor Block	PRESS ASSY, PINCH	18-14
⑲	Cassette Compartment	CASSETTE COMPARTMENT ASSEMBLY	18-16
⑳	Upper Lid Bottom Plate Cabinet (right) Cabinet (left)	CHASSIS & ORNAMENTAL PANEL BLOCK	18-18
㉑	Printed Circuit Boards	CARD RACK BLOCK (1)	18-20
㉒	Printed Circuit Boards	CARD RACK BLOCK (2)	18-22
㉓	SC Guide Block Indicator Tube Module, Fluoresce	CHASSIS BLOCK	18-24
㉔	Connector Panel	CONNECTOR PANEL BLOCK	18-26

MECHANICAL DECK

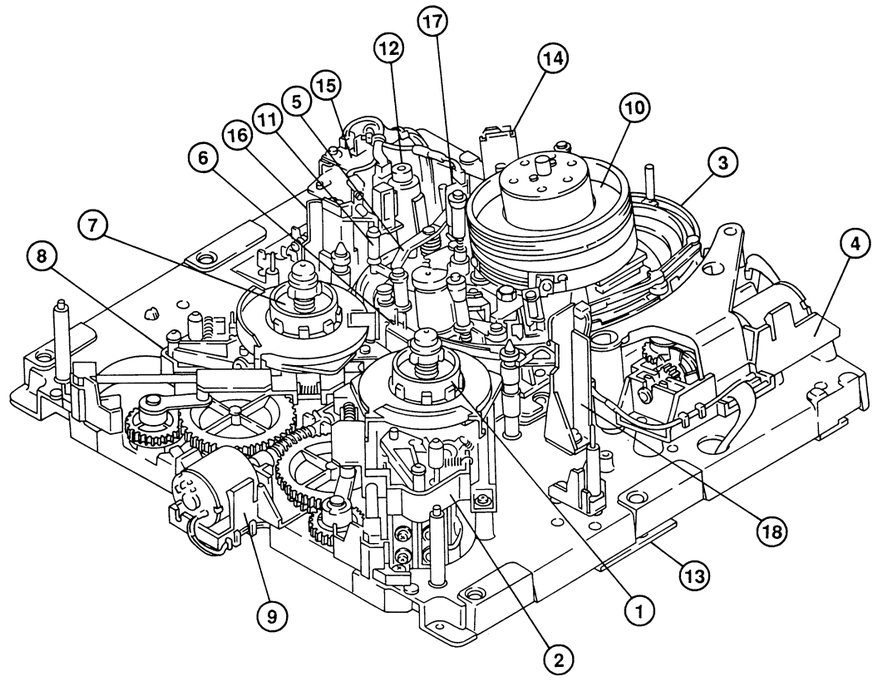

Exploded View

OVERALL BLOCK

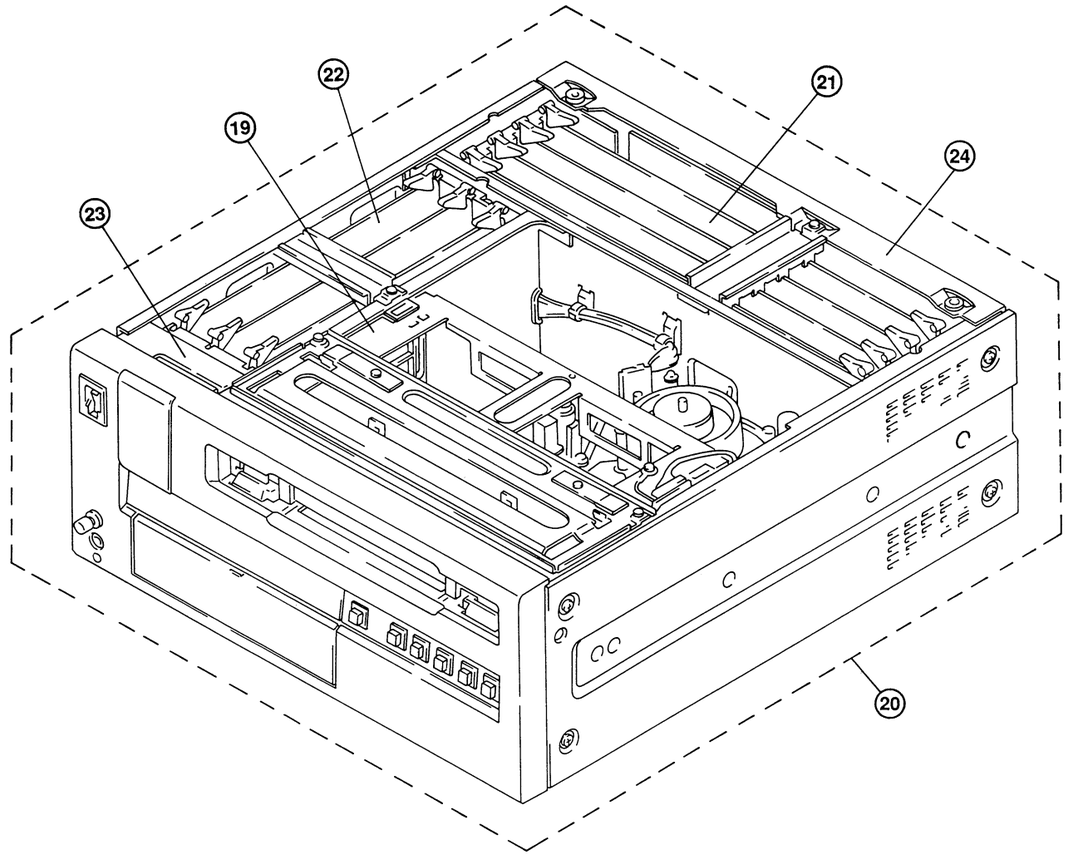

18-3

Reel Chassis (1)

REEL CHASSIS (1)

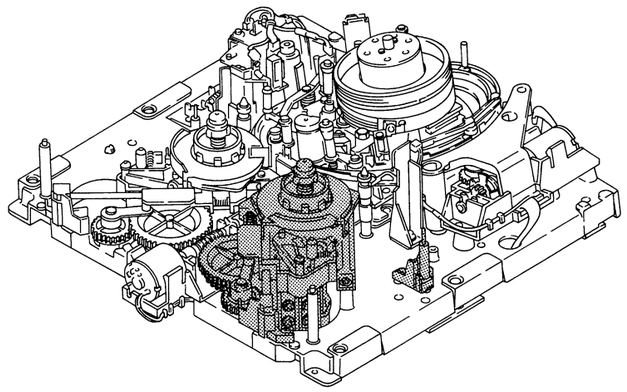

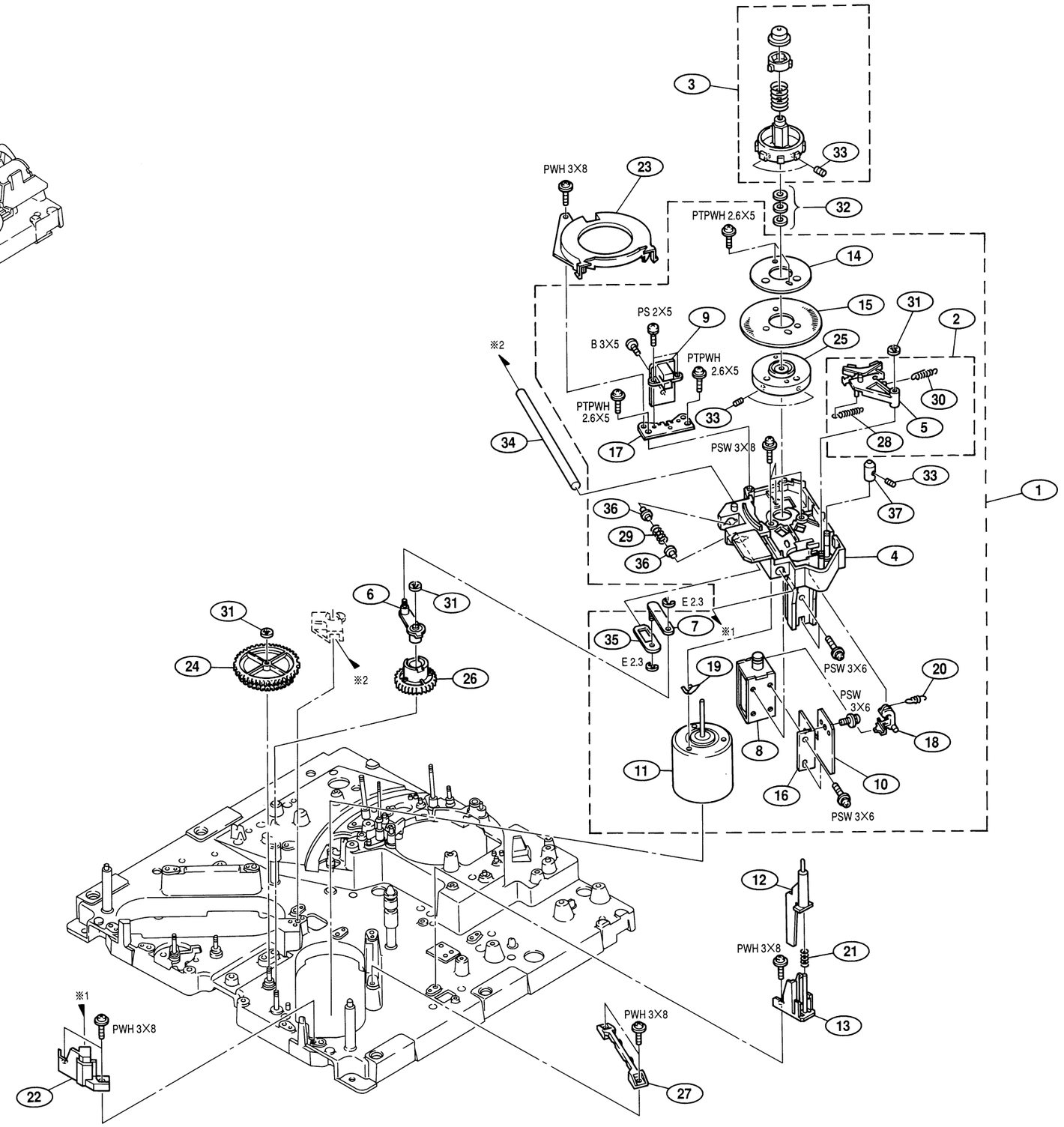

18-4

No.	Part No.	SP	Description
1	A-8323-772-A	s	TABLE (T) ASSY(RP), RS
2	A-8267-685-C	s	BRAKE ASSY
3	A-8267-690-B	s	TABLE ASSY, REEL
4	X-3167-230-3	o	PLATE (T) ASSY, REEL MOTOR
5	X-3167-231-3	s	LINING ASSY
6	X-3717-202-3	o	ARM ASSY, CRANK
7	X-3717-204-1	o	ARM (B) ASSY, CRANK
8	1-454-417-41	s	SOLENOID, PLUNGER
9	1-648-923-11	o	SE-207 BOARD
10	1-648-924-11	o	RM-126 BOARD
11	A-8323-773-A	s	MOTOR ASSY(RP), REEL
12	3-180-745-01	o	LEVER, MR **(UVW-1400/1400P)**
13	3-180-746-01	o	HOLDER, MR **(UVW-1400/1400P)**
14	3-182-279-02	o	RETAINER, DISK
15	3-182-280-02	o	DISK, REEL
16	3-182-281-01	o	SHEET METAL (T), RM FITTING
17	3-182-282-01	o	SHEET METAL, SENSOR FITTING
18	3-182-284-03	o	ARM, BRAKE RELEASE
19	3-182-285-01	s	SPACER (0.02T)
19	3-182-285-11	s	SPACER (0.05T)
20	3-182-286-01	s	SPRING, TENSION
21	3-182-295-01	o	SPRING, COMPRESSION **(UVW-1400/1400P)**
22	3-182-367-01	o	RETAINER (T), SHAFT
23	3-182-368-01	o	COVER, REEL
24	3-182-369-01	s	WHEEL, WORM
25	3-182-375-03	o	DISK HUB, REEL
26	3-182-382-01	s	GEAR (T), CRANK
27	3-182-402-01	o	GUIDE, PLATE
28	3-307-381-00	s	SPRING, TENSION
29	3-491-247-00	s	SPRING, COMPRESSION
30	3-648-217-00	o	SPRING, TENSION
31	3-669-596-01	s	WASHER (2.3), STOPPER
32	3-701-439-01	s	WASHER, POLY 3MM DIA 0.13T
32	3-701-439-11	s	WASHER, POLY 3MM DIA 0.25T
32	3-701-439-21	s	WASHER, POLY 3MM DIA 0.5T
33	3-701-506-01	s	SET SCREW, DOUBLE POINT 3 × 4
34	3-717-223-01	s	SHAFT, SLIDE
35	3-717-230-01	o	BRACKET, LIMITER
36	3-717-231-01	o	HOLDER, LIMITER
37	3-717-266-01	o	CAP (S), CG SHAFT

No.	Part No.	SP	Description
101	A-8267-680-B	s	BOX ASSY, GEAR
102	A-8267-681-C	o	RING ASSY, LOADING
103	A-8267-683-A	o	ROLLER ASSY, ADJUSTMENT RING
104	A-8267-699-C	o	ROLLER ASSY, CLEANING
105	X-3167-224-1	s	ROLLER ASSY, PRECEDING
107	X-3167-226-1	s	ARM ASSY, AT CLEANER
108	X-3167-232-1	s	ROLLER ASSY, C
109	X-3167-233-2	o	ARM ASSY, C MAIN
110	X-3167-234-1	o	DECK ASSY, C
111	X-3167-235-4	o	ARM ASSY, DRIVING
112	X-3167-236-1	o	ROLLER (B) ASSY, RING
113	X-3717-215-3	s	ARM ASSY, PINCH ROLLER
114	1-648-922-11	o	PTC-67 BOARD
115	1-698-152-11	s	MOTOR, DC (SVD-1449)
116	3-171-423-02	o	JOINT, MOTOR
117	3-180-036-01	s	GEAR, LIMITER
118	3-183-653-02	s	RUBBER, LIMITER
119	3-182-242-01	o	WHEEL, WORM
120	3-182-276-01	o	SPRING, DRIVING
121	3-182-293-01	s	FLANGE, GUIDE
122	3-182-294-01	s	GUIDE, TAPE
123	3-182-346-02	s	SPRING, PINCH ARM
124	3-182-347-01	s	FLANGE, PRECEDING UPPER
125	3-182-349-01	o	RETAINER, SHAFT
126	3-182-350-02	s	SPRING, CLEANER ARM
127	3-182-389-02	s	CLEANER, AT
128	3-182-390-01	o	GEAR, WORM
129	3-182-453-01	o	GUIDE, P
130	3-533-373-21	s	SPRING, TENSION
131	3-549-887-00	s	SPRING, COIL, COMPRISION
132	3-657-841-71	s	SPACER (2 × 6.5)
133	3-669-465-01	s	WASHER (1.5), STOPPER
134	3-669-596-01	s	WASHER (2.3), STOPPER
135	3-675-866-00	s	ROLLER, RING
136	3-680-812-00	s	FLANGE, LOWER
137	3-682-166-21	s	SPACER DIA 2
138	3-698-829-01	s	NUT (M2)
139	3-701-437-21	s	WASHER POLY, 2MM DIA 0.25T
140	3-701-439-21	s	WASHER POLY, 3MM DIA 0.5T
141	3-721-333-01	s	SPRING, COMPRESSION
142	4-602-490-00	o	SPRING, TENSION
143	8-719-939-05	s	PHOTO INTERRUPTTER GP1S54

LOARDING RING

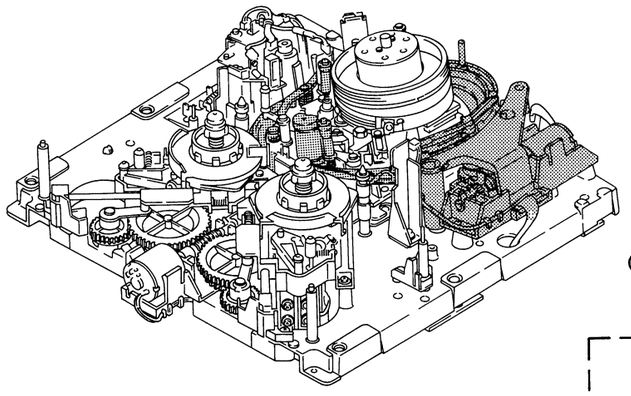

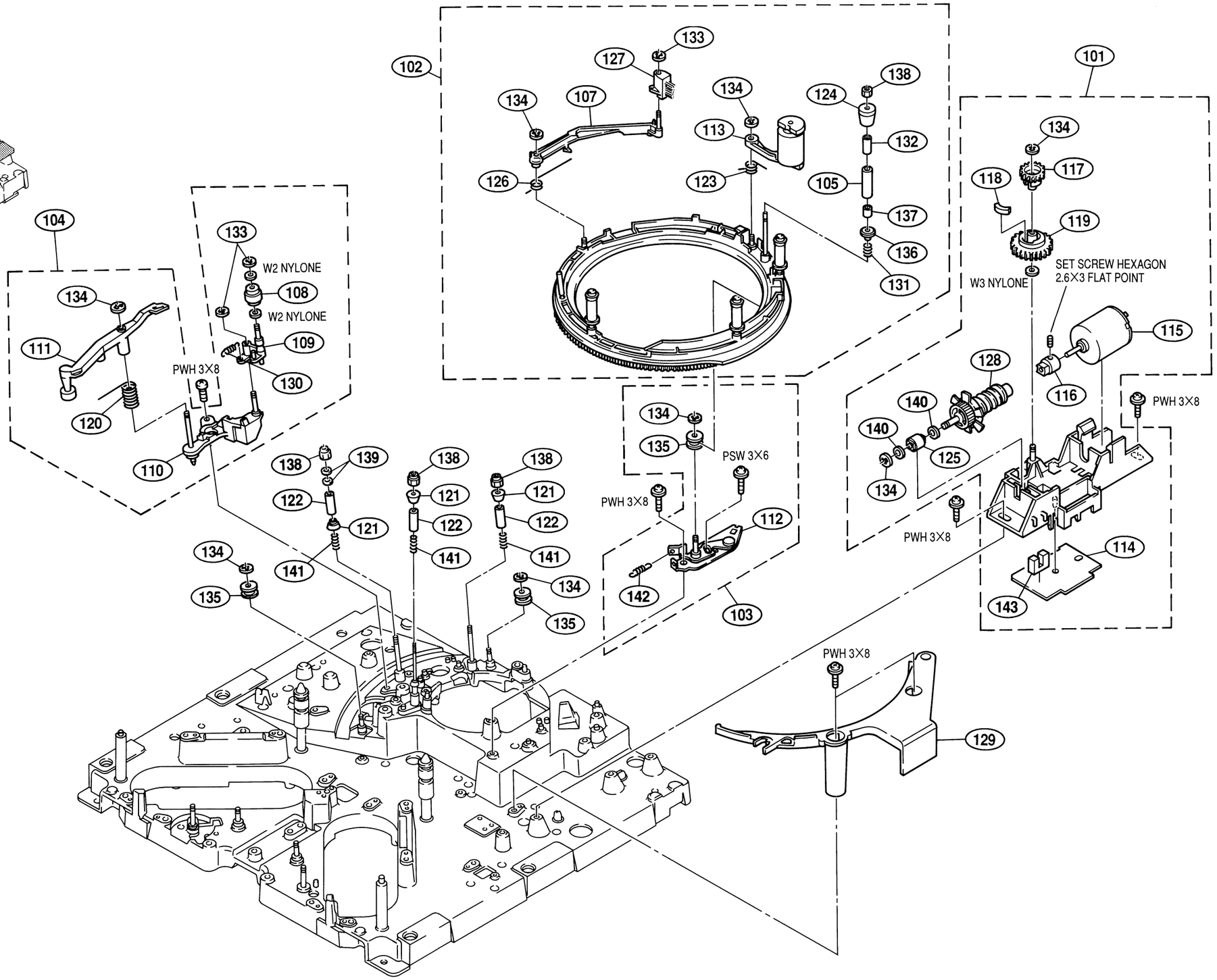

REEL CHASSIS (2)

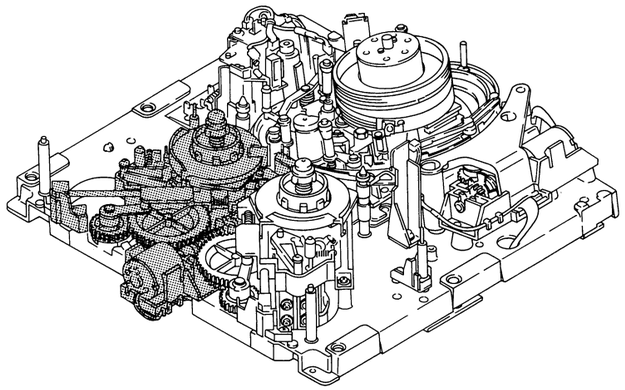

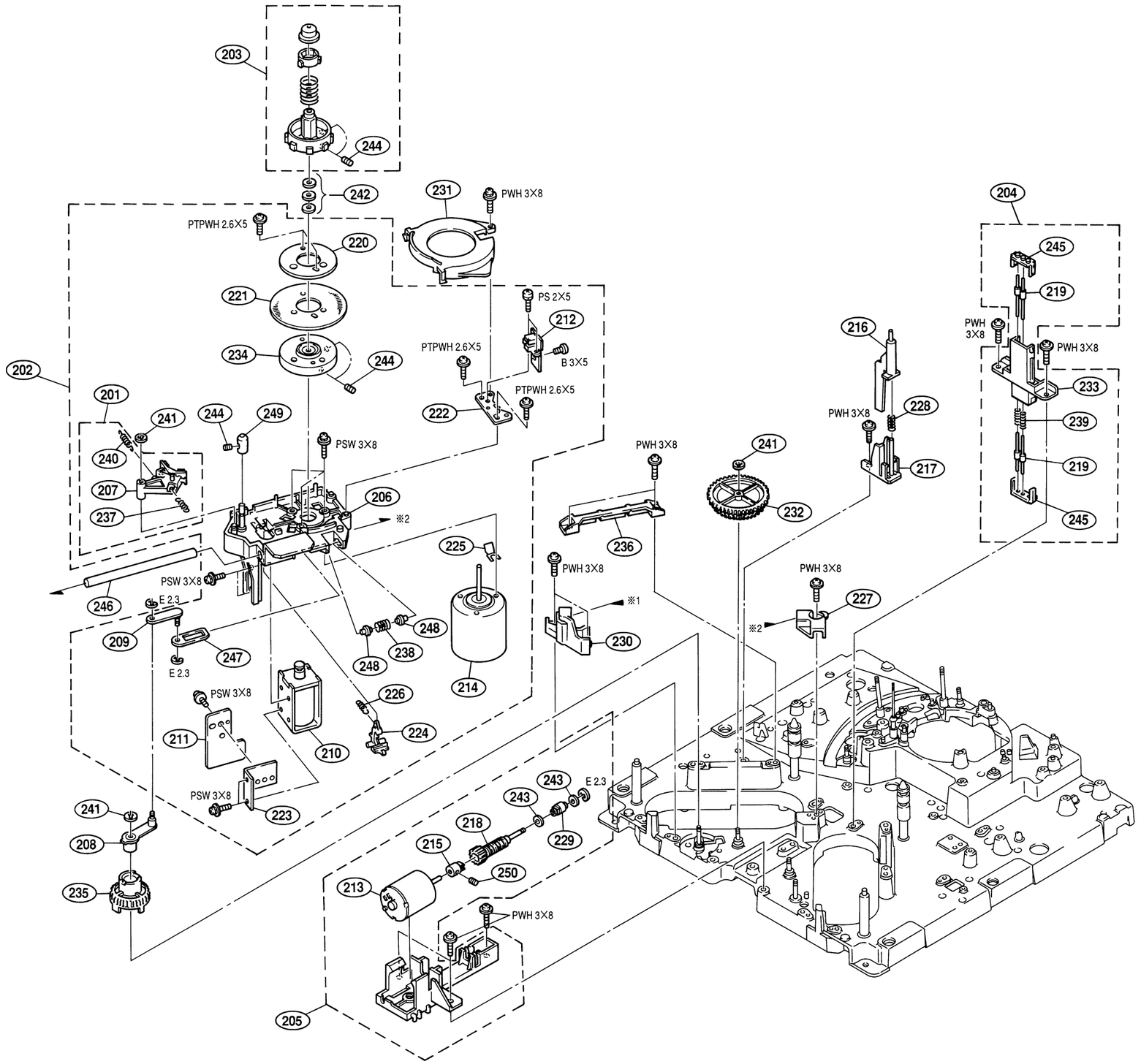

Reel Chassis (2)

No.	Part No.	SP	Description
201	A-8267-685-C	s	BRAKE ASSY
202	A-8323-771-A	s	TABLE (S) ASSY(RP), RS
203	A-8267-690-B	s	TABLE ASSY, REEL
204	A-8267-691-B	s	MC ASSY
205	A-8267-698-A	o	MOTOR ASSY, LS
206	X-3167-229-3	o	PLATE (S) ASSY, REEL MOTOR
207	X-3167-231-3	s	LINING ASSY
208	X-3717-202-3	o	ARM ASSY, CRANK
209	X-3717-204-1	o	ARM (B) ASSY, CRANK
210	1-454-417-41	s	SOLENOID, PLUNGER
211	1-648-925-11	o	RM-127 BOARD
212	1-648-923-11	o	SE-207 BOARD
213	1-698-152-11	s	MOTOR, DC (SVD-1449)
214	A-8323-773-A	s	MOTOR ASSY(RP), REEL
215	3-171-423-02	o	JOINT, MOTOR
216	3-180-745-01	o	LEVER, MR **(UVW-1400/1400P)**
217	3-180-746-01	o	HOLDER, MR **(UVW-1400/1400P)**
218	3-182-266-01	o	WORM
219	3-182-277-01	o	PIN, MC
220	3-182-279-02	o	RETAINER, DISK
221	3-182-280-02	o	DISK, REEL
222	3-182-282-01	o	SHEET METAL, SENSOR FITTING
223	3-182-283-01	o	SHEET METAL, (S) RM FITTING
224	3-182-284-03	o	ARM, BRAKE RELEASE
225	3-182-285-01	s	SPACER
225	3-182-285-11	s	SPACER
226	3-182-286-01	s	SPRING, TENSION
227	3-182-292-01	o	RETAINER (ST), SHAFT
228	3-182-295-01	o	SPRING, COMPRESSION **(UVW-1400/1400P)**
229	3-182-349-01	o	RETAINER, SHAFT
230	3-182-366-01	o	RETAINER (S), SHAFT
231	3-182-368-01	o	COVER, REEL
232	3-182-369-01	s	WHEEL, WORM
233	3-182-372-01	o	HOLDER, MC
234	3-182-375-02	o	DISK HUB, REEL
235	3-182-383-01	s	GEAR (S), CRANK
236	3-182-402-01	o	GUIDE, PLATE
237	3-307-381-00	s	SPRING, TENSION
238	3-491-247-00	s	SPRING, COMPRESSION
239	3-554-202-00	o	SPRING, COMPRESSION
240	3-648-217-00	o	SPRING, TENSION
241	3-669-596-01	s	WASHER (2.3), STOPPER
242	3-701-439-01	s	WASHER POLY 3MM DIA, 0.13T
242	3-701-439-11	s	WASHER POLY 3MM DIA, 0.25T
242	3-701-439-21	s	WASHER POLY 3MM DIA, 0.5T
243	3-701-439-21	s	WASHER POLY 3MM DIA, 0.5T
244	3-701-506-01	s	SET SCREW, DOUBLE POINT 3 × 4
245	3-717-207-01	s	COVER, M/C DETECTION HOLDER
246	3-717-223-01	s	SHAFT, SLIDE
247	3-717-230-01	o	BRACKET, LIMITER
248	3-717-231-01	o	HOLDER, LIMITER
249	3-717-266-01	o	CAP (S), CG SHAFT
250	7-621-734-09	s	SET SCREW, DOUBLE POINT 2.6 × 3

18-9

Drum &Tension Regulator Assembly

No.	Part No.	SP	Description
301	A-8263-056-A	s	HEAD DRUM ASSY, DBH-43A-R **(UVW-1400)**
301	A-8260-976-A	s	HEAD DRUM ASSY, DBH-41A-R **(UVW-1200)**
301	A-8263-058-A	s	HEAD DRUM ASSY, DBH-44A-R **(UVW-1400P)**
301	A-8260-978-A	s	HEAD DRUM ASSY, DBH-42A-R **(UVW-1200P)**
302	A-8263-055-A	s	UPPER DRUM ASSY, DBR-43-R **(UVW-1400)**
302	A-8260-977-A	s	UPPER DRUM ASSY, DBR-41-R **(UVW-1200)**
302	A-8263-057-A	s	UPPER DRUM ASSY, DBR-44-R **(UVW-1400P)**
302	A-8260-979-A	s	UPPER DRUM ASSY, DBR-42-R **(UVW-1200P)**
303	A-8267-693-A	s	TENSION REGULATOR ASSY
304	X-3166-376-2	s	GROUND ASSY, SHAFT
305	X-3167-218-1	o	HOOK ASSY, TR
306	X-3167-219-1	o	BASE ASSY, TR HOOK
307	X-3167-220-1	o	PLATE, ADJUSTMENT ASSY, TR
308	X-3167-241-1	s	ARM ASSY, RETURN
309	X-3675-851-0	s	ROLLER ASSY, TR
310	1-648-921-11	o	TR-84 BOARD
311	1-648-927-12	o	PTC-68 BOARD
312	1-698-179-11	s	MOTOR, DC (CAPSTAN)
313	1-810-381-11	s	SENSOR, DEW CONDENSATION
314	2-618-901-00	s	SPRING
315	3-171-234-01	s	SPACER, FLANGE 0.01T
316	3-171-234-11	s	SPACER, FLANGE 0.03T
317	3-171-234-21	s	SPACER, FLANGE 0.05T
318	3-171-579-02	o	SPRING,LEAF, TENSION REGULATOR
319	3-182-216-01	o	BRACKET, GROUND
320	3-182-217-03	o	BRACKET, TAPE
321	3-182-257-02	s	HOLDER, DME
322	3-182-274-01	o	PLATE, ADJUSTMENT, RETURN
323	3-182-275-01	o	COVER, MAGNET
324	3-182-288-02	o	PROTECTOR
325	3-182-289-02	o	BASE, TR
326	3-437-173-02	o	SCREW, HEAD ADJUSTING
327	3-653-350-00	s	SPRING, COMPRESSION
328	3-669-465-01	s	WASHER (1.5), STOPPER
329	3-669-596-01	s	WASHER (2.3), STOPPER
330	3-677-749-03	s	RETAINER, B
331	3-677-752-00	s	NUT, ADJUSTMENT, T
332	3-680-828-01	o	MAGNET
333	3-680-860-01	s	SPRING, TENSION(POWER TENSION)
334	3-717-253-01	s	ROLLER
335	3-729-125-11	o	SCREW (M2.6 × 8)
336	7-621-731-08	s	SET SCREW, FLAT POINT 2 × 2.5
337	7-683-176-21	s	SET SCREW, SLOT CONE POINT 3 × 6
338	8-719-939-05	s	PHOTO INTERRUPTER GP1S54
339	8-745-001-07	s	DM-230-1

18-10

Drum & Tension Regulator Assembly

DRUM & TENSION REGULATOR ASSEMBLY

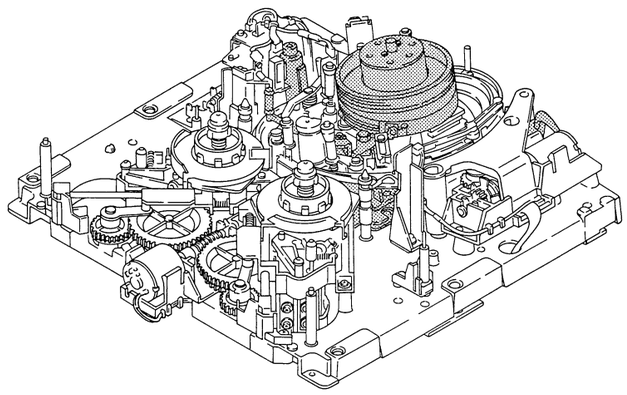

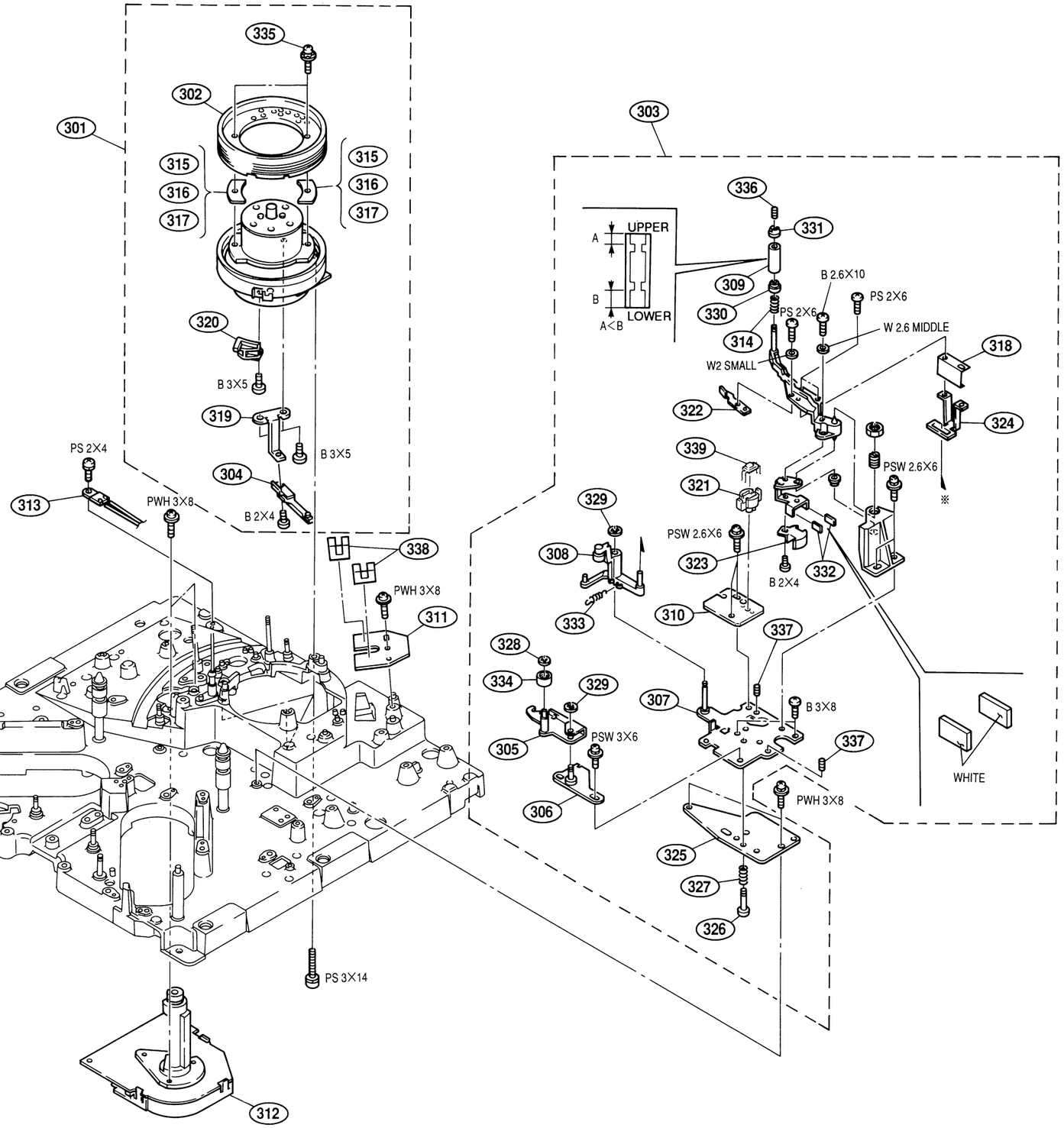

18-11

DR-214 BOARD ASSEMBLY

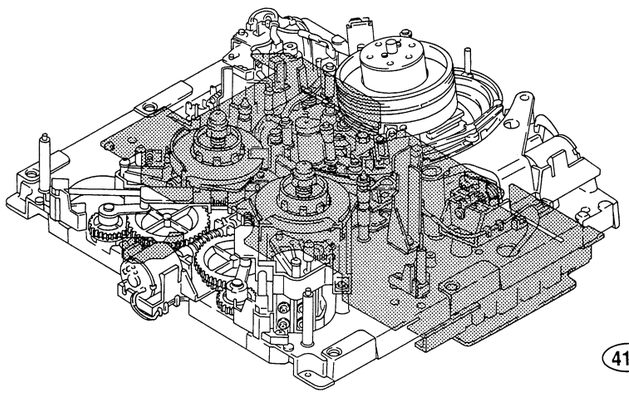

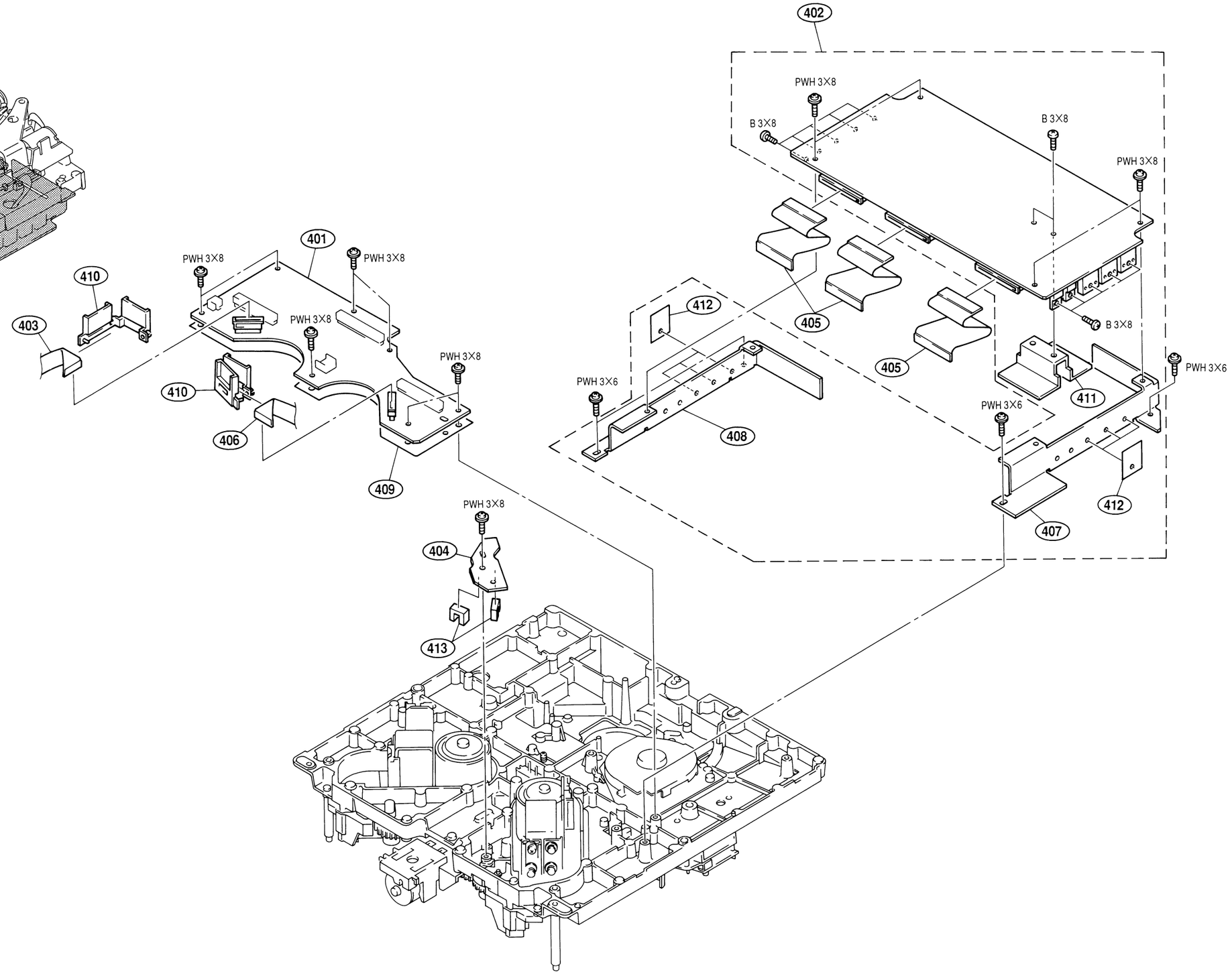

No.	Part No.	SP	Description
401	A-8275-288-A	o	COMPLETE PCB, MS-39A **(UVW-1200/1200P)**
401	A-8275-291-A	o	COMPLETE PCB, MS-39 **(UVW-1400/1400P)**
402	A-8275-290-A	o	COMPLETE PCB, DR-214
403	1-751-633-12	s	WIRE, FLEXIBLE CARD
404	1-648-926-12	o	PTC-66 BOARD
405	1-558-261-31	s	WIRE, FLEXIBLE CARD
406	1-751-634-12	s	WIRE, FLEXIBLE CARD
407	3-182-357-01	o	HEAT SINK (L), DR
408	3-182-358-01	o	HEAT SINK (R), DR
409	3-182-400-01	o	SHEET, MS
410	3-182-401-02	o	HOLDER, FLAT CABLE
411	3-183-144-01	o	HEAT SINK (D), DR
412	4-911-232-01	s	SHEET INSULATING
413	8-719-939-05	s	PHOTO INTERRUPTER GP1S54

Press Assy, Pinch

No.	Part No.	SP	Description
501	A-8267-676-A	o	BLADE ASSY **(UVW-1200/1200P)**
502	A-8267-677-B	s	HEAD (P) ASSY, AT **(UVW-1200/1200P)**
502	A-8310-058-B	s	HEAD (R-P) ASSY, AT **(UVW-1400/1400P)**
503	A-8267-694-A	s	HEAD ASSY, CTL
504	A-8267-695-A	s	PRESS ASSY, PINCH
505	A-8267-696-A	o	SENSOR ASSY, T
506	A-8267-697-A	o	HEAD ASSY, FE **(UVW-1400/1400P)**
507	X-3167-210-2	o	SUPPORT (P) ASSY, AT
508	X-3167-211-2	o	PLATE, ADJUSTMENT ASSY, P
509	X-3167-212-2	s	CLEANING BLADE ASSY **(UVW-1200/1200P)**
510	X-3167-221-1	o	BRACKET ASSY, CTL HEAD
511	X-3167-316-2	s	HEAD (EF291-21) ASSY **(UVW-1400/1400P)**
512	1-454-338-00	s	SOLENOID, PLUNGER
513	1-506-481-11	o	PIN, CONNECTOR 2P
514	1-543-316-31	s	HEAD, SENSING (SMALL TYPE)
515	1-564-001-11	o	PIN, CONNECTOR 2P
516	1-564-005-11	o	PIN, CONNECTOR 6P
517	1-564-013-11	o	PIN, CONNECTOR 3P **(UVW-1400/1400P)**
518	1-622-596-11	o	PC BOARD, PD-35
519	2-279-715-01	s	RIVET, NYLON
520	3-182-244-01	o	LEVER, P PRESS
521	3-182-250-01	o	HOLDER, S SENSOR
522	3-182-255-01	s	SPRING, CTL
523	3-182-256-01	o	DECK, CTL HEAD
524	3-182-317-01	o	SHAFT, AT FIXED
525	3-182-376-02	o	CASE (1), AT SHIELD
526	3-182-377-03	o	CASE (2), AT SHIELD
527	3-182-388-03	o	BRACKET, RP
528	3-182-391-01	o	HOLDER, T SENSOR
529	3-537-674-03	s	SPRING, TENSION
530	3-642-719-01	o	SPACER (2.6×11)
531	3-653-382-01	o	SPACER (4×25)
532	3-698-829-01	s	NUT (M2)
533	3-701-441-21	s	WASHER, POLY 4MM DIA 0.5T
534	3-717-247-01	o	LIMITER, P
535	3-717-248-01	o	SPRING
536	3-717-249-01	o	STOPPER, P
537	3-717-250-02	o	SHAFT, JOINT, P
538	3-738-730-01	s	SPRING, COMPRESSION
539	4-812-134-21	s	RIVET NYLON, 3.5
540	7-621-712-46	s	SET SCREW, SLOT FLAT POINT 2.6×5
541	7-621-712-55	s	SET SCREW, SLOT CONE POINT 2.6×6
542	8-825-554-83	s	HEAD, CTL PS244-21B
543	8-825-779-11	s	HEAD EPS244-2103H **(UVW-1400/1400P)**
543	8-825-778-91	s	HEAD PS244-2103G **(UVW-1200/1200P)**
544	3-639-647-00	s	WASHER (0.5T)

18-14

Press Assy, Pinch

PRESS ASSY, PINCH

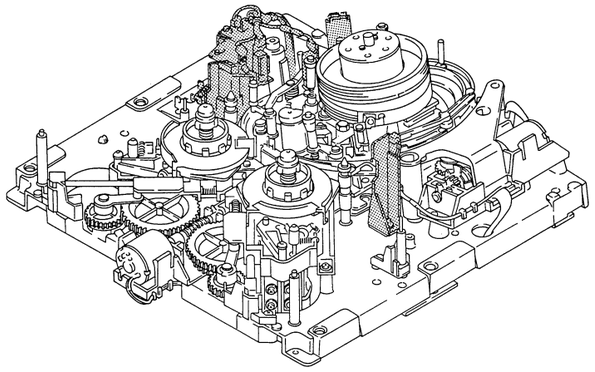

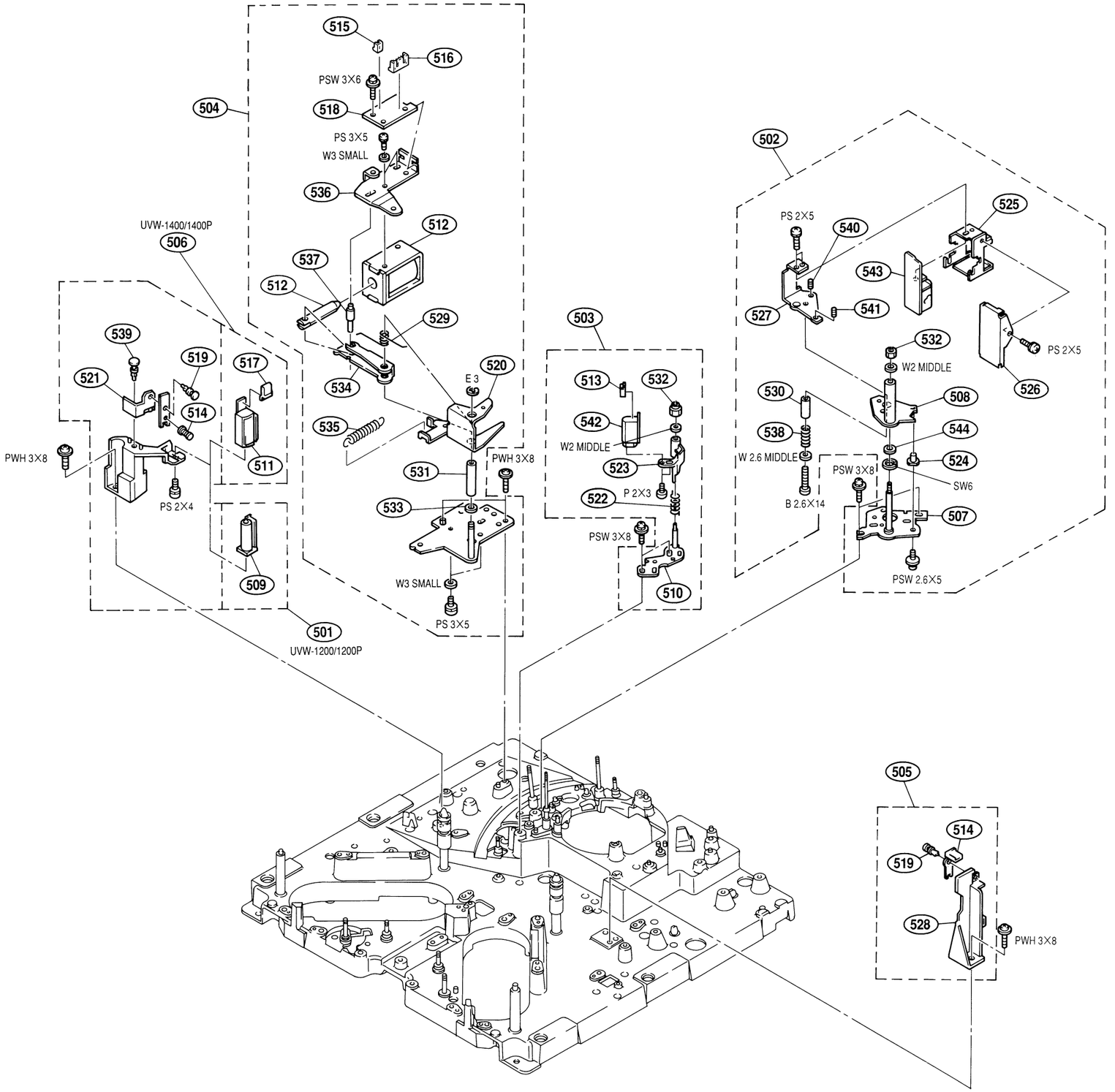

18-15

CASSETTE COMPARTMENT ASSEMBLY

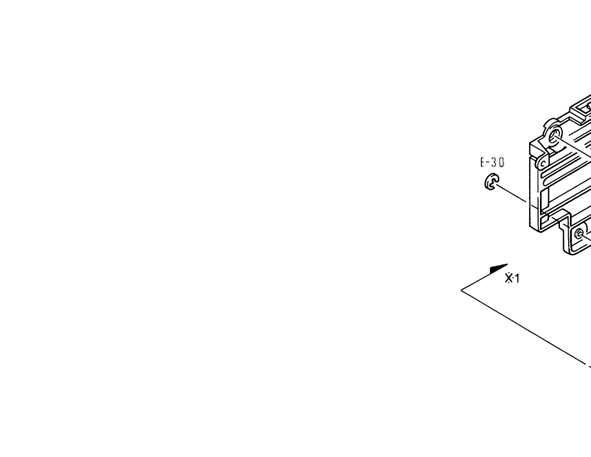

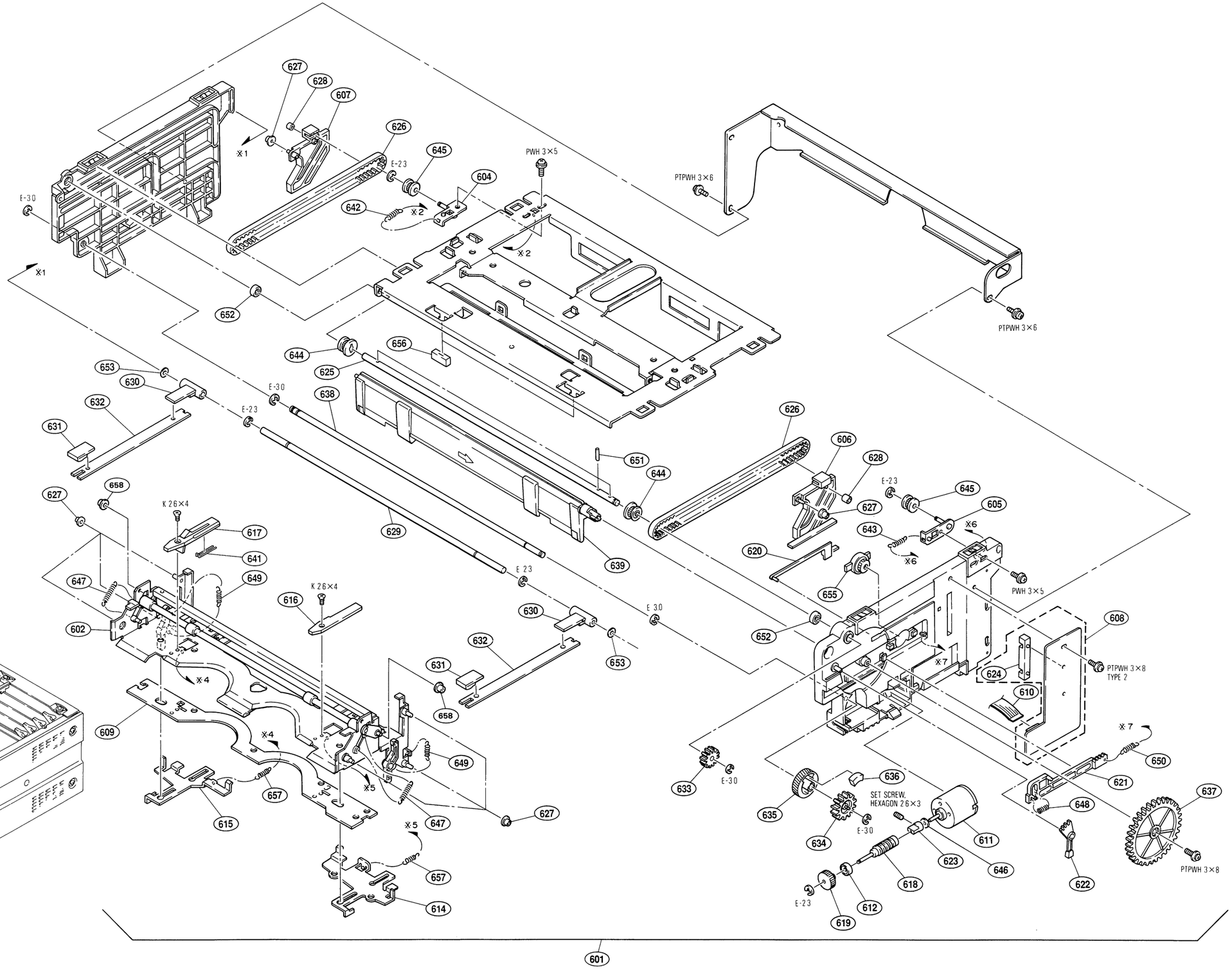

Cassette Compartment Assembly

No.	Part No.	SP	Description
601	A-8267-863-D	s	CASSETTE COMPARTMENT ASSY
602	A-8276-957-B	s	STAGE ASSY(RP)
604	X-3166-065-1	o	DECK (L) ASSY, PULLEY
605	X-3166-066-1	o	DECK (R) ASSY, PULLEY
606	X-3167-447-3	o	SLIDER (R) ASSY
607	X-3167-446-3	o	SLIDER (L) ASSY
608	A-8276-626-B	o	MOUNTED CIRCUIT BOARD, CL-29
609	A-8276-625-A	o	MOUNTED CIRCUIT BOARD, PC-70
610	1-751-644-11	s	WIRE, FLEXIBLE CARD (5P)
611	1-698-152-11	s	MOTOR, DC SVD-1499
612	3-188-745-01	s	BEARING, BALL, (B) (NO FRANGE)
614	3-171-367-05	o	SWITCH (R), IN
615	3-171-398-04	o	SWITCH (L), IN
616	3-171-399-02	o	GUIDE (R), CASSETTE
617	3-171-400-04	o	GUIDE (L), CASSETTE
618	3-171-418-02	s	WORM
619	3-171-419-11	s	WHEEL
620	3-171-420-03	o	SHUTTER
621	3-171-421-01	o	SLIDER, DOOR SWITCHING
622	3-171-422-01	o	LEVER, DOOR SWITCHING
623	3-171-423-02	o	JOINT, MOTOR
624	3-171-424-02	o	HOLDER, SENSER
625	3-171-457-02	o	SHAFT, JOINT
626	3-171-458-01	s	BELT, TIMING
627	3-171-459-01	s	ROLLER, GUIDE
628	3-171-460-01	s	ROLLER, SLIDER
629	3-171-461-01	o	SHAFT, RETAINER, L CASSETTE
630	3-171-462-01	o	HOLDER, SHAFT
631	3-171-463-03	o	PLATE
632	3-171-464-01	o	SPRING, LEAF
633	3-171-465-01	o	GEAR, DRIVING
634	3-171-466-02	o	GEAR, LIMITER
635	3-181-430-01	o	WHEEL, WORM
636	3-181-431-01	o	RUBBER, LIMITER
637	3-171-479-01	o	GEAR, MIDWAY
638	3-171-480-01	o	SHAFT, WORM WHEEL
639	3-171-510-02	s	DOOR, CASSETTE
641	3-176-139-01	s	SPRING, C GUIDE
642	3-176-578-01	s	SPRING, TENSION
643	3-176-579-01	s	SPRING, TENSION
644	3-176-583-01	o	PULLEY (A)
645	3-176-584-01	o	PULLEY (B)
646	3-182-706-01	s	SPACER
647	3-548-757-00	s	SPRING, TENSION
648	3-579-759-00	s	SPRING, COMPRESSION
649	3-646-214-00	s	SPRING
650	3-672-461-00	s	SPRING, TENSION
651	3-677-193-00	o	PIN, STOPPER
652	3-698-217-01	s	BEARING (NO FLANGE), BALL
653	3-701-439-21	s	WASHER
655	3-712-786-01	s	DAMPER, OIL
656	3-717-369-04	o	STOPPER, DOOR
657	4-858-799-00	s	SPRING, TENSION
658	3-188-273-01	s	ROLLER(B), GUIDE

18-17

Chassis & Ornamental Panel Block

No.	Part No.	SP	Description
701	A-6771-428-A	s	STAY ASSY, CASSETTE COMPARTMENT
702	A-8310-062-E	o	PANEL ASSY, FRONT **(UVW-1200)**
702	A-8310-100-E	o	PANEL (P) ASSY, FRONT **(UVW-1200P)**
702	A-8310-054-E	o	PANEL ASSY, FRONT **(UVW-1400)**
702	A-8310-099-E	o	PANEL (P) ASSY, FRONT **(UVW-1400P)**
703	A-8267-665-C	o	LID, UPPER ASSY
704	A-8267-667-C	o	DOOR ASSY, FRONT
705	A-8267-670-B	o	RETAINER (L) ASSY, PC BOARD
706	A-8267-673-B	o	RETAINER (S) ASSY, PC BOARD **(UVW-1400/1400P)**
707	X-3166-071-1	s	KNOB ASSY (B), VOL
708	3-182-395-02	o	GEAR, DAMPER
709	3-182-406-01	o	GUARD, POWER SW
710	3-182-441-03	o	PLATE, BOTTOM
711	3-182-451-02	o	CABINET (RIGHT)
712	3-182-452-02	o	CABINET (LEFT)
713	3-642-656-01	s	FOOT
714	3-669-595-00	s	WASHER (2), STOPPER
715	3-688-102-01	o	SPACER, M4
716	3-701-438-21	s	WASHER
717	3-712-786-01	s	DAMPER, OIL
718	3-717-306-01	o	SPRING
719	3-717-377-01	o	FRAME (SQUARE 17), ORNAMENTAL
720	3-736-779-21	s	MAGNET

18-18

Chassis & Ornamental Panel Block

CHASSIS & ORNAMENTAL PANEL BLOCK

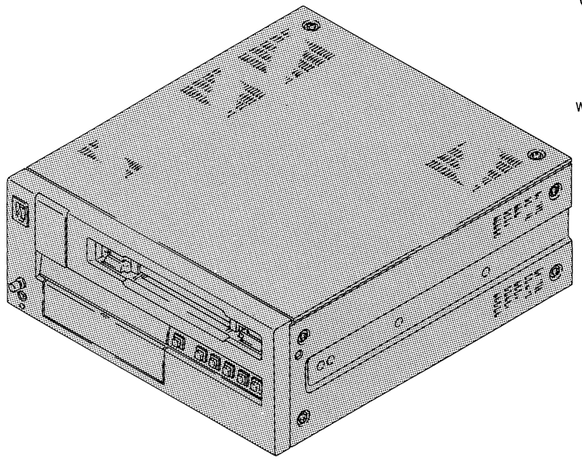

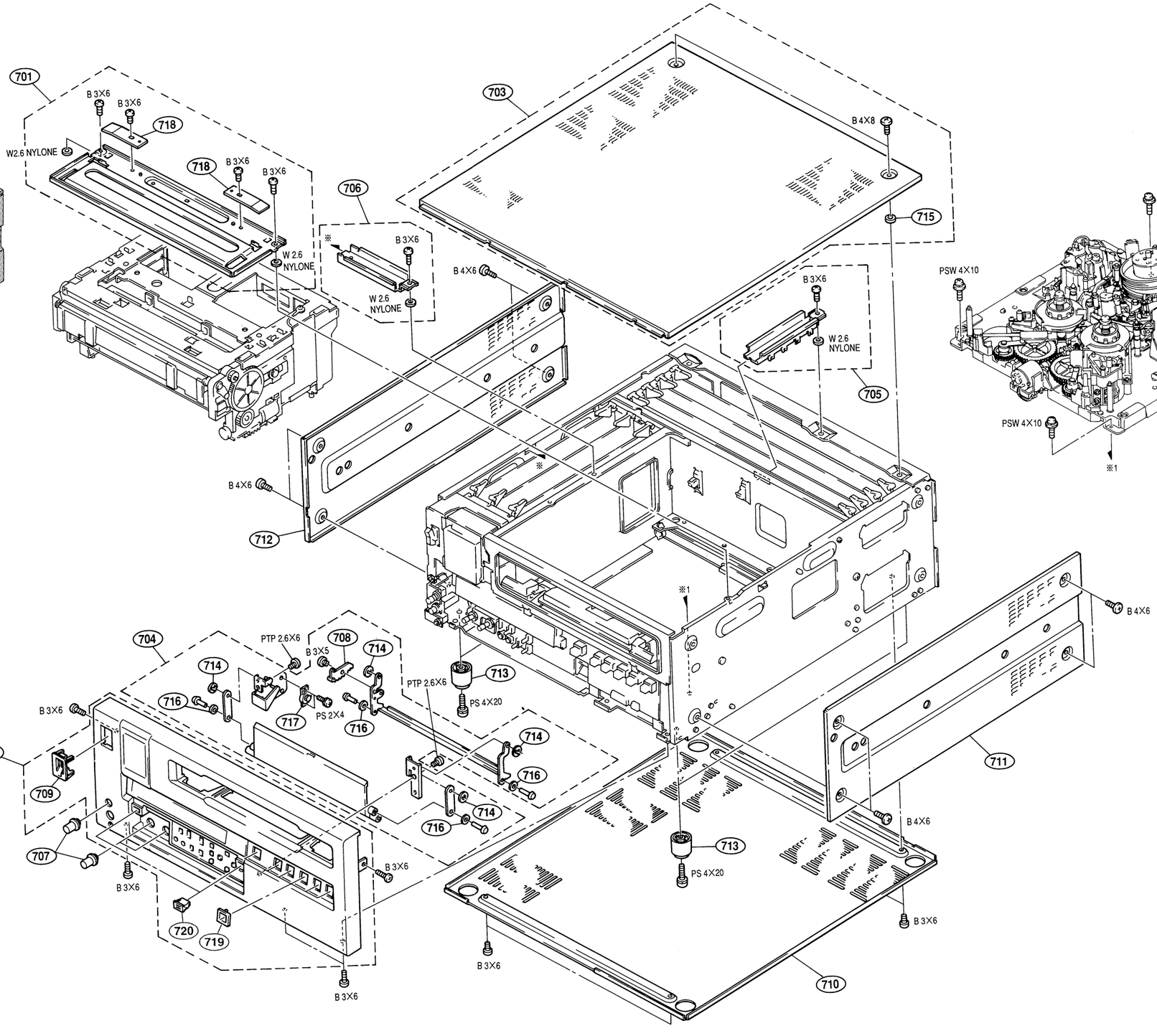

18-19

Card Rack Block (1)

CARD RACK BLOCK (1)

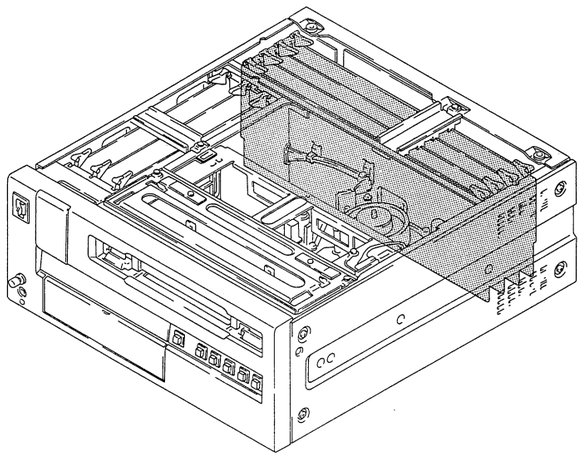

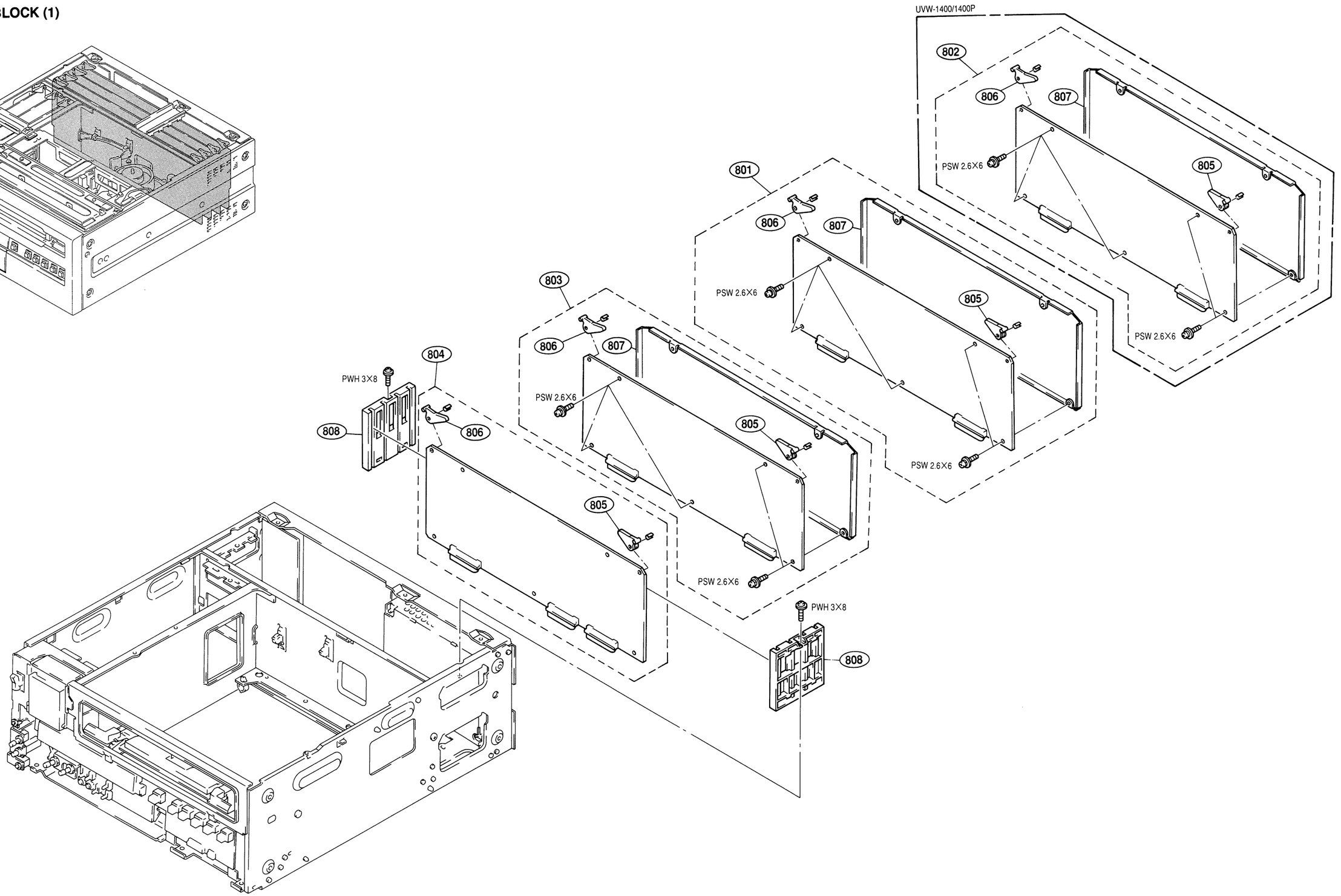

18-20

Card Rack Block (1)

No.	Part No.	SP	Description
801	A-8275-567-A	o	COMPLETE PCB, VP-44A **(UVW-1200)**
801	A-8275-571-A	o	COMPLETE PCB, VP-44 **(UVW-1400)**
801	A-8275-605-A	o	COMPLETE PCB, VP-44P **(UVW-1400P)**
801	A-8275-610-A	o	COMPLETE PCB, VP-44AP **(UVW-1200P)**
802	A-8275-570-A	o	COMPLETE PCB, VRA-5A **(UVW-1400)**
802	A-8275-604-A	o	COMPLETE PCB, VRA-5AP **(UVW-1400P)**
803	A-8275-572-A	o	COMPLETE PCB, TBC-28 **(UVW-1400/1200)**
803	A-8275-606-A	o	COMPLETE PCB, TBC-28P **(UVW-1400P/1200P)**
804	A-8275-573-A	o	COMPLETE PCB, SS-53A
805	3-179-084-01	s	LEVER, PC BOARD (R)
806	3-179-085-01	s	LEVER, PC BOARD (L)
807	3-182-386-02	o	PLATE, SHIELD (L), CARD
808	3-182-438-02	o	GUIDE (L), PCB

18-21

Card Rack Block (2)

No.	Part No.	SP	Description
901	A-8275-574-A	o	COMPLETE PCB, RP-70B **(UVW-1400)**
901	A-8275-607-A	o	COMPLETE PCB, RP-70BP **(UVW-1400P)**
902	A-8275-575-A	o	COMPLETE PCB, AP-31B **(UVW-1400)**
902	A-8275-608-A	o	COMPLETE PCB, AP-31BP **(UVW-1400P)**
903	A-8275-576-A	o	COMPLETE PCB, AR-14A **(UVW-1400)**
903	A-8275-609-A	o	COMPLETE PCB, AR-14AP **(UVW-1400P)**
904	A-8276-857-A	o	MOUNTED PCB, MB-520A **(UVW-1200)**
904	A-8276-861-A	o	MOUNTED PCB, MB-520 **(UVW-1400)**
904	A-8276-879-A	o	MOUNTED PCB, MB-520P **(UVW-1400P)**
904	A-8276-880-A	o	MOUNTED PCB, MB-520AP **(UVW-1200P)**
905	A-8276-864-A	o	MOUNTED PCB, MB-471B **(UVW-1400/1400P)**
906	1-751-632-13	s	WIRE, FLEXIBLE CARD 34P **(UVW-1400/1400P)**
907	3-179-084-01	s	LEVER, PC BOARD (R)
908	3-179-085-01	s	LEVER, PC BOARD (L)
909	3-182-298-01	o	CASE, SHIELD (LID), AP2 **(UVW-1400/1400P)**
910	3-182-316-01	o	CASE, SHIELD (LID), PR70V **(UVW-1400/1400P)**
911	3-182-351-01	o	CASE, SHIELD, AP (2B) **(UVW-1400/1400P)**
912	3-182-385-02	o	PLATE, SHIELD (S), CARD
913	3-182-407-01	o	LID, AR CASE, SHIELD **(UVW-1400/1400P)**
914	3-182-439-02	o	GUIDE (S), PCB **(UVW-1400/1400P)**
915	A-8275-568-A	o	COMPLETE PCB, AP-34 **(UVW-1200)**
915	A-8275-611-A	o	COMPLETE PCB, AP-34P **(UVW-1200P)**
916	3-183-976-01	o	GUIDE (P), PCB **(UVW-1200/1200P)**

18-22

Card Rack Block (2)

CARD RACK BLOCK (2)

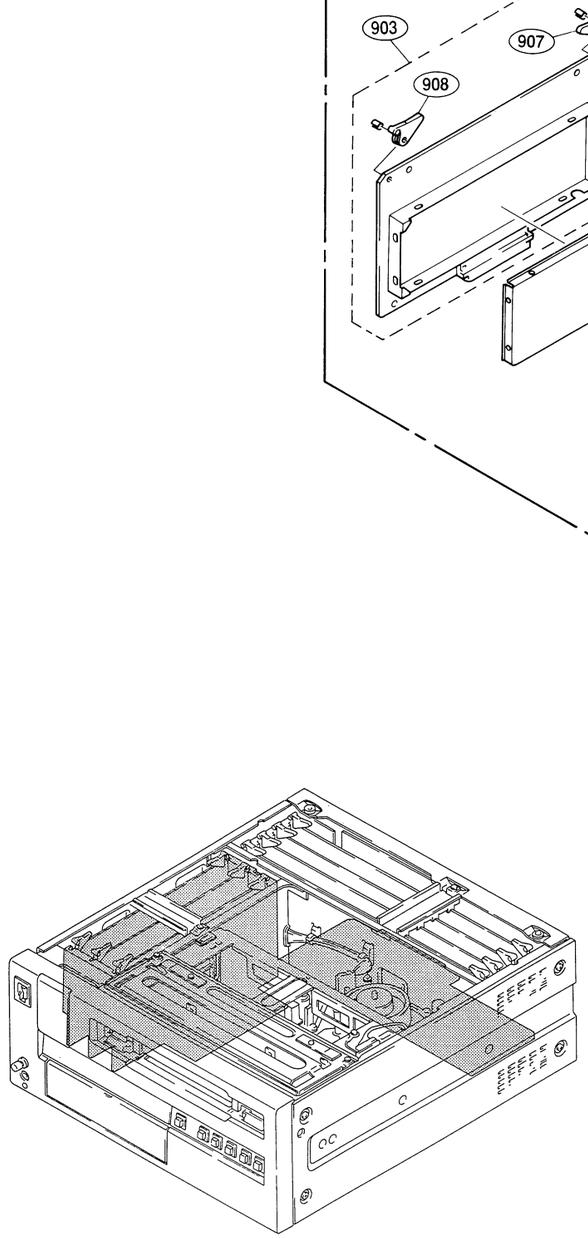

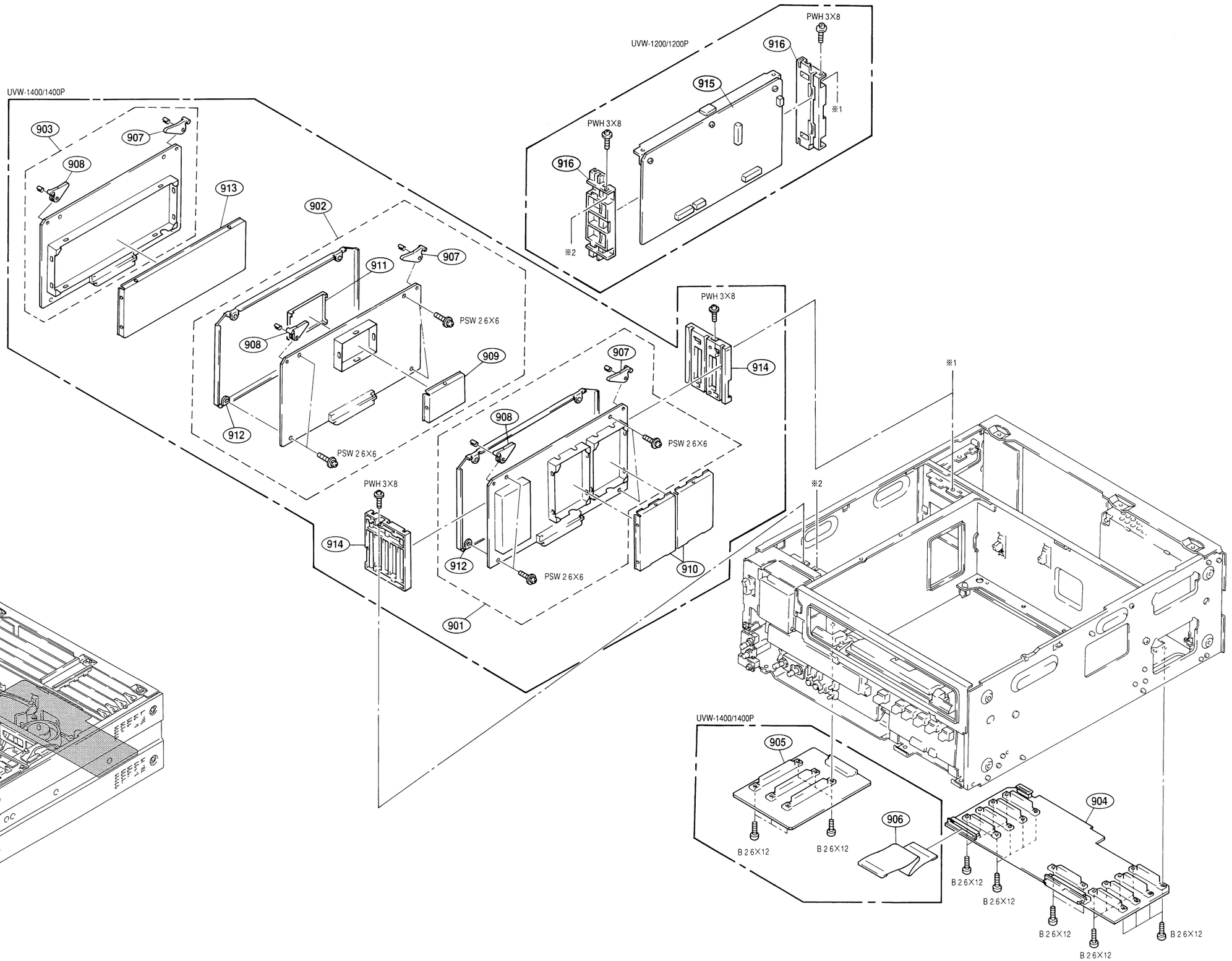

18-23

CHASSIS BLOCK

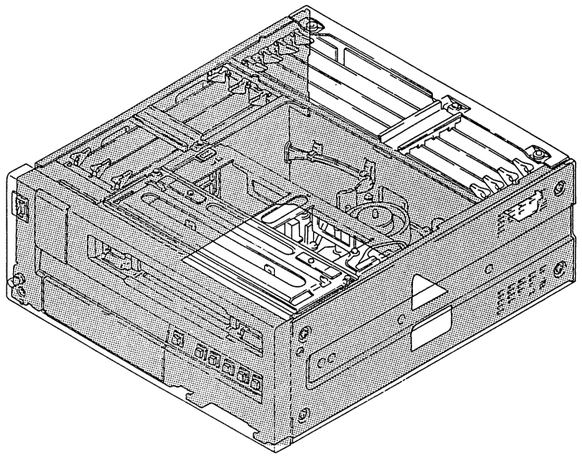

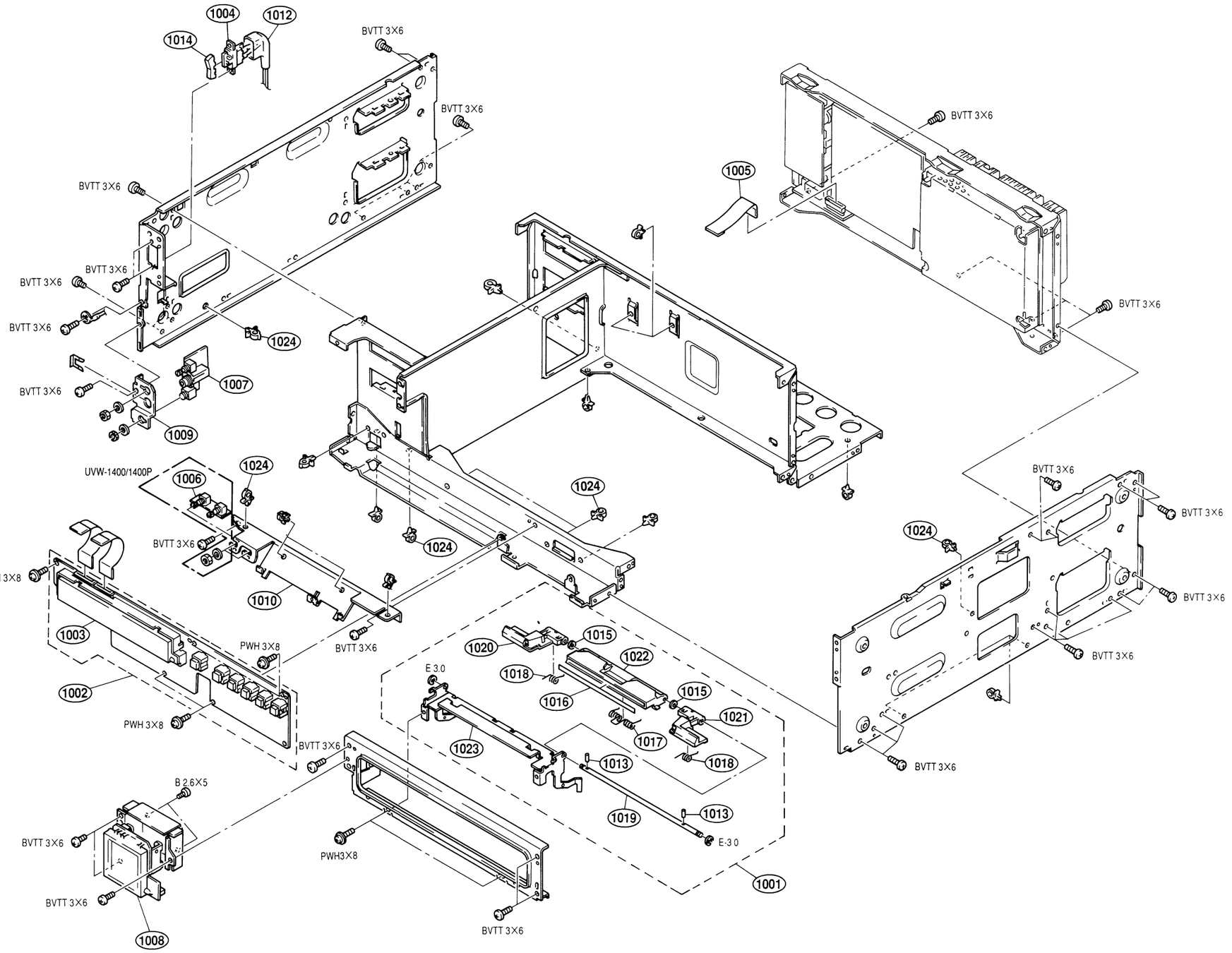

No.	Part No.	SP	Description
1001	A-6751-377-G	o	GUIDE ASSY, SC
1002	A-8275-569-A	o	COMPLETE PCB, KY-290A **(UVW-1200/1200P)**
1002	A-8275-577-A	o	COMPLETE PCB, KY-290 **(UVW-1400/1400P)**
1003	1-517-246-11	s	INDICATION TUBE, FLUORESCENT
1004	⚠ 1-570-117-31	s	SWITCH, SEESAW (AC POWER)
1005	1-575-733-11	s	WIRE, FLAT TYPE (17 CORE)
1006	1-648-916-11	o	VR-155 BOARD **(UVW-1400/1400P)**
1007	1-648-917-12	o	HP-61 BOARD
1008	1-810-374-11	s	INDICATOR TUBE MODULE, FLUORES **(UVW-1400/1400P)**
1009	3-182-297-01	o	BRACKET, HP FIXED
1010	3-182-449-01	o	BRACKET, VR
1012	3-659-969-11	o	COVER, SWITCH
1013	3-677-193-00	o	PIN, STOPPER
1014	3-688-814-01	s	CAP, SWITCH
1015	3-701-441-21	s	WASHER
1016	3-717-614-01	o	LABEL, C-LOCK OUT
1017	3-717-615-01	o	SPRING
1018	3-717-616-01	o	SPRING
1019	3-717-617-01	o	SHAFT, SC GUIDE
1020	3-717-618-01	o	GUIDE (LEFT), SC
1021	3-717-619-02	o	GUIDE (RIGHT), SC
1022	3-717-620-01	o	PLATE, OUT, C-LOCK
1023	3-717-621-03	o	PLATE, INDICATION, SC GUIDE
1024	4-312-237-00	o	CLIP, CABLE

Connector Panel Block

No.	Part No.	SP	Description
1101	A-8276-858-A	o	MOUNTED PCB, CP-225C **(UVW-1200/1200P)**
1101	A-8276-862-A	o	MOUNTED PCB, CP-225B **(UVW-1400/1400P)**
1102	A-8276-733-A	o	MOUNTED PCB, CP-226A **(UVW-1200/1200P)**
1102	A-8276-739-A	o	MOUNTED PCB, CP-226 **(UVW-1400/1400P)**
1102	A-8276-762-A	o	MOUNTED PCB, CP-226J **(UVW-1400 For J)**
1102	A-8276-763-A	o	MOUNTED PCB, CP-226AJ **(UVW-1200 For J)**
1103	A-8276-865-A	o	MOUNTED PCB, CP-239
1104 ⚠	1-413-889-11	s	SWITCHING REGULATOR (SOPS-1045) **(UVW1400/1200)**
1104 ⚠	1-413-925-12	s	SWITCHING REGULATOR (SOPS-1046) **(UVW1400P/1200P)**
1105	1-570-157-51	s	SWITCH, SLIDE
1108	1-573-582-11	s	CONNECTOR, BNC (RECEPTACLE)
1110	1-573-584-11	s	CONNECTOR, BNC (RECEPTACLE)
1113	1-573-590-12	s	CONNECTOR, (S) TERMINAL 4P
1115	1-691-273-11	s	JACK, PIN 1P
1116	1-750-785-11	s	CONNECTOR (XLR TYPE) 3P
1117	1-750-786-11	s	CONNECTOR (XLR TYPE) 3P
1119	1-750-890-11	s	CONNECTOR, D-SUB (ANGLE TYPE) 25P
1120	3-171-450-01	o	ADAPTOR, SW
1121	3-182-459-21	o	CONNECTOR, PANEL **(UVW-1200/1200P)**
1121	3-182-459-31	o	CONNECTOR, PANEL **(UVW-1400/1400P)**

18-26

CONNECTOR PANEL BLOCK

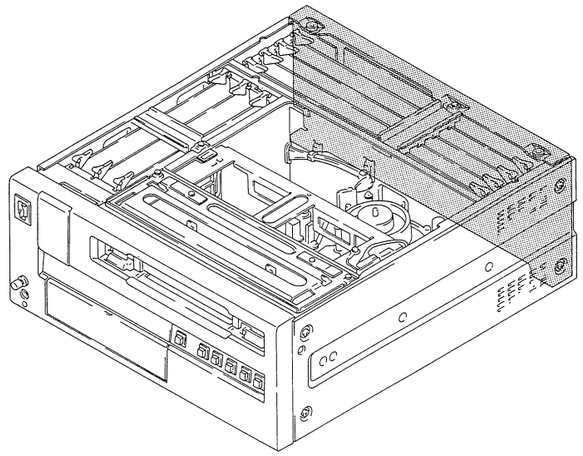

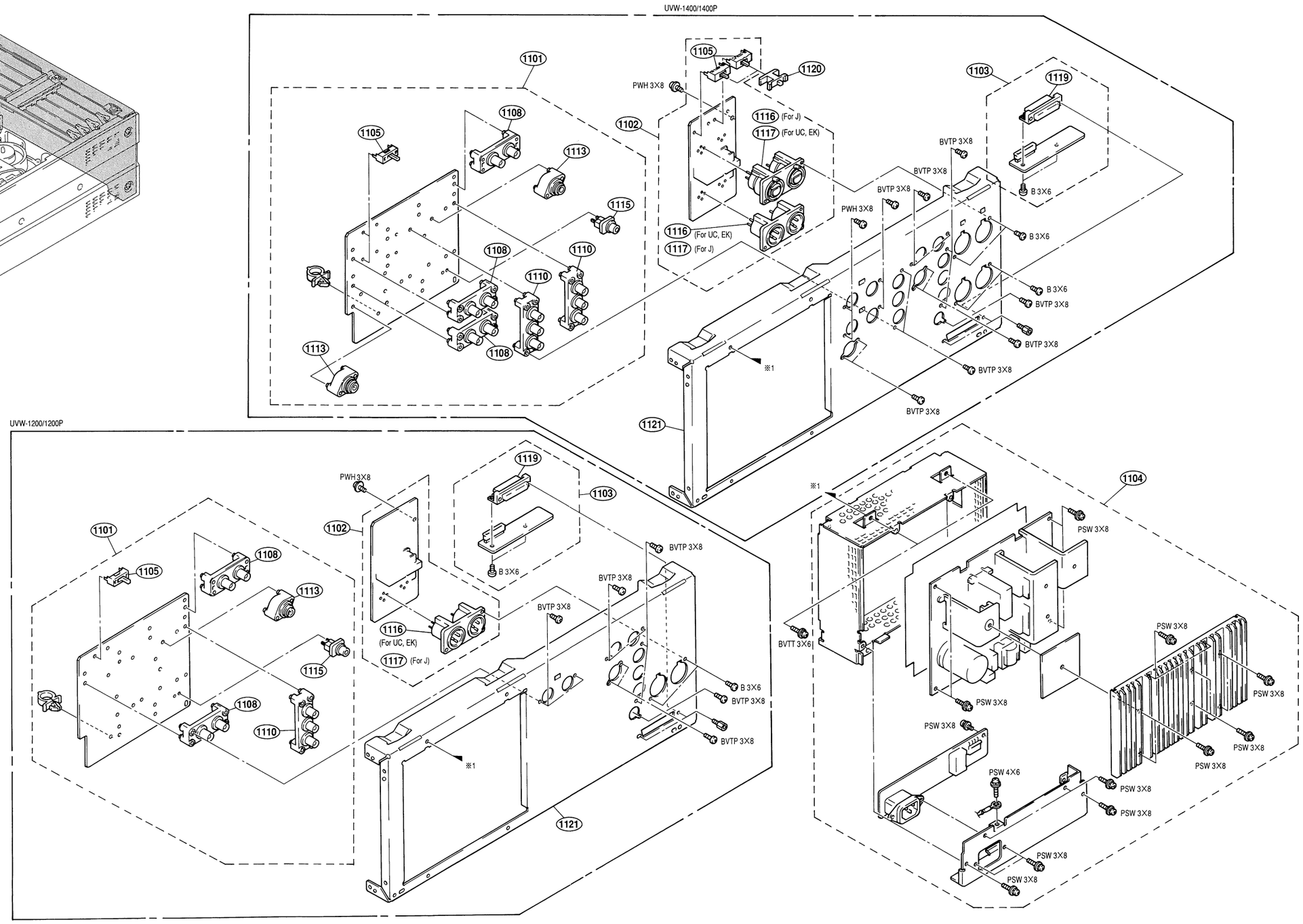

18-3. ELECTRICAL PARTS LIST

PARTS CHANGE INFORMATION

In this list * marked parts are design-changed. Applicable serial numbers are as follows;

UVW-1400/1400P

*1 marked parts are for serial No. up to 10420 (For J)
marked parts are for serial No. up to 10290 (For UC)
marked parts are for serial No. up to 10040 (For EK)

*2 marked parts are for serial No. 10421 and higher (For J)
marked parts are for serial No. 10291 and higher (For UC)
marked parts are for serial No. 10041 and higher (For EK)

*3 marked parts are for serial No. up to 10420 (For J)
marked parts are for serial No. up to 10390 (For UC)
marked parts are for serial No. up to 10470 (For EK)

*4 marked parts are for serial No. 10421 and higher (For J)
marked parts are for serial No. 10391 and higher (For UC)
marked parts are for serial No. 10471 and higher (For EK)

*5 marked parts are for serial No. up to 10420 (For J)
marked parts are for serial No. up to 10500 (For UC)
marked parts are for serial No. up to 10790 (For EK)

*6 marked parts are for serial No. 10421 and higher (For J)
marked parts are for serial No. 10501 and higher (For UC)
marked parts are for serial No. 10791 and higher (For EK)

*7 marked parts are for serial No. up to 10420 (For J)
marked parts are for serial No. up to 10680 (For UC)
marked parts are for serial No. up to 10990 (For EK)

*8 marked parts are for serial No. up to 10420 (For J)
marked parts are for serial No. up to 11050 (For UC)
marked parts are for serial No. up to 11490 (For EK)

*9 marked parts are for serial No. 10421 and higher (For J)
marked parts are for serial No. 11051 and higher (For UC)
marked parts are for serial No. 11491 and higher (For EK)

*10 marked parts are for serial No. up to 10420 (For J)
marked parts are for serial No. up to 11100 (For UC)
marked parts are for serial No. up to 11790 (For EK)

*11 and *12
marked parts are for serial No. 10421 and higher (For J)
marked parts are for serial No. 11101 and higher (For UC)
marked parts are for serial No. 11791 and higher (For EK)

*13 marked parts are for serial No. up to 10420 (For J)
marked parts are for serial No. up to 11100 (For UC)
marked parts are for serial No. up to 12090 (For EK)

*14 marked parts are for serial No. 10421 and higher (For J)
marked parts are for serial No. 11101 and higher (For UC)
marked parts are for serial No. 12091 and higher (For EK)

*15 marked parts are for serial No. 10421 and higher (For J)
marked parts are for serial No. 11101 and higher (For UC)
marked parts are for serial No. 12291 and higher (For EK)

*16 marked parts are for serial No. up to 10420 (For J)
marked parts are for serial No. up to 11140 (For UC)
marked parts are for serial No. up to 12400 (For EK)

*17 marked parts are for serial No. 10421 and higher (For J)
marked parts are for serial No. 11141 and higher (For UC)
marked parts are for serial No. 12401 and higher (For EK)

*18, *20, *22, *24, *26, *28, *30, *31, *33, *36 and *38
marked parts are for serial No. up to 10420 (For J)
marked parts are for serial No. up to 11140 (For UC)
marked parts are for serial No. up to 12450 (For EK)

*19, *21, *24, *25, *27, *29, *32, *34, *35, *37 and *39
marked parts are for serial No. 10421 and higher (For J)
marked parts are for serial No. 11141 and higher (For UC)
marked parts are for serial No. 12451 and higher (For EK)

*40 marked parts are for serial No. 10421 and higher (For J)
marked parts are for serial No. 10291 to 11050 (For UC)
marked parts are for serial No. 10041 to 11720 (For EK)

*41 marked parts are for serial No. 10421 and higher (For J)
marked parts are for serial No. 10501 to 11050 (For UC)
marked parts are for serial No. 10791 to 11490 (For EK)

*42 marked parts are for serial No. 10421 and higher (For J)
marked parts are for serial No. 11051 to 11100 (For UC)
marked parts are for serial No. 11491 to 11790 (For EK)

*43 marked parts are for serial No. 10421 and higher (For J)
marked parts are for serial No. 10391 to 11050 (For UC)
marked parts are for serial No. 10471 to 11490 (For EK)

*44 marked parts are for serial No. 10421 and higher (For J)
marked parts are for serial No. 11051 to 11140 (For UC)
marked parts are for serial No. 11491 to 12450 (For EK)

*45 marked parts are for serial No. 10421 and higher (For J)
marked parts are for serial No. 11141 and higher (For UC)
marked parts are for serial No. 12451 and higher (For EK)

*1 marked parts are for serial No. up to 10100 (For J)
marked parts are for serial No. up to 10250 (For UC)
marked parts are for serial No. up to 10040 (For EK)

*2 marked parts are for serial No. 10101 and higher(For J)
marked parts are for serial No. 10251 and higher(For UC)
marked parts are for serial No. 10041 and higher(For EK)

*3 marked parts are for serial No. up to 10200 (For J)
marked parts are for serial No. up to 10400 (For UC)
marked parts are for serial No. up to 10570 (For EK)

*4 marked parts are for serial No. 10201 and higher (For J)
marked parts are for serial No. 10401 and higher (For UC)
marked parts are for serial No. 10571 and higher (For EK)

*5 marked parts are for serial No. up to 10200 (For J)
marked parts are for serial No. up to 10720 (For UC)
marked parts are for serial No. up to 10970 (For EK)

*6 marked parts are for serial No. 10201 and higher (For J)
marked parts are for serial No. 10721 and higher (For UC)
marked parts are for serial No. 10971 and higher (For EK)

*7 marked parts are for serial No. up to 10200 (For J)
marked parts are for serial No. up to 10820 (For UC)
marked parts are for serial No. up to 11220 (For EK)

*8 marked parts are for serial No. up to 10350 (For J)
marked parts are for serial No. up to 11090 (For UC)
marked parts are for serial No. up to 11720 (For EK)

*9 marked parts are for serial No. 10351 and higher (For J)
marked parts are for serial No. 11091 and higher (For UC)
marked parts are for serial No. 11721 and higher (For EK)

*10 marked parts are for serial No. up to 10400 (For J)
marked parts are for serial No. up to 11230 (For UC)
marked parts are for serial No. up to 11870 (For EK)

*11 marked parts are for serial No. 10401 and higher (For J)
marked parts are for serial No. 11231 and higher (For UC)
marked parts are for serial No. 11871 and higher (For EK)

*12 marked parts are for serial No. 10401 and higher (For J)
marked parts are for serial No. 11231 and higher (For UC)
marked parts are for serial No. 12071 and higher (For EK)

*13 marked parts are for serial No. up to 10430 (For J)
marked parts are for serial No. up to 11230 (For UC)
marked parts are for serial No. up to 12220 (For EK)

*14 marked parts are for serial No. 10431 and higher (For J)
marked parts are for serial No. 11231 and higher (For UC)
marked parts are for serial No. 12221 and higher (For EK)

*15 marked parts are for serial No. 10431 and higher (For J)
marked parts are for serial No. 11231 and higher (For UC)
marked parts are for serial No. 12621 and higher (For EK)

*16 marked parts are for serial No. up to 10430 (For J)
marked parts are for serial No. up to 11230 (For UC)
marked parts are for serial No. up to 12620 (For EK)

*17 marked parts are for serial No. 10431 and higher (For J)
marked parts are for serial No. 11231 and higher (For UC)
marked parts are for serial No. 12621 and higher (For EK)

*18 marked parts are for serial No. up to 10460 (For J)
marked parts are for serial No. up to 11330 (For UC)
marked parts are for serial No. up to 12830 (For EK)

*19 marked parts are for serial No. 10461 and higher (For J)
marked parts are for serial No. 11331 and higher (For UC)
marked parts are for serial No. 12831 and higher (For EK)

*20 marked parts are for serial No. up to 10460 (For J)
marked parts are for serial No. up to 11330 (For UC)
marked parts are for serial No. up to 13070 (For EK)

*21 marked parts are for serial No. 10461 and higher (For J)
marked parts are for serial No. 11331 and higher (For UC)
marked parts are for serial No. 13071 and higher (For EK)

*22 marked parts are for serial No. up to 10490 (For J)
marked parts are for serial No. up to 11590 (For UC)
marked parts are for serial No. up to 13220 (For EK)

*23 marked parts are for serial No. 10491 and higher (For J)
marked parts are for serial No. 11591 and higher (For UC)
marked parts are for serial No. 13221 and higher (For EK)

*24 marked parts are for serial No. up to 10570 (For J)
marked parts are for serial No. up to 11660 (For UC)
marked parts are for serial No. up to 13400 (For EK)

*25 marked parts are for serial No. 10571 and higher (For J)
marked parts are for serial No. 11661 and higher (For UC)
marked parts are for serial No. 13401 and higher (For EK)

*26 marked parts are for serial No. up to 10600 (For J)
marked parts are for serial No. up to 11810 (For UC)
marked parts are for serial No. up to 13400 (For EK)

*27 marked parts are for serial No. 10601 and higher (For J)
marked parts are for serial No. 11811 and higher (For UC)
marked parts are for serial No. 13401 and higher (For EK)

*28 marked parts are for serial No. up to 10600 (For J)
marked parts are for serial No. up to 11810 (For UC)
marked parts are for serial No. up to 13600 (For EK)

*29 marked parts are for serial No. 10601 and higher (For J)
marked parts are for serial No. 11811 and higher (For UC)
marked parts are for serial No. 13601 and higher (For EK)

*30 marked parts are for serial No. up to 10620 (For J)
marked parts are for serial No. up to 11910 (For UC)
marked parts are for serial No. up to 13650 (For EK)

*31 marked parts are for serial No. up to 10660 (For J)
marked parts are for serial No. up to 12140 (For UC)
marked parts are for serial No. up to 14020 (For EK)

*32 marked parts are for serial No. 10661 and higher (For J)
marked parts are for serial No. 12141 and higher (For UC)
marked parts are for serial No. 14021 and higher (For EK)

*33 marked parts are for serial No. up to 10680 (For J)
marked parts are for serial No. up to 12240 (For UC)
marked parts are for serial No. up to 14120 (For EK)

*34 marked parts are for serial No. 10681 and higher (For J)
marked parts are for serial No. 12241 and higher (For UC)
marked parts are for serial No. 14121 and higher (For EK)

*35 marked parts are for serial No. 10781 and higher (For J)
marked parts are for serial No. 12481 and higher (For UC)
marked parts are for serial No. 14491 and higher (For EK)

*36 marked parts are for serial No. up to 10810 (For J)
marked parts are for serial No. up to 12640 (For UC)
marked parts are for serial No. up to 14840 (For EK)

*37 marked parts are for serial No. 10811 and higher (For J)
marked parts are for serial No. 12641 and higher (For UC)
marked parts are for serial No. 14841 and higher (For EK)

*38 marked parts are for serial No. up to 10840 (For J)
marked parts are for serial No. up to 12740 (For UC)
marked parts are for serial No. up to 15040 (For EK)

*39 marked parts are for serial No. 10841 and higher (For J)
marked parts are for serial No. 12741 and higher (For UC)
marked parts are for serial No. 15041 and higher (For EK)

*40 marked parts are for serial No. 10101 to 10350 (For J)
marked parts are for serial No. 10251 to 11090 (For UC)
marked parts are for serial No. 10041 to 11720 (For EK)

*41 marked parts are for serial No. 10201 to 10350 (For J)
marked parts are for serial No. 10721 to 11090 (For UC)
marked parts are for serial No. 10971 to 11720 (For EK)

*42 marked parts are for serial No. 10351 to 10400 (For J)
marked parts are for serial No. 11091 to 11230 (For UC)
marked parts are for serial No. 11721 to 12070 (For EK)

*43 marked parts are for serial No. 10201 to 10350 (For J)
marked parts are for serial No. 10401 to 11090 (For UC)
marked parts are for serial No. 10571 to 11720 (For EK)

*44 marked parts are for serial No. 10351 to 10490 (For J)
marked parts are for serial No. 11091 to 11590 (For UC)
marked parts are for serial No. 11721 to 13220 (For EK)

*45 marked parts are for serial No. 11661 to 10780 (For J)
marked parts are for serial No. 12141 to 12480 (For UC)
marked parts are for serial No. 14021 to 14490 (For EK)

AP-31B BOARD(for UVW-1400, NTSC)

Ref. No. or Q'ty	Part No.	SP	Description	
AP-31B board is used for UVW-1400.				
1pc	A-8275-575-A	o	MOUNTED CIRCUIT BOARD, AP-31B	
1pc	3-179-084-01	s	LEVER (R), PC BOARD	
1pc	3-179-085-01	s	LEVER (L), PC BOARD	
1pc	3-182-385-02	o	PLATE, SHIELD (S), CARD	
1pc	3-655-862-00	o	SPACER, INSULATING	
1pc	7-621-759-45	s	SCREW, +PSW2.6x6	
1pc	3-182-298-01	o	CASE, SHIELD (LID), AP (2)	
1pc	3-182-351-01	o	CASE, SHIELD, AP (2B)	
*C2	1-163-121-00	s	CERAMIC, CHIP 150pF 5% 50V	*8
	1-163-131-00	s	CERAMIC, CHIP 390pF 5% 50V	*9
*C3	1-163-243-11	s	CERAMIC, CHIP 47pF 5% 50V	*38
	1-163-121-00	s	CERAMIC, CHIP 150pF 5% 50V	*39
*C4	1-163-113-00	s	CERAMIC, CHIP 68pF 5% 50V	*38
	1-163-253-11	s	CERAMIC, CHIP 120pF 5% 50V	*39
*C6	1-163-127-00	s	CERAMIC, CHIP 270pF 5% 50V	*8
C7	1-130-485-00	s	MYLAR 0.015uF 5% 50V	
C8	1-126-933-11	s	ELECT 100uF 20% 16V	
C9	1-163-125-00	s	CERAMIC, CHIP 220pF 5% 50V	
C10	1-126-964-11	s	ELECT 10uF 20% 50V	
C11	1-128-551-11	s	ELECT 22uF 20% 50V	
C12	1-163-263-11	s	CERAMIC, CHIP 330pF 5% 50V	
C15	1-126-964-11	s	ELECT 10uF 20% 50V	
C16	1-128-551-11	s	ELECT 22uF 20% 50V	
C17	1-163-235-11	s	CERAMIC, CHIP 22pF 5% 50V	
C18	1-128-551-11	s	ELECT 22uF 20% 50V	
C19	1-163-235-11	s	CERAMIC, CHIP 22pF 5% 50V	
C20	1-130-498-00	s	MYLAR 0.18uF 5% 50V	
C21-26	1-130-487-00	s	MYLAR 0.022uF 5% 50V	
C27	1-163-243-11	s	CERAMIC, CHIP 47pF 5% 50V	
C28	1-163-017-00	s	CERAMIC, CHIP 0.0047uF 5% 50V	
C29	1-130-483-00	s	MYLAR 0.01uF 5% 50V	
C30	1-163-275-11	s	CERAMIC, CHIP 0.001uF 5% 50V	
C31	1-163-275-11	s	CERAMIC, CHIP 0.001uF 5% 50V	
C32	1-163-275-11	s	CERAMIC, CHIP 0.001uF 5% 50V	
C33	1-163-275-11	s	CERAMIC, CHIP 0.001uF 5% 50V	
C34	1-130-483-00	s	MYLAR 0.01uF 5% 50V	
C35	1-163-139-00	s	CERAMIC, CHIP 820pF 5% 50V	
C36	1-163-243-11	s	CERAMIC, CHIP 47pF 5% 50V	
C37	1-164-232-11	s	CERAMIC, CHIP 0.01uF 10% 100V	
C38	1-164-232-11	s	CERAMIC, CHIP 0.01uF 10% 100V	
C39	1-124-925-11	s	ELECT 2.2uF 20% 100V	
C40	1-164-004-11	s	CERAMIC, CHIP 0.1uF 10% 25V	
C41	1-107-498-11	s	FILM, CHIP 0.0022uF 2% 50V	
C42	1-107-498-11	s	FILM, CHIP 0.0022uF 2% 50V	
C43	1-107-499-11	s	FILM, CHIP 0.0039uF 2% 16V	
C44	1-131-345-00	s	TANTALUM 0.47uF 10% 35V	
C45	1-130-497-00	s	MYLAR 0.15uF 5% 50V	
C46	1-124-925-11	s	ELECT 2.2uF 20% 100V	
C47	1-104-553-11	s	FILM, CHIP 0.015uF 5% 16V	
C48	1-130-499-00	s	MYLAR 0.22uF 5% 50V	
C49	1-164-344-11	s	CERAMIC, CHIP 0.068uF 10% 25V	
C50	1-104-560-11	s	FILM, CHIP 0.056uF 5% 16V	
C51	1-124-925-11	s	ELECT 2.2uF 20% 100V	
C52	1-107-553-11	s	FILM, CHIP 0.0056uF 2% 16V	
C53	1-104-551-11	s	FILM, CHIP 0.01uF 5% 16V	

(AP-31B BOARD(for UVW-1400, NTSC))

Ref. No. or Q'ty	Part No.	SP	Description	
C54	1-130-478-00	s	MYLAR 0.0039uF 5% 50V	
C55	1-130-478-00	s	MYLAR 0.0039uF 5% 50V	
C56	1-163-251-11	s	CERAMIC, CHIP 100pF 5% 50V	
C57	1-126-947-11	s	ELECT 47uF 20% 35V	
C58	1-163-263-11	s	CERAMIC, CHIP 330pF 5% 50V	
C59	1-163-235-11	s	CERAMIC, CHIP 22pF 5% 50V	
C60	1-126-964-11	s	ELECT 10uF 20% 50V	
C61	1-126-964-11	s	ELECT 10uF 20% 50V	
C62	1-126-926-11	s	ELECT 1000uF 20% 10V	
C63	1-126-926-11	s	ELECT 1000uF 20% 10V	
C64	1-126-926-11	s	ELECT 1000uF 20% 10V	
C65	1-164-004-11	s	CERAMIC, CHIP 0.1uF 10% 25V	
C66	1-126-926-11	s	ELECT 1000uF 20% 10V	
C67	1-126-947-11	s	ELECT 47uF 20% 35V	
C68	1-124-903-11	s	ELECT 1uF 20% 50V	
C69	1-163-251-11	s	CERAMIC, CHIP 100pF 5% 50V	
C70	1-126-947-11	s	ELECT 47uF 20% 35V	
C71	1-163-235-11	s	CERAMIC, CHIP 22pF 5% 50V	
C72	1-163-809-11	s	CERAMIC, CHIP 0.047uF 10% 25V	
C73	1-130-491-00	s	MYLAR 0.047uF 5% 50V	
C74	1-130-491-00	s	MYLAR 0.047uF 5% 50V	
C75	1-130-491-00	s	MYLAR 0.047uF 5% 50V	
C76	1-130-491-00	s	MYLAR 0.047uF 5% 50V	
C77	1-163-251-11	s	CERAMIC, CHIP 100pF 5% 50V	
C78	1-126-964-11	s	ELECT 10uF 20% 50V	
C79	1-126-964-11	s	ELECT 10uF 20% 50V	
C80	1-126-964-11	s	ELECT 10uF 20% 50V	
C81	1-130-483-00	s	MYLAR 0.01uF 5% 50V	
C82	1-126-926-11	s	ELECT 1000uF 20% 10V	
C83	1-126-926-11	s	ELECT 1000uF 20% 10V	
C84	1-124-925-11	s	ELECT 2.2uF 20% 100V	
C85	1-131-352-00	s	TANTALUM 6.8uF 10% 35V	
C87	1-126-964-11	s	ELECT 10uF 20% 50V	
*C88	1-126-964-11	s	ELECT 10uF 20% 50V	*8
*C202	1-163-121-00	s	CERAMIC, CHIP 150pF 5% 50V	*8
	1-163-131-00	s	CERAMIC, CHIP 390pF 5% 50V	*9
*C203	1-163-243-11	s	CERAMIC, CHIP 47pF 5% 50V	*38
	1-163-121-00	s	CERAMIC, CHIP 150pF 5% 50V	*39
*C204	1-163-113-00	s	CERAMIC, CHIP 68pF 5% 50V	*38
	1-163-253-11	s	CERAMIC, CHIP 120pF 5% 50V	*39
*C206	1-163-127-00	s	CERAMIC, CHIP 270pF 5% 50V	*8
C207	1-130-485-00	s	MYLAR 0.015uF 5% 50V	
C208	1-126-933-11	s	ELECT 100uF 20% 16V	
C209	1-163-125-00	s	CERAMIC, CHIP 220pF 5% 50V	
C210	1-126-964-11	s	ELECT 10uF 20% 50V	
C211	1-128-551-11	s	ELECT 22uF 20% 50V	
C212	1-163-263-11	s	CERAMIC, CHIP 330pF 5% 50V	
C215	1-126-964-11	s	ELECT 10uF 20% 50V	
C216	1-128-551-11	s	ELECT 22uF 20% 50V	
C217	1-163-235-11	s	CERAMIC, CHIP 22pF 5% 50V	
C218	1-128-551-11	s	ELECT 22uF 20% 50V	
C219	1-163-235-11	s	CERAMIC, CHIP 22pF 5% 50V	
C220	1-130-498-00	s	MYLAR 0.18uF 5% 50V	
C221-226	1-130-487-00	s	MYLAR 0.022uF 5% 50V	
C227	1-163-243-11	s	CERAMIC, CHIP 47pF 5% 50V	
C228	1-163-017-00	s	CERAMIC, CHIP 0.0047uF 5% 50V	
C229	1-130-483-00	s	MYLAR 0.01uF 5% 50V	

Note: In this list * marked parts are design changed.
Refer to pages 18-29 to 18-31 for applicable serial numbers.

(AP-31B BOARD(for UVW-1400, NTSC))

Ref. No. or Q'ty	Part No.	SP	Description	
C230	1-163-275-11	s	CERAMIC, CHIP 0.001uF 5% 50V	
C231	1-163-275-11	s	CERAMIC, CHIP 0.001uF 5% 50V	
C232	1-163-275-11	s	CERAMIC, CHIP 0.001uF 5% 50V	
C233	1-163-275-11	s	CERAMIC, CHIP 0.001uF 5% 50V	
C234	1-130-483-00	s	MYLAR 0.01uF 5% 50V	
C235	1-163-139-00	s	CERAMIC, CHIP 820pF 5% 50V	
C236	1-163-243-11	s	CERAMIC, CHIP 47pF 5% 50V	
C237	1-124-925-11	s	ELECT 2.2uF 20% 100V	
C238	1-107-498-11	s	FILM, CHIP 0.0022uF 2% 50V	
C239	1-107-498-11	s	FILM, CHIP 0.0022uF 2% 50V	
C240	1-107-499-11	s	FILM, CHIP 0.0039uF 2% 16V	
C241	1-131-345-00	s	TANTALUM 0.47uF 10% 35V	
C242	1-130-497-00	s	MYLAR 0.15uF 5% 50V	
C243	1-124-925-11	s	ELECT 2.2uF 20% 100V	
C244	1-104-553-11	s	FILM, CHIP 0.015uF 5% 16V	
C245	1-130-499-00	s	MYLAR 0.22uF 5% 50V	
C246	1-164-344-11	s	CERAMIC, CHIP 0.068uF 10% 25V	
C247	1-104-560-11	s	FILM, CHIP 0.056uF 5% 16V	
C248	1-124-925-11	s	ELECT 2.2uF 20% 100V	
C249	1-107-553-11	s	FILM, CHIP 0.0056uF 2% 16V	
C250	1-104-551-11	s	FILM, CHIP 0.01uF 5% 16V	
C251	1-130-478-00	s	MYLAR 0.0039uF 5% 50V	
C252	1-130-478-00	s	MYLAR 0.0039uF 5% 50V	
C253	1-163-251-11	s	CERAMIC, CHIP 100pF 5% 50V	
C254	1-126-947-11	s	ELECT 47uF 20% 35V	
C255	1-163-263-11	s	CERAMIC, CHIP 330pF 5% 50V	
C256	1-163-235-11	s	CERAMIC, CHIP 22pF 5% 50V	
C257	1-126-964-11	s	ELECT 10uF 20% 50V	
C258	1-126-964-11	s	ELECT 10uF 20% 50V	
C259	1-126-926-11	s	ELECT 1000uF 20% 10V	
C260	1-126-926-11	s	ELECT 1000uF 20% 10V	
C261	1-126-926-11	s	ELECT 1000uF 20% 10V	
C262	1-164-004-11	s	CERAMIC, CHIP 0.1uF 10% 25V	
C263	1-126-926-11	s	ELECT 1000uF 20% 10V	
C264	1-126-947-11	s	ELECT 47uF 20% 35V	
C265	1-124-903-11	s	ELECT 1uF 20% 50V	
C266	1-163-251-11	s	CERAMIC, CHIP 100pF 5% 50V	
C267	1-126-947-11	s	ELECT 47uF 20% 35V	
C268	1-163-235-11	s	CERAMIC, CHIP 22pF 5% 50V	
C269	1-163-809-11	s	CERAMIC, CHIP 0.047uF 10% 25V	
C270	1-124-925-11	s	ELECT 2.2uF 20% 100V	
C271	1-131-352-00	s	TANTALUM 6.8uF 10% 35V	
*C272	1-126-964-11	s	ELECT 10uF 20% 50V	*8
C278	1-126-964-11	s	ELECT 10uF 20% 50V	
C279	1-126-964-11	s	ELECT 10uF 20% 50V	
C280	1-126-964-11	s	ELECT 10uF 20% 50V	
C281	1-130-483-00	s	MYLAR 0.01uF 5% 50V	
C282	1-126-926-11	s	ELECT 1000uF 20% 10V	
C283	1-126-926-11	s	ELECT 1000uF 20% 10V	
C401	1-163-033-91	s	CERAMIC, CHIP 0.022uF 50V	
C402	1-126-933-11	s	ELECT 100uF 20% 16V	
C403	1-163-989-11	s	CERAMIC, CHIP 0.033uF 10% 25V	
C404	1-164-004-11	s	CERAMIC, CHIP 0.1uF 10% 25V	
C405	1-164-232-11	s	CERAMIC, CHIP 0.01uF 10% 100V	
C406	1-164-232-11	s	CERAMIC, CHIP 0.01uF 10% 100V	
C408	1-126-964-11	s	ELECT 10uF 20% 50V	
C409	1-163-239-11	s	CERAMIC, CHIP 33pF 5% 50V	
C410	1-164-004-11	s	CERAMIC, CHIP 0.1uF 10% 25V	
C411	1-163-989-11	s	CERAMIC, CHIP 0.033uF 10% 25V	

(AP-31B BOARD(for UVW-1400, NTSC))

Ref. No. or Q'ty	Part No.	SP	Description	
C412	1-126-964-11	s	ELECT 10uF 20% 50V	
C413	1-126-964-11	s	ELECT 10uF 20% 50V	
C414	1-126-964-11	s	ELECT 10uF 20% 50V	
C415	1-163-033-91	s	CERAMIC, CHIP 0.022uF 50V	
C416	1-163-033-91	s	CERAMIC, CHIP 0.022uF 50V	
C417	1-126-933-11	s	ELECT 100uF 20% 16V	
C418	1-126-933-11	s	ELECT 100uF 20% 16V	
C419	1-126-964-11	s	ELECT 10uF 20% 50V	
C420	1-163-033-91	s	CERAMIC, CHIP 0.022uF 50V	
C421	1-163-033-91	s	CERAMIC, CHIP 0.022uF 50V	
C422	1-126-933-11	s	ELECT 100uF 20% 16V	
C423	1-126-933-11	s	ELECT 100uF 20% 16V	
C424	1-126-933-11	s	ELECT 100uF 20% 16V	
C425	1-126-933-11	s	ELECT 100uF 20% 16V	
C426	1-163-033-91	s	CERAMIC, CHIP 0.022uF 50V	
C427	1-163-033-91	s	CERAMIC, CHIP 0.022uF 50V	
C428	1-163-989-11	s	CERAMIC, CHIP 0.033uF 10% 25V	
C429	1-161-021-11	s	CERAMIC 0.047uF 10% 25V	
C430	1-161-021-11	s	CERAMIC 0.047uF 10% 25V	
C500	1-163-125-00	s	CERAMIC, CHIP 220pF 5% 50V	
*C501	1-102-114-00	s	CERAMIC 470pF 10% 50V	*8
	1-163-133-00	s	CERAMIC, CHIP 470pF 5% 50V	*9
C600	1-163-809-11	s	CERAMIC, CHIP 0.047uF 10% 25V	
C601	1-163-809-11	s	CERAMIC, CHIP 0.047uF 10% 25V	
CN1	1-506-468-11	s	CONNECTOR 3P, MALE	
CN2	1-506-468-11	s	CONNECTOR 3P, MALE	
CN3	1-564-002-11	s	CONNECTOR 3P, MALE	
CN111	1-573-600-21	s	CONNECTOR, PHEC 100P, MALE	
D1	8-719-941-23	s	DIODE DA204U	
D2	8-719-941-23	s	DIODE DA204U	
D3	8-719-941-23	s	DIODE DA204U	
D5	8-719-941-23	s	DIODE DA204U	
D6	8-719-123-85	s	DIODE 1SS304	
D7	8-719-941-23	s	DIODE DA204U	
D8	8-719-123-85	s	DIODE 1SS304	
D10	8-719-123-85	s	DIODE 1SS304	
D11	8-719-123-85	s	DIODE 1SS304	
D12	8-719-123-85	s	DIODE 1SS304	
D13	8-719-123-85	s	DIODE 1SS304	
D15	8-719-123-85	s	DIODE 1SS304	
D16	8-719-123-85	s	DIODE 1SS304	
D17	8-719-941-23	s	DIODE DA204U	
D18	8-719-911-19	s	DIODE 1SS119	
D201	8-719-941-23	s	DIODE DA204U	
D202	8-719-941-23	s	DIODE DA204U	
D203	8-719-941-23	s	DIODE DA204U	
D204	8-719-941-23	s	DIODE DA204U	
D205	8-719-123-85	s	DIODE 1SS304	
D206	8-719-941-23	s	DIODE DA204U	
D207	8-719-123-85	s	DIODE 1SS304	
D209	8-719-123-85	s	DIODE 1SS304	
D210	8-719-941-23	s	DIODE DA204U	
D211	8-719-911-19	s	DIODE 1SS119	
D401	8-719-941-23	s	DIODE DA204U	
D403	8-719-941-23	s	DIODE DA204U	
*D500	8-719-110-41	s	DIODE RD15ES-B2	*8
	8-719-106-88	s	DIODE RD15M-B1	*9

Note: In this list * marked parts are design changed.
Refer to pages 18-29 to 18-31 for applicable serial numbers.

(AP-31B BOARD(for UVW-1400, NTSC))

Ref. No. or Q'ty	Part No.	SP	Description
IC1-7	8-759-701-25	s	IC NJM2068D-D
IC8	8-752-018-80	s	IC CX20188
IC9	8-759-705-58	s	IC NJM4558D-D
IC10	8-759-705-58	s	IC NJM4558D-D
IC11	8-759-145-57	s	IC UPC4557C
IC12	8-759-917-18	s	IC SN74HCU04AN
IC13	8-759-917-18	s	IC SN74HCU04AN
IC14	8-759-145-57	s	IC UPC4557C
IC15	8-759-705-58	s	IC NJM4558D-D
IC201	8-759-701-25	s	IC NJM2068D-D
IC202	8-759-701-25	s	IC NJM2068D-D
IC203	8-759-701-25	s	IC NJM2068D-D
IC204	8-759-701-25	s	IC NJM2068D-D
IC205	8-759-705-58	s	IC NJM4558D-D
IC206	8-759-705-58	s	IC NJM4558D-D
IC207	8-759-705-58	s	IC NJM4558D-D
IC208	8-759-705-58	s	IC NJM4558D-D
IC209	8-759-705-58	s	IC NJM4558D-D
IC210	8-759-145-57	s	IC UPC4557C
IC211	8-759-705-58	s	IC NJM4558D-D
IC401	8-759-701-25	s	IC NJM2068D-D
IC402	8-759-729-03	s	IC NJM2903D
IC405	8-759-172-41	s	IC L78M09T-TL
IC406	8-759-173-37	s	IC L79M09T-TL
IC407	8-759-635-83	s	IC M51957BFP
IC408	8-759-172-41	s	IC L78M09T-TL
IC409	8-759-173-37	s	IC L79M09T-TL
IC410	8-759-701-25	s	IC NJM2068D-D
*JW61	1-217-666-11	s	RES 0
*L1	1-410-068-11	s	INDUCTOR 5.60mH
L2	1-408-617-31	s	INDUCTOR 150uH
*L201	1-410-068-11	s	INDUCTOR 5.60mH
L202	1-408-617-31	s	INDUCTOR 150uH
L401	1-410-470-11	s	INDUCTOR 10uH
L402	1-410-470-11	s	INDUCTOR 10uH
PS1	⚠ 1-532-727-11	s	LINK, IC 0.25A
PS2	⚠ 1-532-727-11	s	LINK, IC 0.25A
Q1	8-729-209-06	s	TRANSISTOR 2SC4213-A
Q2	8-729-803-89	s	TRANSISTOR 2SC3332-T
Q3	8-729-803-89	s	TRANSISTOR 2SC3332-T
Q4	8-729-209-06	s	TRANSISTOR 2SC4213-A
Q5	8-729-209-06	s	TRANSISTOR 2SC4213-A
Q6	8-729-209-06	s	TRANSISTOR 2SC4213-A
Q7	8-729-209-06	s	TRANSISTOR 2SC4213-A
Q8	8-729-140-63	s	TRANSISTOR 2SA1611-M5M6
Q9	8-729-109-44	s	TRANSISTOR 2SK94
Q10	8-729-203-30	s	TRANSISTOR 2SJ106Y
Q11	8-729-905-18	s	TRANSISTOR DTC144EU
Q12	8-729-905-12	s	TRANSISTOR DTA144EU
Q13	8-729-422-44	s	TRANSISTOR 2SK663
Q14	8-729-209-06	s	TRANSISTOR 2SC4213-A
Q15	8-729-209-06	s	TRANSISTOR 2SC4213-A
Q16	8-729-140-63	s	TRANSISTOR 2SA1611-M5M6
Q17	8-729-422-44	s	TRANSISTOR 2SK663
Q18	8-729-423-93	s	TRANSISTOR 2SD2136-R(TA)
Q19	8-729-022-00	s	TRANSISTOR 2SB1416-R(TA)
Q20	8-729-021-98	s	TRANSISTOR 2SJ226-AZ

*9
*8
*8

(AP-31B BOARD(for UVW-1400, NTSC))

Ref. No. or Q'ty	Part No.	SP	Description
Q21	8-729-021-98	s	TRANSISTOR 2SJ226-AZ
Q22	8-729-117-32	s	TRANSISTOR 2SC4177
Q23	8-729-117-32	s	TRANSISTOR 2SC4177
Q25	8-729-140-93	s	TRANSISTOR 2SB733-34
Q26	8-729-209-06	s	TRANSISTOR 2SC4213-A
Q27	8-729-209-06	s	TRANSISTOR 2SC4213-A
Q28	8-729-804-09	s	TRANSISTOR 2SA1319-T
Q29	8-729-804-09	s	TRANSISTOR 2SA1319-T
Q30	8-729-140-93	s	TRANSISTOR 2SB733-34
Q34	8-729-905-18	s	TRANSISTOR DTC144EU
Q35	8-729-905-12	s	TRANSISTOR DTA144EU
Q36	8-729-422-44	s	TRANSISTOR 2SK663
Q201	8-729-209-06	s	TRANSISTOR 2SC4213-A
Q202	8-729-803-89	s	TRANSISTOR 2SC3332-T
Q203	8-729-803-89	s	TRANSISTOR 2SC3332-T
Q204	8-729-209-06	s	TRANSISTOR 2SC4213-A
Q205	8-729-209-06	s	TRANSISTOR 2SC4213-A
Q206	8-729-209-06	s	TRANSISTOR 2SC4213-A
Q207	8-729-209-06	s	TRANSISTOR 2SC4213-A
Q208	8-729-140-63	s	TRANSISTOR 2SA1611-M5M6
Q209	8-729-109-44	s	TRANSISTOR 2SK94
Q210	8-729-203-30	s	TRANSISTOR 2SJ106Y
Q211	8-729-422-44	s	TRANSISTOR 2SK663
Q212	8-729-209-06	s	TRANSISTOR 2SC4213-A
Q213	8-729-209-06	s	TRANSISTOR 2SC4213-A
Q214	8-729-140-63	s	TRANSISTOR 2SA1611-M5M6
Q215	8-729-422-44	s	TRANSISTOR 2SK663
Q216	8-729-423-93	s	TRANSISTOR 2SD2136-R(TA)
Q217	8-729-022-00	s	TRANSISTOR 2SB1416-R(TA)
Q218	8-729-021-98	s	TRANSISTOR 2SJ226-AZ
Q219	8-729-021-98	s	TRANSISTOR 2SJ226-AZ
Q220	8-729-117-32	s	TRANSISTOR 2SC4177
Q221	8-729-117-32	s	TRANSISTOR 2SC4177
Q223	8-729-140-93	s	TRANSISTOR 2SB733-34
Q224	8-729-905-18	s	TRANSISTOR DTC144EU
Q225	8-729-905-12	s	TRANSISTOR DTA144EU
Q226	8-729-422-44	s	TRANSISTOR 2SK663
Q401	8-729-209-06	s	TRANSISTOR 2SC4213-A
Q402	8-729-209-06	s	TRANSISTOR 2SC4213-A
Q403	8-729-209-06	s	TRANSISTOR 2SC4213-A
R1	1-216-603-11	s	METAL, CHIP 10 0.5% 1/10W
R2	1-216-049-91	s	METAL, CHIP 1k 5% 1/10W
*R3	1-216-057-00	s	METAL, CHIP 2.2k 5% 1/10W
	1-216-051-00	s	METAL, CHIP 1.2k 5% 1/10W
*R4	1-216-057-00	s	METAL, CHIP 2.2k 5% 1/10W
	1-216-051-00	s	METAL, CHIP 1.2k 5% 1/10W
R5	1-216-097-91	s	METAL, CHIP 100k 5% 1/10W
*R6	1-216-097-00	s	METAL, CHIP 100k 5% 1/10W
R8	1-216-105-91	s	METAL, CHIP 220k 5% 1/10W
R9	1-216-626-11	s	METAL, CHIP 91 0.5% 1/10W
R10	1-216-651-11	s	METAL, CHIP 1k 0.5% 1/10W
R11	1-216-073-00	s	METAL, CHIP 10k 5% 1/10W
R12	1-216-073-00	s	METAL, CHIP 10k 5% 1/10W
R13	1-216-659-11	s	METAL, CHIP 2.2k 0.5% 1/10W
R14	1-216-049-91	s	METAL, CHIP 1k 5% 1/10W
R16	1-216-009-00	s	METAL, CHIP 22 5% 1/10W
R17	1-216-073-00	s	METAL, CHIP 10k 5% 1/10W
R19-23	1-216-073-00	s	METAL, CHIP 10k 5% 1/10W

*16
*17
*16
*17
*8

Note: In this list * marked parts are design changed.
Refer to pages 18-29 to 18-31 for applicable serial numbers.

(AP-31B BOARD(for UVW-1400, NTSC))

Ref. No. or Q'ty	Part No.	SP	Description
R24	1-216-049-91	s	METAL, CHIP 1k 5% 1/10W
R25	1-216-073-00	s	METAL, CHIP 10k 5% 1/10W
R26	1-216-073-00	s	METAL, CHIP 10k 5% 1/10W
R27	1-216-085-00	s	METAL, CHIP 33k 5% 1/10W
R28	1-216-085-00	s	METAL, CHIP 33k 5% 1/10W
R30	1-208-806-11	s	METAL, CHIP 10k 0.5% 1/10W
R31	1-216-041-00	s	METAL, CHIP 470 5% 1/10W
R32	1-216-642-11	s	METAL, CHIP 430 0.5% 1/10W
R33	1-208-806-11	s	METAL, CHIP 10k 0.5% 1/10W
R34	1-208-822-11	s	METAL, CHIP 47k 0.5% 1/10W
R35	1-208-806-11	s	METAL, CHIP 10k 0.5% 1/10W
R36	1-208-814-11	s	METAL, CHIP 22k 0.5% 1/10W
R37	1-215-473-00	s	METAL 150k 1% 1/6W
R38	1-215-484-00	s	METAL 430k 1% 1/6W
R39	1-215-484-00	s	METAL 430k 1% 1/6W
R40	1-208-812-11	s	METAL, CHIP 18k 0.5% 1/10W
R41	1-208-810-11	s	METAL, CHIP 15k 0.5% 1/10W
R42	1-216-695-11	s	METAL, CHIP 68k 0.5% 1/10W
R43	1-215-485-00	s	METAL 470k 1% 1/6W
R44	1-215-493-00	s	METAL 1M 1% 1/6W
R45	1-215-464-00	s	METAL 62k 1% 1/6W
R46	1-208-812-11	s	METAL, CHIP 18k 0.5% 1/10W
R47	1-208-814-11	s	METAL, CHIP 22k 0.5% 1/10W
R48	1-216-089-91	s	METAL, CHIP 47k 5% 1/10W
R49	1-216-071-00	s	METAL, CHIP 8.2k 5% 1/10W
R50	1-216-081-00	s	METAL, CHIP 22k 5% 1/10W
R51	1-216-121-91	s	METAL, CHIP 1M 5% 1/10W
R52	1-216-121-91	s	METAL, CHIP 1M 5% 1/10W
R53	1-216-121-91	s	METAL, CHIP 1M 5% 1/10W
R54	1-216-121-91	s	METAL, CHIP 1M 5% 1/10W
R56	1-216-009-00	s	METAL, CHIP 22 5% 1/10W
R57	1-208-822-11	s	METAL, CHIP 47k 0.5% 1/10W
R58	1-208-774-11	s	METAL, CHIP 470 5% 1/10W
R59	1-216-622-11	s	METAL, CHIP 62 0.5% 1/10W
R60	1-216-678-11	s	METAL, CHIP 13k 0.5% 1/10W
R61	1-216-673-11	s	METAL, CHIP 8.2k 0.5% 1/10W
R62	1-216-652-11	s	METAL, CHIP 1.1k 0.5% 1/10W
R63	1-216-622-11	s	METAL, CHIP 62 0.5% 1/10W
R64	1-208-784-11	s	METAL, CHIP 1.2k 0.5% 1/10W
R65	1-216-676-11	s	METAL, CHIP 11k 0.5% 1/10W
R66	1-216-677-11	s	METAL, CHIP 12k 0.5% 1/10W
R67	1-208-785-11	s	METAL, CHIP 1.3k 0.5% 1/10W
R68	1-215-493-00	s	METAL 1M 1% 1/6W
R69	1-216-666-11	s	METAL, CHIP 4.3k 0.5% 1/10W
R70	1-208-822-11	s	METAL, CHIP 47k 0.5% 1/10W
R71	1-208-806-11	s	METAL, CHIP 10k 0.5% 1/10W
R72	1-216-073-00	s	METAL, CHIP 10k 5% 1/10W
R73	1-216-081-00	s	METAL, CHIP 22k 5% 1/10W
R74	1-216-049-91	s	METAL, CHIP 1k 5% 1/10W
R75	1-216-081-00	s	METAL, CHIP 22k 5% 1/10W
R76	1-216-081-00	s	METAL, CHIP 22k 5% 1/10W
R77	1-216-699-11	s	METAL, CHIP 100k 0.5% 1/10W
R78	1-208-817-11	s	METAL, CHIP 30k 0.5% 1/10W
R79	1-216-081-00	s	METAL, CHIP 22k 5% 1/10W
R80	1-216-049-91	s	METAL, CHIP 1k 5% 1/10W
R81	1-208-810-11	s	METAL, CHIP 15k 0.5% 1/10W
R82	1-216-659-11	s	METAL, CHIP 2.2k 0.5% 1/10W
R83	1-208-789-11	s	METAL, CHIP 2k 0.5% 1/10W
R84	1-216-677-11	s	METAL, CHIP 12k 0.5% 1/10W

(AP-31B BOARD(for UVW-1400, NTSC))

Ref. No. or Q'ty	Part No.	SP	Description
R85	1-216-645-11	s	METAL, CHIP 560 0.5% 1/10W
R86	1-216-121-91	s	METAL, CHIP 1M 5% 1/10W
R87	1-208-814-11	s	METAL, CHIP 22k 0.5% 1/10W
R88	1-208-803-11	s	METAL, CHIP 7.5k 0.5% 1/10W
R89	1-216-045-00	s	METAL, CHIP 680 5% 1/10W
R90	1-216-674-11	s	METAL, CHIP 9.1k 0.5% 1/10W
R91	1-208-812-11	s	METAL, CHIP 18k 0.5% 1/10W
R92	1-216-657-11	s	METAL, CHIP 1.8k 0.5% 1/10W
R93	1-216-121-91	s	METAL, CHIP 1M 5% 1/10W
R94	1-216-121-91	s	METAL, CHIP 1M 5% 1/10W
R95	1-208-822-11	s	METAL, CHIP 47k 0.5% 1/10W
R96	1-208-814-11	s	METAL, CHIP 22k 0.5% 1/10W
R97	1-216-659-11	s	METAL, CHIP 2.2k 0.5% 1/10W
R98	1-216-659-11	s	METAL, CHIP 2.2k 0.5% 1/10W
R99	1-216-073-00	s	METAL, CHIP 10k 5% 1/10W
R100	1-216-097-91	s	METAL, CHIP 100k 5% 1/10W
R101	1-216-073-00	s	METAL, CHIP 10k 5% 1/10W
R102	1-216-121-91	s	METAL, CHIP 1M 5% 1/10W
R103	1-216-073-00	s	METAL, CHIP 10k 5% 1/10W
R104	1-216-073-00	s	METAL, CHIP 10k 5% 1/10W
R105	1-216-121-91	s	METAL, CHIP 1M 5% 1/10W
R106	1-216-069-00	s	METAL, CHIP 6.8k 5% 1/10W
R107	1-216-073-00	s	METAL, CHIP 10k 5% 1/10W
R108	1-208-799-11	s	METAL, CHIP 5.1k 0.5% 1/10W
R109	1-216-663-11	s	METAL, CHIP 3.3k 0.5% 1/10W
R110	1-216-650-11	s	METAL, CHIP 910 0.5% 1/10W
R111	1-216-663-11	s	METAL, CHIP 3.3k 0.5% 1/10W
R112	1-216-073-00	s	METAL, CHIP 10k 5% 1/10W
R113	1-216-667-11	s	METAL, CHIP 4.7k 0.5% 1/10W
R114	1-216-033-00	s	METAL, CHIP 220 5% 1/10W
R115	1-216-067-00	s	METAL, CHIP 5.6k 5% 1/10W
R116	1-216-067-00	s	METAL, CHIP 5.6k 5% 1/10W
R117	1-208-810-11	s	METAL, CHIP 15k 0.5% 1/10W
R118	1-247-807-31	s	CARBON 100 5% 1/4W
R119	⚠ 1-216-399-00	s	WIREWOUND 6.8 10% 3W
R120	⚠ 1-216-399-00	s	WIREWOUND 6.8 10% 3W
R121	1-247-807-31	s	CARBON 100 5% 1/4W
R122	1-216-121-91	s	METAL, CHIP 1M 5% 1/10W
R123	1-249-389-11	s	CARBON 4.7 5% 1/4W
R124	1-216-121-91	s	METAL, CHIP 1M 5% 1/10W
R125	1-216-057-00	s	METAL, CHIP 2.2k 5% 1/10W
R126	1-216-075-00	s	METAL, CHIP 12k 5% 1/10W
R127	1-216-081-00	s	METAL, CHIP 22k 5% 1/10W
R128	1-216-025-91	s	METAL, CHIP 100 5% 1/10W
R129	1-216-121-91	s	METAL, CHIP 1M 5% 1/10W
R130	1-216-033-00	s	METAL, CHIP 220 5% 1/10W
R131	1-216-065-00	s	METAL, CHIP 4.7k 5% 1/10W
R132	1-216-081-00	s	METAL, CHIP 22k 5% 1/10W
R133	1-216-095-00	s	METAL, CHIP 82k 5% 1/10W
R134	1-216-676-11	s	METAL, CHIP 11k 0.5% 1/10W
R135	1-216-057-00	s	METAL, CHIP 2.2k 5% 1/10W
R136	1-216-678-11	s	METAL, CHIP 13k 0.5% 1/10W
R137	1-216-025-91	s	METAL, CHIP 100 5% 1/10W
R138	1-216-073-00	s	METAL, CHIP 10k 5% 1/10W
R139	1-216-073-00	s	METAL, CHIP 10k 5% 1/10W
R140	1-216-073-00	s	METAL, CHIP 10k 5% 1/10W
R141	1-216-684-91	s	METAL, CHIP 24k 0.5% 1/10W
R142	1-216-025-91	s	METAL, CHIP 100 5% 1/10W
R143	1-216-073-00	s	METAL, CHIP 10k 5% 1/10W

Note: In this list * marked parts are design changed.
Refer to pages 18-29 to 18-31 for applicable serial numbers.

(AP-31B BOARD(for UVW-1400, NTSC))

Ref. No. or Q'ty	Part No.	SP	Description	
R144	1-216-073-00	s	METAL, CHIP 10k 5% 1/10W	
R145-154	1-216-097-91	s	METAL, CHIP 100k 5% 1/10W	
R155	1-216-081-00	s	METAL, CHIP 22k 5% 1/10W	
R156	1-216-081-00	s	METAL, CHIP 22k 5% 1/10W	
R157	1-216-081-00	s	METAL, CHIP 22k 5% 1/10W	
R158	1-216-081-00	s	METAL, CHIP 22k 5% 1/10W	
R159	1-216-073-00	s	METAL, CHIP 10k 5% 1/10W	
R160	1-216-049-91	s	METAL, CHIP 1k 5% 1/10W	
R161	1-216-063-91	s	METAL, CHIP 3.9k 5% 1/10W	
R162	1-216-089-91	s	METAL, CHIP 47k 5% 1/10W	
R163	1-216-053-00	s	METAL, CHIP 1.5k 5% 1/10W	
R164	1-216-059-00	s	METAL, CHIP 2.7k 5% 1/10W	
R165	1-216-071-00	s	METAL, CHIP 8.2k 5% 1/10W	
R167	1-216-295-91	s	RES, CHIP 0	
R168	1-216-073-00	s	METAL, CHIP 10k 5% 1/10W	
R169	1-216-049-91	s	METAL, CHIP 1k 5% 1/10W	
R170	1-216-063-91	s	METAL, CHIP 3.9k 5% 1/10W	
R171	1-216-089-91	s	METAL, CHIP 47k 5% 1/10W	
R172	1-216-053-00	s	METAL, CHIP 1.5k 5% 1/10W	
R173	1-216-059-00	s	METAL, CHIP 2.7k 5% 1/10W	
R174	1-216-071-00	s	METAL, CHIP 8.2k 5% 1/10W	
R175	1-216-121-91	s	METAL, CHIP 1M 5% 1/10W	
R176	1-216-121-91	s	METAL, CHIP 1M 5% 1/10W	
R177	1-216-025-91	s	METAL, CHIP 100 5% 1/10W	
R178	1-216-073-00	s	METAL, CHIP 10k 5% 1/10W	
R179	1-216-664-11	s	METAL, CHIP 3.6k 0.5% 1/10W	
R180	1-216-073-00	s	METAL, CHIP 10k 5% 1/10W	
R181	1-216-073-00	s	METAL, CHIP 10k 5% 1/10W	
R182	1-216-646-11	s	METAL, CHIP 620 0.5% 1/10W	
R183	1-216-073-00	s	METAL, CHIP 10k 5% 1/10W	
R184	1-216-073-00	s	METAL, CHIP 10k 5% 1/10W	
R186	1-216-095-00	s	METAL, CHIP 82k 5% 1/10W	
R187	1-208-799-11	s	METAL, CHIP 5.1k 0.5% 1/10W	
R188	1-216-085-00	s	METAL, CHIP 33k 5% 1/10W	
*R189	1-216-295-91	s	RES, CHIP 0	*9
*R190	1-208-814-11	s	METAL, CHIP 22k 0.5% 1/10W	*9
R201	1-216-603-11	s	METAL, CHIP 10 0.5% 1/10W	
R202	1-216-049-91	s	METAL, CHIP 1k 5% 1/10W	
*R203	1-216-057-00	s	METAL, CHIP 2.2k 5% 1/10W	*16
	1-216-051-00	s	METAL, CHIP 1.2k 5% 1/10W	*17
*R204	1-216-057-00	s	METAL, CHIP 2.2k 5% 1/10W	*16
	1-216-051-00	s	METAL, CHIP 1.2k 5% 1/10W	*17
R205	1-216-097-91	s	METAL, CHIP 100k 5% 1/10W	
*R206	1-216-097-00	s	METAL, CHIP 100k 5% 1/10W	*8
R208	1-216-105-91	s	METAL, CHIP 220k 5% 1/10W	
R209	1-216-626-11	s	METAL, CHIP 91 0.5% 1/10W	
R210	1-216-651-11	s	METAL, CHIP 1k 0.5% 1/10W	
R211	1-216-073-00	s	METAL, CHIP 10k 5% 1/10W	
R212	1-216-073-00	s	METAL, CHIP 10k 5% 1/10W	
R213	1-216-659-11	s	METAL, CHIP 2.2k 0.5% 1/10W	
R214	1-216-049-91	s	METAL, CHIP 1k 5% 1/10W	
R216	1-216-009-00	s	METAL, CHIP 22 5% 1/10W	
R217	1-216-073-00	s	METAL, CHIP 10k 5% 1/10W	
R219-223	1-216-073-00	s	METAL, CHIP 10k 5% 1/10W	
R224	1-216-049-91	s	METAL, CHIP 1k 5% 1/10W	
R225	1-216-073-00	s	METAL, CHIP 10k 5% 1/10W	
R226	1-216-073-00	s	METAL, CHIP 10k 5% 1/10W	
R227	1-216-085-00	s	METAL, CHIP 33k 5% 1/10W	

(AP-31B BOARD(for UVW-1400, NTSC))

Ref. No. or Q'ty	Part No.	SP	Description	
R228	1-216-085-00	s	METAL, CHIP 33k 5% 1/10W	
R230	1-208-806-11	s	METAL, CHIP 10k 0.5% 1/10W	
R231	1-216-041-00	s	METAL, CHIP 470 5% 1/10W	
R232	1-216-642-11	s	METAL, CHIP 430 0.5% 1/10W	
R233	1-208-806-11	s	METAL, CHIP 10k 0.5% 1/10W	
R234	1-208-822-11	s	METAL, CHIP 47k 0.5% 1/10W	
R235	1-208-806-11	s	METAL, CHIP 10k 0.5% 1/10W	
R236	1-208-814-11	s	METAL, CHIP 22k 0.5% 1/10W	
R237	1-215-473-00	s	METAL 150k 1% 1/6W	
R238	1-215-471-00	s	METAL 120k 1% 1/6W	
R239	1-215-479-00	s	METAL 270k 1% 1/6W	
R240	1-208-812-11	s	METAL, CHIP 18k 0.5% 1/10W	
R241	1-208-822-11	s	METAL, CHIP 47k 0.5% 1/10W	
R242	1-216-699-11	s	METAL, CHIP 100k 0.5% 1/10W	
R243	1-215-479-00	s	METAL 270k 1% 1/6W	
R244	1-215-467-00	s	METAL 82k 1% 1/6W	
R245	1-215-453-00	s	METAL 22k 1% 1/6W	
R246	1-208-812-11	s	METAL, CHIP 18k 0.5% 1/10W	
R247	1-208-814-11	s	METAL, CHIP 22k 0.5% 1/10W	
R248	1-216-089-91	s	METAL, CHIP 47k 5% 1/10W	
R249	1-216-071-00	s	METAL, CHIP 8.2k 5% 1/10W	
R250	1-216-081-00	s	METAL, CHIP 22k 5% 1/10W	
R251	1-216-121-91	s	METAL, CHIP 1M 5% 1/10W	
R252	1-216-121-91	s	METAL, CHIP 1M 5% 1/10W	
R253	1-216-121-91	s	METAL, CHIP 1M 5% 1/10W	
R254	1-216-121-91	s	METAL, CHIP 1M 5% 1/10W	
R255	1-216-009-00	s	METAL, CHIP 22 5% 1/10W	
R256	1-208-822-11	s	METAL, CHIP 47k 0.5% 1/10W	
R257	1-208-774-11	s	METAL, CHIP 470 5% 1/10W	
R258	1-216-622-11	s	METAL, CHIP 62 0.5% 1/10W	
R259	1-216-678-11	s	METAL, CHIP 13k 0.5% 1/10W	
R260	1-216-673-11	s	METAL, CHIP 8.2k 0.5% 1/10W	
R261	1-216-652-11	s	METAL, CHIP 1.1k 0.5% 1/10W	
R262	1-216-622-11	s	METAL, CHIP 62 0.5% 1/10W	
R263	1-208-784-11	s	METAL, CHIP 1.2k 0.5% 1/10W	
R264	1-216-676-11	s	METAL, CHIP 11k 0.5% 1/10W	
R265	1-216-677-11	s	METAL, CHIP 12k 0.5% 1/10W	
R266	1-208-785-11	s	METAL, CHIP 1.3k 0.5% 1/10W	
R267	1-215-493-00	s	METAL 1M 1% 1/6W	
R268	1-216-666-11	s	METAL, CHIP 4.3k 0.5% 1/10W	
R269	1-208-822-11	s	METAL, CHIP 47k 0.5% 1/10W	
R270	1-208-806-11	s	METAL, CHIP 10k 0.5% 1/10W	
R271	1-216-073-00	s	METAL, CHIP 10k 5% 1/10W	
R272	1-216-049-91	s	METAL, CHIP 1k 5% 1/10W	
R273	1-216-081-00	s	METAL, CHIP 22k 5% 1/10W	
R274	1-216-081-00	s	METAL, CHIP 22k 5% 1/10W	
R275	1-208-810-11	s	METAL, CHIP 15k 0.5% 1/10W	
R276	1-216-659-11	s	METAL, CHIP 2.2k 0.5% 1/10W	
R277	1-208-789-11	s	METAL, CHIP 2k 0.5% 1/10W	
R278	1-216-677-11	s	METAL, CHIP 12k 0.5% 1/10W	
R279	1-216-645-11	s	METAL, CHIP 560 0.5% 1/10W	
R280	1-216-121-91	s	METAL, CHIP 1M 5% 1/10W	
R281	1-208-814-11	s	METAL, CHIP 22k 0.5% 1/10W	
R282	1-208-803-11	s	METAL, CHIP 7.5k 0.5% 1/10W	
R283	1-216-045-00	s	METAL, CHIP 680 5% 1/10W	
R284	1-216-674-11	s	METAL, CHIP 9.1k 0.5% 1/10W	
R285	1-208-812-11	s	METAL, CHIP 18k 0.5% 1/10W	
R286	1-216-657-11	s	METAL, CHIP 1.8k 0.5% 1/10W	
R287	1-216-121-91	s	METAL, CHIP 1M 5% 1/10W	

Note: In this list * marked parts are design changed.
Refer to pages 18-29 to 18-31 for applicable serial numbers.

(AP-31B BOARD(for UVW-1400, NTSC))

Ref. No. or Q'ty	Part No.	SP	Description	
R288	1-216-121-91	s	METAL, CHIP 1M 5% 1/10W	
R289	1-208-822-11	s	METAL, CHIP 47k 0.5% 1/10W	
R290	1-208-814-11	s	METAL, CHIP 22k 0.5% 1/10W	
R291	1-216-659-11	s	METAL, CHIP 2.2k 0.5% 1/10W	
R292	1-216-659-11	s	METAL, CHIP 2.2k 0.5% 1/10W	
R293	1-216-073-00	s	METAL, CHIP 10k 5% 1/10W	
R294	1-216-097-91	s	METAL, CHIP 100k 5% 1/10W	
R295	1-216-073-00	s	METAL, CHIP 10k 5% 1/10W	
R296	1-216-121-91	s	METAL, CHIP 1M 5% 1/10W	
R297	1-216-073-00	s	METAL, CHIP 10k 5% 1/10W	
R298	1-216-073-00	s	METAL, CHIP 10k 5% 1/10W	
R299	1-216-121-91	s	METAL, CHIP 1M 5% 1/10W	
R300	1-216-069-00	s	METAL, CHIP 6.8k 5% 1/10W	
R301	1-216-073-00	s	METAL, CHIP 10k 5% 1/10W	
R302	1-208-799-11	s	METAL, CHIP 5.1k 0.5% 1/10W	
R303	1-216-663-11	s	METAL, CHIP 3.3k 0.5% 1/10W	
R304	1-216-650-11	s	METAL, CHIP 910 0.5% 1/10W	
R305	1-216-663-11	s	METAL, CHIP 3.3k 0.5% 1/10W	
R306	1-216-073-00	s	METAL, CHIP 10k 5% 1/10W	
R307	1-216-667-11	s	METAL, CHIP 4.7k 0.5% 1/10W	
R308	1-216-033-00	s	METAL, CHIP 220 5% 1/10W	
R309	1-216-067-00	s	METAL, CHIP 5.6k 5% 1/10W	
R310	1-216-067-00	s	METAL, CHIP 5.6k 5% 1/10W	
R311	1-208-810-11	s	METAL, CHIP 15k 0.5% 1/10W	
R312	1-247-807-31	s	CARBON 100 5% 1/4W	
R313	⚠ 1-216-399-00	s	WIREWOUND 6.8 10% 3W	
R314	⚠ 1-216-399-00	s	WIREWOUND 6.8 10% 3W	
R315	1-247-807-31	s	CARBON 100 5% 1/4W	
R316	1-216-121-91	s	METAL, CHIP 1M 5% 1/10W	
R317	1-249-389-11	s	CARBON 4.7 5% 1/4W	
R318	1-216-121-91	s	METAL, CHIP 1M 5% 1/10W	
R319	1-216-057-00	s	METAL, CHIP 2.2k 5% 1/10W	
R320	1-216-075-00	s	METAL, CHIP 12k 5% 1/10W	
R321	1-216-081-00	s	METAL, CHIP 22k 5% 1/10W	
R322	1-216-025-91	s	METAL, CHIP 100 5% 1/10W	
R323	1-216-121-91	s	METAL, CHIP 1M 5% 1/10W	
R324	1-216-033-00	s	METAL, CHIP 220 5% 1/10W	
R325	1-216-065-00	s	METAL, CHIP 4.7k 5% 1/10W	
R326	1-216-081-00	s	METAL, CHIP 22k 5% 1/10W	
R327	1-216-095-00	s	METAL, CHIP 82k 5% 1/10W	
R328	1-216-676-11	s	METAL, CHIP 11k 0.5% 1/10W	
R329	1-216-057-00	s	METAL, CHIP 2.2k 5% 1/10W	
R330	1-216-678-11	s	METAL, CHIP 13k 0.5% 1/10W	
R331	1-216-025-91	s	METAL, CHIP 100 5% 1/10W	
R332	1-216-073-00	s	METAL, CHIP 10k 5% 1/10W	
R333	1-216-073-00	s	METAL, CHIP 10k 5% 1/10W	
R334	1-216-073-00	s	METAL, CHIP 10k 5% 1/10W	
R335	1-216-684-91	s	METAL, CHIP 24k 0.5% 1/10W	
R336	1-216-025-91	s	METAL, CHIP 100 5% 1/10W	
R337	1-216-073-00	s	METAL, CHIP 10k 5% 1/10W	
R338	1-216-073-00	s	METAL, CHIP 10k 5% 1/10W	
R339	1-216-025-91	s	METAL, CHIP 100 5% 1/10W	
R341	1-216-095-00	s	METAL, CHIP 82k 5% 1/10W	
R342	1-216-073-00	s	METAL, CHIP 10k 5% 1/10W	
R344	1-216-295-91	s	RES, CHIP 0	
R345	1-216-121-91	s	METAL, CHIP 1M 5% 1/10W	
R346	1-216-121-91	s	METAL, CHIP 1M 5% 1/10W	
R347	1-216-085-00	s	METAL, CHIP 33k 5% 1/10W	
*R350	1-216-295-91	s	RES, CHIP 0	*9

(AP-31B BOARD(for UVW-1400, NTSC))

Ref. No. or Q'ty	Part No.	SP	Description	
*R351	1-208-814-11	s	METAL, CHIP 22k 0.5% 1/10W	*9
R387	1-208-799-11	s	METAL, CHIP 5.1k 0.5% 1/10W	
R400	1-216-603-11	s	METAL, CHIP 10 0.5% 1/10W	
R402	1-216-295-91	s	RES, CHIP 0	
R403	1-216-073-00	s	METAL, CHIP 10k 5% 1/10W	
R404	1-216-073-00	s	METAL, CHIP 10k 5% 1/10W	
R405	1-216-049-91	s	METAL, CHIP 1k 5% 1/10W	
R406	1-216-033-00	s	METAL, CHIP 220 5% 1/10W	
R407	1-216-121-91	s	METAL, CHIP 1M 5% 1/10W	
R408	1-216-053-00	s	METAL, CHIP 1.5k 5% 1/10W	
R409	1-216-089-91	s	METAL, CHIP 47k 5% 1/10W	
R410	1-216-053-00	s	METAL, CHIP 1.5k 5% 1/10W	
R411	1-216-089-91	s	METAL, CHIP 47k 5% 1/10W	
R412	1-216-049-91	s	METAL, CHIP 1k 5% 1/10W	
R413	1-216-067-00	s	METAL, CHIP 5.6k 5% 1/10W	
R414	1-216-089-91	s	METAL, CHIP 47k 5% 1/10W	
R415	1-216-089-91	s	METAL, CHIP 47k 5% 1/10W	
R416	1-216-057-00	s	METAL, CHIP 2.2k 5% 1/10W	
R417	1-216-121-91	s	METAL, CHIP 1M 5% 1/10W	
R418	1-216-049-91	s	METAL, CHIP 1k 5% 1/10W	
R419	1-216-073-00	s	METAL, CHIP 10k 5% 1/10W	
R420	1-216-113-00	s	METAL, CHIP 470k 5% 1/10W	
R421	1-216-025-91	s	METAL, CHIP 100 5% 1/10W	
R422	1-216-067-00	s	METAL, CHIP 5.6k 5% 1/10W	
R423	1-216-089-91	s	METAL, CHIP 47k 5% 1/10W	
R424	1-216-073-00	s	METAL, CHIP 10k 5% 1/10W	
R425	1-216-065-00	s	METAL, CHIP 4.7k 5% 1/10W	
R426	1-216-065-00	s	METAL, CHIP 4.7k 5% 1/10W	
R427	1-216-025-91	s	METAL, CHIP 100 5% 1/10W	
R428	1-216-073-00	s	METAL, CHIP 10k 5% 1/10W	
*R500	1-215-403-00	s	METAL 180 1% 1/6W	*8
	1-216-633-11	s	METAL, CHIP 180 0.5% 1/10W	*9
*R501	1-215-403-00	s	METAL 180 1% 1/6W	*8
	1-216-633-11	s	METAL, CHIP 180 0.5% 1/10W	*9
*R502	1-249-417-11	s	CARBON 1k 5% 1/4W	*8
	1-216-049-91	s	METAL, CHIP 1k 5% 1/10W	*9
R600	1-216-025-91	s	METAL, CHIP 100 5% 1/10W	
R601	1-216-025-91	s	METAL, CHIP 100 5% 1/10W	
R602	1-247-855-11	s	CARBON 10k 5% 1/4W	
RV1	1-241-789-11	s	RES, ADJ METAL 220k	
RV2	1-241-784-11	s	RES, ADJ METAL 4.7k	
RV3	1-241-783-11	s	RES, ADJ METAL 2.2k	
RV4	1-241-785-11	s	RES, ADJ METAL 10k	
*RV5	1-241-123-11	s	RES, ADJ CARBON 47k	*8
	1-241-786-11	s	RES, ADJ METAL 22k	*9
RV201	1-241-789-11	s	RES, ADJ METAL 220k	
RV202	1-241-784-11	s	RES, ADJ METAL 4.7k	
RV203	1-241-783-11	s	RES, ADJ METAL 2.2k	
RV204	1-241-785-11	s	RES, ADJ METAL 10k	
*RV205	1-241-123-11	s	RES, ADJ CARBON 47k	*8
	1-241-786-11	s	RES, ADJ METAL 22k	*9
S1	1-570-602-11	s	SWITCH, DIP 2-CKT	
S2	1-570-602-11	s	SWITCH, DIP 2-CKT	
S201	1-570-602-11	s	SWITCH, DIP 2-CKT	
S202	1-570-602-11	s	SWITCH, DIP 2-CKT	

Note: In this list * marked parts are design changed.
Refer to pages 18-29 to 18-31 for applicable serial numbers.

(AP-31B BOARD(for UVW-1400, NTSC))

Ref. No. or Q'ty	Part No.	SP	Description	
*TH1	1-800-199-00	s	THERMISTOR S-1250	*8
	1-807-972-11	s	THERMISTOR SV-1715 1.25k	*9
*TH2	1-800-199-00	s	THERMISTOR S-1250	*8
	1-807-972-11	s	THERMISTOR SV-1715 1.25k	*9

AP-31BP BOARD(for UVW-1400P, PAL)

Ref. No. or Q'ty	Part No.	SP	Description	
	AP-31BP board is used for UVW-1400P.			
1pc	A-8275-608-A	o	MOUNTED CIRCUIT BOARD, AP-31BP	
1pc	3-179-084-01	s	LEVER (R), PC BOARD	
1pc	3-179-085-01	s	LEVER (L), PC BOARD	
1pc	3-182-385-02	o	PLATE, SHIELD (S), CARD	
1pc	3-655-862-00	o	SPACER, INSULATING	
1pc	7-621-759-45	s	SCREW, +PSW2.6x6	
1pc	3-182-298-01	o	CASE, SHIELD (LID), AP (2)	
1pc	3-182-351-01	o	CASE, SHIELD, AP (2B)	
C2	1-163-133-00	s	CERAMIC, CHIP 470pF 5% 50V	
*C3	1-163-243-11	s	CERAMIC, CHIP 47pF 5% 50V	*38
	1-163-121-00	s	CERAMIC, CHIP 150pF 5% 50V	*39
*C4	1-163-235-11	s	CERAMIC, CHIP 22pF 5% 50V	*38
	1-163-113-00	s	CERAMIC, CHIP 68pF 5% 50V	*39
*C6	1-163-127-00	s	CERAMIC, CHIP 270pF 5% 50V	*8
C7	1-130-485-00	s	MYLAR 0.015uF 5% 50V	
C8	1-126-933-11	s	ELECT 100uF 20% 16V	
C9	1-163-125-00	s	CERAMIC, CHIP 220pF 5% 50V	
C10	1-126-964-11	s	ELECT 10uF 20% 50V	
C11	1-128-551-11	s	ELECT 22uF 20% 50V	
C12	1-163-263-11	s	CERAMIC, CHIP 330pF 5% 50V	
C13	1-130-481-00	s	MYLAR 0.0068uF 5% 50V	
C14	1-164-182-11	s	CERAMIC, CHIP 3300pF 10% 100V	
C15	1-126-964-11	s	ELECT 10uF 20% 50V	
C16	1-128-551-11	s	ELECT 22uF 20% 50V	
C17	1-163-235-11	s	CERAMIC, CHIP 22pF 5% 50V	
C18	1-128-551-11	s	ELECT 22uF 20% 50V	
C19	1-163-235-11	s	CERAMIC, CHIP 22pF 5% 50V	
C20	1-130-498-00	s	MYLAR 0.18uF 5% 50V	
C21-26	1-130-487-00	s	MYLAR 0.022uF 5% 50V	
C27	1-163-243-11	s	CERAMIC, CHIP 47pF 5% 50V	
C28	1-163-017-00	s	CERAMIC, CHIP 0.0047uF 5% 50V	
C29	1-130-483-00	s	MYLAR 0.01uF 5% 50V	
C30	1-163-275-11	s	CERAMIC, CHIP 0.001uF 5% 50V	
C31	1-163-275-11	s	CERAMIC, CHIP 0.001uF 5% 50V	
C32	1-163-275-11	s	CERAMIC, CHIP 0.001uF 5% 50V	
C33	1-163-275-11	s	CERAMIC, CHIP 0.001uF 5% 50V	
C34	1-130-483-00	s	MYLAR 0.01uF 5% 50V	
C35	1-163-139-00	s	CERAMIC, CHIP 820pF 5% 50V	
C36	1-163-243-11	s	CERAMIC, CHIP 47pF 5% 50V	
C37	1-164-232-11	s	CERAMIC, CHIP 0.01uF 10% 100V	
C38	1-164-232-11	s	CERAMIC, CHIP 0.01uF 10% 100V	
C39	1-124-925-11	s	ELECT 2.2uF 20% 100V	
C40	1-164-004-11	s	CERAMIC, CHIP 0.1uF 10% 25V	
C41	1-107-498-11	s	FILM, CHIP 0.0022uF 2% 50V	
C42	1-107-498-11	s	FILM, CHIP 0.0022uF 2% 50V	
C43	1-107-499-11	s	FILM, CHIP 0.0039uF 2% 16V	
C44	1-131-345-00	s	TANTALUM 0.47uF 10% 35V	
C45	1-130-497-00	s	MYLAR 0.15uF 5% 50V	
C46	1-124-925-11	s	ELECT 2.2uF 20% 100V	
C47	1-104-553-11	s	FILM, CHIP 0.015uF 5% 16V	
C48	1-130-499-00	s	MYLAR 0.22uF 5% 50V	
C49	1-164-344-11	s	CERAMIC, CHIP 0.068uF 10% 25V	
C50	1-104-560-11	s	FILM, CHIP 0.056uF 5% 16V	
C51	1-124-925-11	s	ELECT 2.2uF 20% 100V	
C52	1-107-553-11	s	FILM, CHIP 0.0056uF 2% 16V	
C53	1-104-551-11	s	FILM, CHIP 0.01uF 5% 16V	

Note: In this list * marked parts are design changed.
Refer to pages 18-29 to 18-31 for applicable serial numbers.

(AP-31BP BOARD(for UVW-1400P, PAL))

Ref. No. or Q'ty	Part No.	SP	Description
C54	1-130-478-00	s	MYLAR 0.0039uF 5% 50V
C55	1-130-478-00	s	MYLAR 0.0039uF 5% 50V
C56	1-163-251-11	s	CERAMIC, CHIP 100pF 5% 50V
C57	1-126-947-11	s	ELECT 47uF 20% 35V
C58	1-163-263-11	s	CERAMIC, CHIP 330pF 5% 50V
C59	1-163-235-11	s	CERAMIC, CHIP 22pF 5% 50V
C60	1-126-964-11	s	ELECT 10uF 20% 50V
C61	1-126-964-11	s	ELECT 10uF 20% 50V
C62	1-126-926-11	s	ELECT 1000uF 20% 10V
C63	1-126-926-11	s	ELECT 1000uF 20% 10V
C64	1-126-926-11	s	ELECT 1000uF 20% 10V
C65	1-164-004-11	s	CERAMIC, CHIP 0.1uF 10% 25V
C66	1-126-926-11	s	ELECT 1000uF 20% 10V
C67	1-126-947-11	s	ELECT 47uF 20% 35V
C68	1-124-903-11	s	ELECT 1uF 20% 50V
C69	1-163-251-11	s	CERAMIC, CHIP 100pF 5% 50V
C70	1-126-947-11	s	ELECT 47uF 20% 35V
C71	1-163-235-11	s	CERAMIC, CHIP 22pF 5% 50V
C72	1-163-809-11	s	CERAMIC, CHIP 0.047uF 10% 25V
C73	1-130-491-00	s	MYLAR 0.047uF 5% 50V
C74	1-130-491-00	s	MYLAR 0.047uF 5% 50V
C75	1-130-491-00	s	MYLAR 0.047uF 5% 50V
C76	1-130-491-00	s	MYLAR 0.047uF 5% 50V
C77	1-163-251-11	s	CERAMIC, CHIP 100pF 5% 50V
C78	1-126-964-11	s	ELECT 10uF 20% 50V
C79	1-126-964-11	s	ELECT 10uF 20% 50V
C80	1-126-964-11	s	ELECT 10uF 20% 50V
C81	1-130-483-00	s	MYLAR 0.01uF 5% 50V
C82	1-126-926-11	s	ELECT 1000uF 20% 10V
C83	1-126-926-11	s	ELECT 1000uF 20% 10V
C84	1-124-925-11	s	ELECT 2.2uF 20% 100V
C85	1-131-352-00	s	TANTALUM 6.8uF 10% 35V
C87	1-126-964-11	s	ELECT 10uF 20% 50V
*C88	1-126-964-11	s	ELECT 10uF 20% 50V *8
C202	1-163-133-00	s	CERAMIC, CHIP 470pF 5% 50V
*C203	1-163-243-11	s	CERAMIC, CHIP 47pF 5% 50V *38
	1-163-121-00	s	CERAMIC, CHIP 150pF 5% 50V *39
*C204	1-163-235-11	s	CERAMIC, CHIP 22pF 5% 50V *38
	1-163-113-00	s	CERAMIC, CHIP 68pF 5% 50V *39
*C206	1-163-127-00	s	CERAMIC, CHIP 270pF 5% 50V *8
C207	1-130-485-00	s	MYLAR 0.015uF 5% 50V
C208	1-126-933-11	s	ELECT 100uF 20% 16V
C209	1-163-125-00	s	CERAMIC, CHIP 220pF 5% 50V
C210	1-126-964-11	s	ELECT 10uF 20% 50V
C211	1-128-551-11	s	ELECT 22uF 20% 50V
C212	1-163-263-11	s	CERAMIC, CHIP 330pF 5% 50V
C213	1-130-481-00	s	MYLAR 0.0068uF 5% 50V
C214	1-164-182-11	s	CERAMIC, CHIP 3300pF 10% 100V
C215	1-126-964-11	s	ELECT 10uF 20% 50V
C216	1-128-551-11	s	ELECT 22uF 20% 50V
C217	1-163-235-11	s	CERAMIC, CHIP 22pF 5% 50V
C218	1-128-551-11	s	ELECT 22uF 20% 50V
C219	1-163-235-11	s	CERAMIC, CHIP 22pF 5% 50V
C220	1-130-498-00	s	MYLAR 0.18uF 5% 50V
C221-226	1-130-487-00	s	MYLAR 0.022uF 5% 50V
C227	1-163-243-11	s	CERAMIC, CHIP 47pF 5% 50V
C228	1-163-017-00	s	CERAMIC, CHIP 0.0047uF 5% 50V
C229	1-130-483-00	s	MYLAR 0.01uF 5% 50V

(AP-31BP BOARD(for UVW-1400P, PAL))

Ref. No. or Q'ty	Part No.	SP	Description
C230	1-163-275-11	s	CERAMIC, CHIP 0.001uF 5% 50V
C231	1-163-275-11	s	CERAMIC, CHIP 0.001uF 5% 50V
C232	1-163-275-11	s	CERAMIC, CHIP 0.001uF 5% 50V
C233	1-163-275-11	s	CERAMIC, CHIP 0.001uF 5% 50V
C234	1-130-483-00	s	MYLAR 0.01uF 5% 50V
C235	1-163-139-00	s	CERAMIC, CHIP 820pF 5% 50V
C236	1-163-243-11	s	CERAMIC, CHIP 47pF 5% 50V
C237	1-124-925-11	s	ELECT 2.2uF 20% 100V
C238	1-107-498-11	s	FILM, CHIP 0.0022uF 2% 50V
C239	1-107-498-11	s	FILM, CHIP 0.0022uF 2% 50V
C240	1-107-499-11	s	FILM, CHIP 0.0039uF 2% 16V
C241	1-131-345-00	s	TANTALUM 0.47uF 10% 35V
C242	1-130-497-00	s	MYLAR 0.15uF 5% 50V
C243	1-124-925-11	s	ELECT 2.2uF 20% 100V
C244	1-104-553-11	s	FILM, CHIP 0.015uF 5% 16V
C245	1-130-499-00	s	MYLAR 0.22uF 5% 50V
C246	1-164-344-11	s	CERAMIC, CHIP 0.068uF 10% 25V
C247	1-104-560-11	s	FILM, CHIP 0.056uF 5% 16V
C248	1-124-925-11	s	ELECT 2.2uF 20% 100V
C249	1-107-553-11	s	FILM, CHIP 0.0056uF 2% 16V
C250	1-104-551-11	s	FILM, CHIP 0.01uF 5% 16V
C251	1-130-478-00	s	MYLAR 0.0039uF 5% 50V
C252	1-130-478-00	s	MYLAR 0.0039uF 5% 50V
C253	1-163-251-11	s	CERAMIC, CHIP 100pF 5% 50V
C254	1-126-947-11	s	ELECT 47uF 20% 35V
C255	1-163-263-11	s	CERAMIC, CHIP 330pF 5% 50V
C256	1-163-235-11	s	CERAMIC, CHIP 22pF 5% 50V
C257	1-126-964-11	s	ELECT 10uF 20% 50V
C258	1-126-964-11	s	ELECT 10uF 20% 50V
C259	1-126-926-11	s	ELECT 1000uF 20% 10V
C260	1-126-926-11	s	ELECT 1000uF 20% 10V
C261	1-126-926-11	s	ELECT 1000uF 20% 10V
C262	1-164-004-11	s	CERAMIC, CHIP 0.1uF 10% 25V
C263	1-126-926-11	s	ELECT 1000uF 20% 10V
C264	1-126-947-11	s	ELECT 47uF 20% 35V
C265	1-124-903-11	s	ELECT 1uF 20% 50V
C266	1-163-251-11	s	CERAMIC, CHIP 100pF 5% 50V
C267	1-126-947-11	s	ELECT 47uF 20% 35V
C268	1-163-235-11	s	CERAMIC, CHIP 22pF 5% 50V
C269	1-163-809-11	s	CERAMIC, CHIP 0.047uF 10% 25V
C270	1-124-925-11	s	ELECT 2.2uF 20% 100V
C271	1-131-352-00	s	TANTALUM 6.8uF 10% 35V
*C272	1-126-964-11	s	ELECT 10uF 20% 50V *8
C278	1-126-964-11	s	ELECT 10uF 20% 50V
C279	1-126-964-11	s	ELECT 10uF 20% 50V
C280	1-126-964-11	s	ELECT 10uF 20% 50V
C281	1-130-483-00	s	MYLAR 0.01uF 5% 50V
C282	1-126-926-11	s	ELECT 1000uF 20% 10V
C283	1-126-926-11	s	ELECT 1000uF 20% 10V
C401	1-163-033-91	s	CERAMIC, CHIP 0.022uF 50V
C402	1-126-933-11	s	ELECT 100uF 20% 16V
C403	1-163-989-11	s	CERAMIC, CHIP 0.033uF 10% 25V
C404	1-164-004-11	s	CERAMIC, CHIP 0.1uF 10% 25V
C405	1-164-232-11	s	CERAMIC, CHIP 0.01uF 10% 100V
C406	1-164-232-11	s	CERAMIC, CHIP 0.01uF 10% 100V
C408	1-126-964-11	s	ELECT 10uF 20% 50V
C409	1-163-239-11	s	CERAMIC, CHIP 33pF 5% 50V
C410	1-164-004-11	s	CERAMIC, CHIP 0.1uF 10% 25V
C411	1-163-989-11	s	CERAMIC, CHIP 0.033uF 10% 25V

Note: In this list * marked parts are design changed.
Refer to pages 18-29 to 18-31 for applicable serial numbers.

(AP-31BP BOARD(for UVW-1400P, PAL))

Ref. No. or Q'ty	Part No.	SP	Description	
C412	1-126-964-11	s	ELECT 10uF 20% 50V	
C413	1-126-964-11	s	ELECT 10uF 20% 50V	
C414	1-126-964-11	s	ELECT 10uF 20% 50V	
C415	1-163-033-91	s	CERAMIC, CHIP 0.022uF 50V	
C416	1-163-033-91	s	CERAMIC, CHIP 0.022uF 50V	
C417	1-126-933-11	s	ELECT 100uF 20% 16V	
C418	1-126-933-11	s	ELECT 100uF 20% 16V	
C419	1-126-964-11	s	ELECT 10uF 20% 50V	
C420	1-163-033-91	s	CERAMIC, CHIP 0.022uF 50V	
C421	1-163-033-91	s	CERAMIC, CHIP 0.022uF 50V	
C422	1-126-933-11	s	ELECT 100uF 20% 16V	
C423	1-126-933-11	s	ELECT 100uF 20% 16V	
C424	1-126-933-11	s	ELECT 100uF 20% 16V	
C425	1-126-933-11	s	ELECT 100uF 20% 16V	
C426	1-163-033-91	s	CERAMIC, CHIP 0.022uF 50V	
C427	1-163-033-91	s	CERAMIC, CHIP 0.022uF 50V	
C428	1-163-989-11	s	CERAMIC, CHIP 0.033uF 10% 25V	
C429	1-161-021-11	s	CERAMIC 0.047uF 10% 25V	
C430	1-161-021-11	s	CERAMIC 0.047uF 10% 25V	
C500	1-163-125-00	s	CERAMIC, CHIP 220pF 5% 50V	
*C501	1-102-114-00	s	CERAMIC 470pF 10% 50V	*8
	1-163-133-00	s	CERAMIC, CHIP 470pF 5% 50V	*9
C600	1-163-809-11	s	CERAMIC, CHIP 0.047uF 10% 25V	
C601	1-163-809-11	s	CERAMIC, CHIP 0.047uF 10% 25V	
CN1	1-506-468-11	s	CONNECTOR 3P, MALE	
CN2	1-506-468-11	s	CONNECTOR 3P, MALE	
CN3	1-564-002-11	s	CONNECTOR 3P, MALE	
CN111	1-573-600-21	s	CONNECTOR, PHEC 100P, MALE	
D1	8-719-941-23	s	DIODE DA204U	
D2	8-719-941-23	s	DIODE DA204U	
D3	8-719-941-23	s	DIODE DA204U	
D5	8-719-941-23	s	DIODE DA204U	
D6	8-719-123-85	s	DIODE 1SS304	
D7	8-719-941-23	s	DIODE DA204U	
D8	8-719-123-85	s	DIODE 1SS304	
D10	8-719-123-85	s	DIODE 1SS304	
D11	8-719-123-85	s	DIODE 1SS304	
D12	8-719-123-85	s	DIODE 1SS304	
D13	8-719-123-85	s	DIODE 1SS304	
D15	8-719-123-85	s	DIODE 1SS304	
D16	8-719-123-85	s	DIODE 1SS304	
D17	8-719-941-23	s	DIODE DA204U	
D18	8-719-911-19	s	DIODE 1SS119	
D201	8-719-941-23	s	DIODE DA204U	
D202	8-719-941-23	s	DIODE DA204U	
D203	8-719-941-23	s	DIODE DA204U	
D204	8-719-941-23	s	DIODE DA204U	
D205	8-719-123-85	s	DIODE 1SS304	
D206	8-719-941-23	s	DIODE DA204U	
D207	8-719-123-85	s	DIODE 1SS304	
D209	8-719-123-85	s	DIODE 1SS304	
D210	8-719-941-23	s	DIODE DA204U	
D211	8-719-911-19	s	DIODE 1SS119	
D401	8-719-941-23	s	DIODE DA204U	
D403	8-719-941-23	s	DIODE DA204U	
*D500	8-719-110-41	s	DIODE RD15ES-B2	*8
	8-719-106-88	s	DIODE RD15M-B1	*9

(AP-31BP BOARD(for UVW-1400P, PAL))

Ref. No. or Q'ty	Part No.	SP	Description	
IC1	8-759-701-25	s	IC NJM2068D-D	
IC2	8-759-701-25	s	IC NJM2068D-D	
IC3	8-759-701-25	s	IC NJM2068D-D	
IC4	8-759-701-25	s	IC NJM2068D-D	
IC5	8-759-705-58	s	IC NJM4558D-D	
IC6	8-759-705-58	s	IC NJM4558D-D	
IC7	8-759-705-58	s	IC NJM4558D-D	
IC8	8-752-018-80	s	IC CX20188	
IC9	8-759-705-58	s	IC NJM4558D-D	
IC10	8-759-705-58	s	IC NJM4558D-D	
IC11	8-759-145-57	s	IC UPC4557C	
IC12	8-759-917-18	s	IC SN74HCU04AN	
IC13	8-759-917-18	s	IC SN74HCU04AN	
IC14	8-759-145-57	s	IC UPC4557C	
IC15	8-759-705-58	s	IC NJM4558D-D	
IC201	8-759-701-25	s	IC NJM2068D-D	
IC202	8-759-701-25	s	IC NJM2068D-D	
IC203	8-759-701-25	s	IC NJM2068D-D	
IC204	8-759-701-25	s	IC NJM2068D-D	
IC205	8-759-705-58	s	IC NJM4558D-D	
IC206	8-759-705-58	s	IC NJM4558D-D	
IC207	8-759-705-58	s	IC NJM4558D-D	
IC208	8-759-705-58	s	IC NJM4558D-D	
IC209	8-759-705-58	s	IC NJM4558D-D	
IC210	8-759-145-57	s	IC UPC4557C	
IC211	8-759-705-58	s	IC NJM4558D-D	
IC401	8-759-701-25	s	IC NJM2068D-D	
IC402	8-759-729-03	s	IC NJM2903D	
IC405	8-759-172-41	s	IC L78M09T-TL	
IC406	8-759-173-37	s	IC L79M09T-TL	
IC407	8-759-635-83	s	IC M51957BFP	
IC408	8-759-172-41	s	IC L78M09T-TL	
IC409	8-759-173-37	s	IC L79M09T-TL	
IC410	8-759-701-25	s	IC NJM2068D-D	
*JW61	1-217-666-11	s	RES 0	*9
*L1	1-410-068-11	s	INDUCTOR 5.60mH	*8
L2	1-408-617-31	s	INDUCTOR 150uH	
*L201	1-410-068-11	s	INDUCTOR 5.60mH	*8
L202	1-408-617-31	s	INDUCTOR 150uH	
L401	1-410-470-11	s	INDUCTOR 10uH	
L402	1-410-470-11	s	INDUCTOR 10uH	
PS1	⚠ 1-532-727-11	s	LINK, IC 0.25A	
PS2	⚠ 1-532-727-11	s	LINK, IC 0.25A	
Q1	8-729-209-06	s	TRANSISTOR 2SC4213-A	
Q2	8-729-803-89	s	TRANSISTOR 2SC3332-T	
Q3	8-729-803-89	s	TRANSISTOR 2SC3332-T	
Q4	8-729-209-06	s	TRANSISTOR 2SC4213-A	
Q5	8-729-209-06	s	TRANSISTOR 2SC4213-A	
Q6	8-729-209-06	s	TRANSISTOR 2SC4213-A	
Q7	8-729-209-06	s	TRANSISTOR 2SC4213-A	
Q8	8-729-140-63	s	TRANSISTOR 2SA1611-M5M6	
Q9	8-729-109-44	s	TRANSISTOR 2SK94	
Q10	8-729-203-30	s	TRANSISTOR 2SJ106Y	
Q11	8-729-905-18	s	TRANSISTOR DTC144EU	
Q12	8-729-905-12	s	TRANSISTOR DTA144EU	
Q13	8-729-422-44	s	TRANSISTOR 2SK663	
Q14	8-729-209-06	s	TRANSISTOR 2SC4213-A	

Note: In this list * marked parts are design changed.
Refer to pages 18-29 to 18-31 for applicable serial numbers.

(AP-31BP BOARD(for UVW-1400P, PAL))

Ref. No. or Q'ty	Part No.	SP	Description	
Q15	8-729-209-06	s	TRANSISTOR 2SC4213-A	
Q16	8-729-140-63	s	TRANSISTOR 2SA1611-M5M6	
Q17	8-729-422-44	s	TRANSISTOR 2SK663	
Q18	8-729-423-93	s	TRANSISTOR 2SD2136-R(TA)	
Q19	8-729-022-00	s	TRANSISTOR 2SB1416-R(TA)	
Q20	8-729-021-98	s	TRANSISTOR 2SJ226-AZ	
Q21	8-729-021-98	s	TRANSISTOR 2SJ226-AZ	
Q22	8-729-117-32	s	TRANSISTOR 2SC4177	
Q23	8-729-117-32	s	TRANSISTOR 2SC4177	
Q25	8-729-140-93	s	TRANSISTOR 2SB733-34	
Q26	8-729-209-06	s	TRANSISTOR 2SC4213-A	
Q27	8-729-209-06	s	TRANSISTOR 2SC4213-A	
Q28	8-729-804-09	s	TRANSISTOR 2SA1319-T	
Q29	8-729-804-09	s	TRANSISTOR 2SA1319-T	
Q30	8-729-140-93	s	TRANSISTOR 2SB733-34	
Q34	8-729-905-18	s	TRANSISTOR DTC144EU	
Q35	8-729-905-12	s	TRANSISTOR DTA144EU	
Q36	8-729-422-44	s	TRANSISTOR 2SK663	
Q201	8-729-209-06	s	TRANSISTOR 2SC4213-A	
Q202	8-729-803-89	s	TRANSISTOR 2SC3332-T	
Q203	8-729-803-89	s	TRANSISTOR 2SC3332-T	
Q204	8-729-209-06	s	TRANSISTOR 2SC4213-A	
Q205	8-729-209-06	s	TRANSISTOR 2SC4213-A	
Q206	8-729-209-06	s	TRANSISTOR 2SC4213-A	
Q207	8-729-209-06	s	TRANSISTOR 2SC4213-A	
Q208	8-729-140-63	s	TRANSISTOR 2SA1611-M5M6	
Q209	8-729-109-44	s	TRANSISTOR 2SK94	
Q210	8-729-203-30	s	TRANSISTOR 2SJ106Y	
Q211	8-729-422-44	s	TRANSISTOR 2SK663	
Q212	8-729-209-06	s	TRANSISTOR 2SC4213-A	
Q213	8-729-209-06	s	TRANSISTOR 2SC4213-A	
Q214	8-729-140-63	s	TRANSISTOR 2SA1611-M5M6	
Q215	8-729-422-44	s	TRANSISTOR 2SK663	
Q216	8-729-423-93	s	TRANSISTOR 2SD2136-R(TA)	
Q217	8-729-022-00	s	TRANSISTOR 2SB1416-R(TA)	
Q218	8-729-021-98	s	TRANSISTOR 2SJ226-AZ	
Q219	8-729-021-98	s	TRANSISTOR 2SJ226-AZ	
Q220	8-729-117-32	s	TRANSISTOR 2SC4177	
Q221	8-729-117-32	s	TRANSISTOR 2SC4177	
Q223	8-729-140-93	s	TRANSISTOR 2SB733-34	
Q224	8-729-905-18	s	TRANSISTOR DTC144EU	
Q225	8-729-905-12	s	TRANSISTOR DTA144EU	
Q226	8-729-422-44	s	TRANSISTOR 2SK663	
Q401	8-729-209-06	s	TRANSISTOR 2SC4213-A	
Q402	8-729-209-06	s	TRANSISTOR 2SC4213-A	
Q403	8-729-209-06	s	TRANSISTOR 2SC4213-A	
R1	1-216-603-11	s	METAL, CHIP 10 0.5% 1/10W	
R2	1-216-049-91	s	METAL, CHIP 1k 5% 1/10W	
*R3	1-216-057-00	s	METAL, CHIP 2.2k 5% 1/10W	*16
	1-216-051-00	s	METAL, CHIP 1.2k 5% 1/10W	*17
*R4	1-216-057-00	s	METAL, CHIP 2.2k 5% 1/10W	*16
	1-216-051-00	s	METAL, CHIP 1.2k 5% 1/10W	*17
R5	1-216-097-91	s	METAL, CHIP 100k 5% 1/10W	
*R6	1-216-097-00	s	METAL, CHIP 100k 5% 1/10W	*8
R8	1-216-105-91	s	METAL, CHIP 220k 5% 1/10W	
R9	1-216-626-11	s	METAL, CHIP 91 0.5% 1/10W	
*R10	1-216-651-11	s	METAL, CHIP 1k 0.5% 1/10W	*16

(AP-31BP BOARD(for UVW-1400P, PAL))

Ref. No. or Q'ty	Part No.	SP	Description	
	1-208-774-11	s	METAL, CHIP 470 5% 1/10W	*17
R11	1-216-073-00	s	METAL, CHIP 10k 5% 1/10W	
R12	1-216-073-00	s	METAL, CHIP 10k 5% 1/10W	
R13	1-216-659-11	s	METAL, CHIP 2.2k 0.5% 1/10W	
R14	1-216-049-91	s	METAL, CHIP 1k 5% 1/10W	
R15	1-208-806-11	s	METAL, CHIP 10k 0.5% 1/10W	
R16	1-216-009-00	s	METAL, CHIP 22 5% 1/10W	
R17	1-216-073-00	s	METAL, CHIP 10k 5% 1/10W	
R19-23	1-216-073-00	s	METAL, CHIP 10k 5% 1/10W	
R24	1-216-049-91	s	METAL, CHIP 1k 5% 1/10W	
R25	1-216-073-00	s	METAL, CHIP 10k 5% 1/10W	
R26	1-216-073-00	s	METAL, CHIP 10k 5% 1/10W	
R27	1-216-085-00	s	METAL, CHIP 33k 5% 1/10W	
R28	1-216-085-00	s	METAL, CHIP 33k 5% 1/10W	
R30	1-208-806-11	s	METAL, CHIP 10k 0.5% 1/10W	
R31	1-216-041-00	s	METAL, CHIP 470 5% 1/10W	
R32	1-216-642-11	s	METAL, CHIP 430 0.5% 1/10W	
R33	1-208-806-11	s	METAL, CHIP 10k 0.5% 1/10W	
R34	1-208-822-11	s	METAL, CHIP 47k 0.5% 1/10W	
R35	1-208-806-11	s	METAL, CHIP 10k 0.5% 1/10W	
R36	1-208-814-11	s	METAL, CHIP 22k 0.5% 1/10W	
R37	1-215-479-00	s	METAL 270k 1% 1/6W	
R38	1-215-471-00	s	METAL 120k 1% 1/6W	
R39	1-215-479-00	s	METAL 270k 1% 1/6W	
R40	1-208-812-11	s	METAL, CHIP 18k 0.5% 1/10W	
R41	1-208-824-11	s	METAL, CHIP 56k 0.5% 1/10W	
R42	1-216-699-11	s	METAL, CHIP 100k 0.5% 1/10W	
R44	1-215-493-00	s	METAL 1M 1% 1/6W	
R45	1-215-453-00	s	METAL 22k 1% 1/6W	
R46	1-208-812-11	s	METAL, CHIP 18k 0.5% 1/10W	
R47	1-208-814-11	s	METAL, CHIP 22k 0.5% 1/10W	
R48	1-216-089-91	s	METAL, CHIP 47k 5% 1/10W	
R49	1-216-071-00	s	METAL, CHIP 8.2k 5% 1/10W	
R50	1-216-081-00	s	METAL, CHIP 22k 5% 1/10W	
R51	1-216-121-91	s	METAL, CHIP 1M 5% 1/10W	
R52	1-216-121-91	s	METAL, CHIP 1M 5% 1/10W	
R53	1-216-121-91	s	METAL, CHIP 1M 5% 1/10W	
R54	1-216-121-91	s	METAL, CHIP 1M 5% 1/10W	
R56	1-216-009-00	s	METAL, CHIP 22 5% 1/10W	
R57	1-208-822-11	s	METAL, CHIP 47k 0.5% 1/10W	
R58	1-208-774-11	s	METAL, CHIP 470 5% 1/10W	
R59	1-216-622-11	s	METAL, CHIP 62 0.5% 1/10W	
R60	1-216-678-11	s	METAL, CHIP 13k 0.5% 1/10W	
R61	1-216-673-11	s	METAL, CHIP 8.2k 0.5% 1/10W	
R62	1-216-652-11	s	METAL, CHIP 1.1k 0.5% 1/10W	
R63	1-216-622-11	s	METAL, CHIP 62 0.5% 1/10W	
R64	1-208-784-11	s	METAL, CHIP 1.2k 0.5% 1/10W	
R65	1-216-676-11	s	METAL, CHIP 11k 0.5% 1/10W	
R66	1-216-677-11	s	METAL, CHIP 12k 0.5% 1/10W	
R67	1-208-785-11	s	METAL, CHIP 1.3k 0.5% 1/10W	
R68	1-215-493-00	s	METAL 1M 1% 1/6W	
R69	1-216-666-11	s	METAL, CHIP 4.3k 0.5% 1/10W	
R70	1-208-822-11	s	METAL, CHIP 47k 0.5% 1/10W	
R71	1-208-806-11	s	METAL, CHIP 10k 0.5% 1/10W	
R72	1-216-073-00	s	METAL, CHIP 10k 5% 1/10W	
R73	1-216-081-00	s	METAL, CHIP 22k 5% 1/10W	
R74	1-216-049-91	s	METAL, CHIP 1k 5% 1/10W	
R75	1-216-081-00	s	METAL, CHIP 22k 5% 1/10W	

Note: In this list * marked parts are design changed.
Refer to pages 18-29 to 18-31 for applicable serial numbers.

(AP-31BP BOARD(for UVW-1400P, PAL))

Ref. No. or Q'ty	Part No.	SP	Description
R76	1-216-081-00	s	METAL, CHIP 22k 5% 1/10W
R77	1-216-699-11	s	METAL, CHIP 100k 0.5% 1/10W
R78	1-208-817-11	s	METAL, CHIP 30k 0.5% 1/10W
R79	1-216-081-00	s	METAL, CHIP 22k 5% 1/10W
R80	1-216-049-91	s	METAL, CHIP 1k 5% 1/10W
R81	1-208-810-11	s	METAL, CHIP 15k 0.5% 1/10W
R82	1-216-659-11	s	METAL, CHIP 2.2k 0.5% 1/10W
R83	1-208-789-11	s	METAL, CHIP 2k 0.5% 1/10W
R84	1-216-677-11	s	METAL, CHIP 12k 0.5% 1/10W
R85	1-216-645-11	s	METAL, CHIP 560 0.5% 1/10W
R86	1-216-121-91	s	METAL, CHIP 1M 5% 1/10W
R87	1-208-814-11	s	METAL, CHIP 22k 0.5% 1/10W
R88	1-208-803-11	s	METAL, CHIP 7.5k 0.5% 1/10W
R89	1-216-045-00	s	METAL, CHIP 680 5% 1/10W
R90	1-216-674-11	s	METAL, CHIP 9.1k 0.5% 1/10W
R91	1-208-812-11	s	METAL, CHIP 18k 0.5% 1/10W
R92	1-216-657-11	s	METAL, CHIP 1.8k 0.5% 1/10W
R93	1-216-121-91	s	METAL, CHIP 1M 5% 1/10W
R94	1-216-121-91	s	METAL, CHIP 1M 5% 1/10W
R95	1-208-822-11	s	METAL, CHIP 47k 0.5% 1/10W
R96	1-208-814-11	s	METAL, CHIP 22k 0.5% 1/10W
R97	1-216-659-11	s	METAL, CHIP 2.2k 0.5% 1/10W
R98	1-216-659-11	s	METAL, CHIP 2.2k 0.5% 1/10W
R99	1-216-073-00	s	METAL, CHIP 10k 5% 1/10W
R100	1-216-097-91	s	METAL, CHIP 100k 5% 1/10W
R101	1-216-073-00	s	METAL, CHIP 10k 5% 1/10W
R102	1-216-121-91	s	METAL, CHIP 1M 5% 1/10W
R103	1-216-073-00	s	METAL, CHIP 10k 5% 1/10W
R104	1-216-073-00	s	METAL, CHIP 10k 5% 1/10W
R105	1-216-121-91	s	METAL, CHIP 1M 5% 1/10W
R106	1-216-069-00	s	METAL, CHIP 6.8k 5% 1/10W
R107	1-216-073-00	s	METAL, CHIP 10k 5% 1/10W
R108	1-208-799-11	s	METAL, CHIP 5.1k 0.5% 1/10W
R109	1-216-663-11	s	METAL, CHIP 3.3k 0.5% 1/10W
R110	1-216-650-11	s	METAL, CHIP 910 0.5% 1/10W
R111	1-216-663-11	s	METAL, CHIP 3.3k 0.5% 1/10W
R112	1-216-073-00	s	METAL, CHIP 10k 5% 1/10W
R113	1-216-667-11	s	METAL, CHIP 4.7k 0.5% 1/10W
R114	1-216-033-00	s	METAL, CHIP 220 5% 1/10W
R115	1-216-067-00	s	METAL, CHIP 5.6k 5% 1/10W
R116	1-216-067-00	s	METAL, CHIP 5.6k 5% 1/10W
R117	1-208-810-11	s	METAL, CHIP 15k 0.5% 1/10W
R118	1-247-807-31	s	CARBON 100 5% 1/4W
R119	⚠ 1-216-399-00	s	WIREWOUND 6.8 10% 3W
R120	⚠ 1-216-399-00	s	WIREWOUND 6.8 10% 3W
R121	1-247-807-31	s	CARBON 100 5% 1/4W
R122	1-216-121-91	s	METAL, CHIP 1M 5% 1/10W
R123	1-249-389-11	s	CARBON 4.7 5% 1/4W
R124	1-216-121-91	s	METAL, CHIP 1M 5% 1/10W
R125	1-216-057-00	s	METAL, CHIP 2.2k 5% 1/10W
R126	1-216-075-00	s	METAL, CHIP 12k 5% 1/10W
R127	1-216-081-00	s	METAL, CHIP 22k 5% 1/10W
R128	1-216-025-91	s	METAL, CHIP 100 5% 1/10W
R129	1-216-121-91	s	METAL, CHIP 1M 5% 1/10W
R130	1-216-033-00	s	METAL, CHIP 220 5% 1/10W
R131	1-216-065-00	s	METAL, CHIP 4.7k 5% 1/10W
R132	1-216-081-00	s	METAL, CHIP 22k 5% 1/10W
R133	1-216-095-00	s	METAL, CHIP 82k 5% 1/10W
R134	1-216-676-11	s	METAL, CHIP 11k 0.5% 1/10W

(AP-31BP BOARD(for UVW-1400P, PAL))

Ref. No. or Q'ty	Part No.	SP	Description	
R135	1-216-057-00	s	METAL, CHIP 2.2k 5% 1/10W	
R136	1-216-678-11	s	METAL, CHIP 13k 0.5% 1/10W	
R137	1-216-025-91	s	METAL, CHIP 100 5% 1/10W	
R138	1-216-073-00	s	METAL, CHIP 10k 5% 1/10W	
R139	1-216-073-00	s	METAL, CHIP 10k 5% 1/10W	
R140	1-216-073-00	s	METAL, CHIP 10k 5% 1/10W	
R141	1-216-684-91	s	METAL, CHIP 24k 0.5% 1/10W	
R142	1-216-025-91	s	METAL, CHIP 100 5% 1/10W	
R143	1-216-073-00	s	METAL, CHIP 10k 5% 1/10W	
R144	1-216-073-00	s	METAL, CHIP 10k 5% 1/10W	
R145-154	1-216-097-91	s	METAL, CHIP 100k 5% 1/10W	
R155	1-216-081-00	s	METAL, CHIP 22k 5% 1/10W	
R156	1-216-081-00	s	METAL, CHIP 22k 5% 1/10W	
R157	1-216-081-00	s	METAL, CHIP 22k 5% 1/10W	
R158	1-216-081-00	s	METAL, CHIP 22k 5% 1/10W	
R159	1-216-073-00	s	METAL, CHIP 10k 5% 1/10W	
R160	1-216-049-91	s	METAL, CHIP 1k 5% 1/10W	
R161	1-216-063-91	s	METAL, CHIP 3.9k 5% 1/10W	
R162	1-216-089-91	s	METAL, CHIP 47k 5% 1/10W	
R163	1-216-053-00	s	METAL, CHIP 1.5k 5% 1/10W	
R164	1-216-059-00	s	METAL, CHIP 2.7k 5% 1/10W	
R165	1-216-071-00	s	METAL, CHIP 8.2k 5% 1/10W	
R167	1-216-295-91	s	RES, CHIP 0	
R168	1-216-073-00	s	METAL, CHIP 10k 5% 1/10W	
R169	1-216-049-91	s	METAL, CHIP 1k 5% 1/10W	
R170	1-216-063-91	s	METAL, CHIP 3.9k 5% 1/10W	
R171	1-216-089-91	s	METAL, CHIP 47k 5% 1/10W	
R172	1-216-053-00	s	METAL, CHIP 1.5k 5% 1/10W	
R173	1-216-059-00	s	METAL, CHIP 2.7k 5% 1/10W	
R174	1-216-071-00	s	METAL, CHIP 8.2k 5% 1/10W	
R175	1-216-121-91	s	METAL, CHIP 1M 5% 1/10W	
R176	1-216-121-91	s	METAL, CHIP 1M 5% 1/10W	
R177	1-216-025-91	s	METAL, CHIP 100 5% 1/10W	
R178	1-216-073-00	s	METAL, CHIP 10k 5% 1/10W	
R179	1-216-664-11	s	METAL, CHIP 3.6k 0.5% 1/10W	
R180	1-216-073-00	s	METAL, CHIP 10k 5% 1/10W	
R181	1-216-073-00	s	METAL, CHIP 10k 5% 1/10W	
R182	1-216-646-11	s	METAL, CHIP 620 0.5% 1/10W	
R183	1-216-073-00	s	METAL, CHIP 10k 5% 1/10W	
R184	1-216-073-00	s	METAL, CHIP 10k 5% 1/10W	
R186	1-216-095-00	s	METAL, CHIP 82k 5% 1/10W	
R187	1-208-799-11	s	METAL, CHIP 5.1k 0.5% 1/10W	
R188	1-216-085-00	s	METAL, CHIP 33k 5% 1/10W	
*R189	1-216-295-91	s	RES, CHIP 0	*9
*R190	1-208-814-11	s	METAL, CHIP 22k 0.5% 1/10W	*9
R201	1-216-603-11	s	METAL, CHIP 10 0.5% 1/10W	
R202	1-216-049-91	s	METAL, CHIP 1k 5% 1/10W	
*R203	1-216-057-00	s	METAL, CHIP 2.2k 5% 1/10W	*16
	1-216-051-00	s	METAL, CHIP 1.2k 5% 1/10W	*17
*R204	1-216-057-00	s	METAL, CHIP 2.2k 5% 1/10W	*16
	1-216-051-00	s	METAL, CHIP 1.2k 5% 1/10W	*17
R205	1-216-097-91	s	METAL, CHIP 100k 5% 1/10W	
*R206	1-216-097-00	s	METAL, CHIP 100k 5% 1/10W	*8
R208	1-216-105-91	s	METAL, CHIP 220k 5% 1/10W	
R209	1-216-626-11	s	METAL, CHIP 91 0.5% 1/10W	
*R210	1-216-651-11	s	METAL, CHIP 1k 0.5% 1/10W	*16
	1-208-774-11	s	METAL, CHIP 470 5% 1/10W	*17

Note: In this list * marked parts are design changed.
Refer to pages 18-29 to 18-31 for applicable serial numbers.

(AP-31BP BOARD(for UVW-1400P, PAL))

Ref. No. or Q'ty	Part No.	SP	Description
R211	1-216-073-00	s	METAL, CHIP 10k 5% 1/10W
R212	1-216-073-00	s	METAL, CHIP 10k 5% 1/10W
R213	1-216-659-11	s	METAL, CHIP 2.2k 0.5% 1/10W
R214	1-216-049-91	s	METAL, CHIP 1k 5% 1/10W
R215	1-208-806-11	s	METAL, CHIP 10k 0.5% 1/10W
R216	1-216-009-00	s	METAL, CHIP 22 5% 1/10W
R217	1-216-073-00	s	METAL, CHIP 10k 5% 1/10W
R219-223	1-216-073-00	s	METAL, CHIP 10k 5% 1/10W
R224	1-216-049-91	s	METAL, CHIP 1k 5% 1/10W
R225	1-216-073-00	s	METAL, CHIP 10k 5% 1/10W
R226	1-216-073-00	s	METAL, CHIP 10k 5% 1/10W
R227	1-216-085-00	s	METAL, CHIP 33k 5% 1/10W
R228	1-216-085-00	s	METAL, CHIP 33k 5% 1/10W
R230	1-208-806-11	s	METAL, CHIP 10k 0.5% 1/10W
R231	1-216-041-00	s	METAL, CHIP 470 5% 1/10W
R232	1-216-642-11	s	METAL, CHIP 430 0.5% 1/10W
R233	1-208-806-11	s	METAL, CHIP 10k 0.5% 1/10W
R234	1-208-822-11	s	METAL, CHIP 47k 0.5% 1/10W
R235	1-208-806-11	s	METAL, CHIP 10k 0.5% 1/10W
R236	1-208-814-11	s	METAL, CHIP 22k 0.5% 1/10W
R237	1-215-484-00	s	METAL 430k 1% 1/6W
R238	1-215-471-00	s	METAL 120k 1% 1/6W
R239	1-215-484-00	s	METAL 430k 1% 1/6W
R240	1-216-689-11	s	METAL, CHIP 39k 0.5% 1/10W
R241	1-208-824-11	s	METAL, CHIP 56k 0.5% 1/10W
R242	1-216-695-11	s	METAL, CHIP 68k 0.5% 1/10W
R244	1-215-461-00	s	METAL 47k 1% 1/6W
R245	1-215-466-00	s	METAL 75k 1% 1/6W
R246	1-208-812-11	s	METAL, CHIP 18k 0.5% 1/10W
R247	1-208-814-11	s	METAL, CHIP 22k 0.5% 1/10W
R248	1-216-089-91	s	METAL, CHIP 47k 5% 1/10W
R249	1-216-071-00	s	METAL, CHIP 8.2k 5% 1/10W
R250	1-216-081-00	s	METAL, CHIP 22k 5% 1/10W
R251	1-216-121-91	s	METAL, CHIP 1M 5% 1/10W
R252	1-216-121-91	s	METAL, CHIP 1M 5% 1/10W
R253	1-216-121-91	s	METAL, CHIP 1M 5% 1/10W
R254	1-216-121-91	s	METAL, CHIP 1M 5% 1/10W
R255	1-216-009-00	s	METAL, CHIP 22 5% 1/10W
R256	1-208-822-11	s	METAL, CHIP 47k 0.5% 1/10W
R257	1-208-774-11	s	METAL, CHIP 470 5% 1/10W
R258	1-216-622-11	s	METAL, CHIP 62 0.5% 1/10W
R259	1-216-678-11	s	METAL, CHIP 13k 0.5% 1/10W
R260	1-216-673-11	s	METAL, CHIP 8.2k 0.5% 1/10W
R261	1-216-652-11	s	METAL, CHIP 1.1k 0.5% 1/10W
R262	1-216-622-11	s	METAL, CHIP 62 0.5% 1/10W
R263	1-208-784-11	s	METAL, CHIP 1.2k 0.5% 1/10W
R264	1-216-676-11	s	METAL, CHIP 11k 0.5% 1/10W
R265	1-216-677-11	s	METAL, CHIP 12k 0.5% 1/10W
R266	1-208-785-11	s	METAL, CHIP 1.3k 0.5% 1/10W
R267	1-215-493-00	s	METAL 1M 1% 1/6W
R268	1-216-666-11	s	METAL, CHIP 4.3k 0.5% 1/10W
R269	1-208-822-11	s	METAL, CHIP 47k 0.5% 1/10W
R270	1-208-806-11	s	METAL, CHIP 10k 0.5% 1/10W
R271	1-216-073-00	s	METAL, CHIP 10k 5% 1/10W
R272	1-216-049-91	s	METAL, CHIP 1k 5% 1/10W
R273	1-216-081-00	s	METAL, CHIP 22k 5% 1/10W
R274	1-216-081-00	s	METAL, CHIP 22k 5% 1/10W
R275	1-208-810-11	s	METAL, CHIP 15k 0.5% 1/10W
R276	1-216-659-11	s	METAL, CHIP 2.2k 0.5% 1/10W

(AP-31BP BOARD(for UVW-1400P, PAL))

Ref. No. or Q'ty	Part No.	SP	Description
R277	1-208-789-11	s	METAL, CHIP 2k 0.5% 1/10W
R278	1-216-677-11	s	METAL, CHIP 12k 0.5% 1/10W
R279	1-216-645-11	s	METAL, CHIP 560 0.5% 1/10W
R280	1-216-121-91	s	METAL, CHIP 1M 5% 1/10W
R281	1-208-814-11	s	METAL, CHIP 22k 0.5% 1/10W
R282	1-208-803-11	s	METAL, CHIP 7.5k 0.5% 1/10W
R283	1-216-045-00	s	METAL, CHIP 680 5% 1/10W
R284	1-216-674-11	s	METAL, CHIP 9.1k 0.5% 1/10W
R285	1-208-812-11	s	METAL, CHIP 18k 0.5% 1/10W
R286	1-216-657-11	s	METAL, CHIP 1.8k 0.5% 1/10W
R287	1-216-121-91	s	METAL, CHIP 1M 5% 1/10W
R288	1-216-121-91	s	METAL, CHIP 1M 5% 1/10W
R289	1-208-822-11	s	METAL, CHIP 47k 0.5% 1/10W
R290	1-208-814-11	s	METAL, CHIP 22k 0.5% 1/10W
R291	1-216-659-11	s	METAL, CHIP 2.2k 0.5% 1/10W
R292	1-216-659-11	s	METAL, CHIP 2.2k 0.5% 1/10W
R293	1-216-073-00	s	METAL, CHIP 10k 5% 1/10W
R294	1-216-097-91	s	METAL, CHIP 100k 5% 1/10W
R295	1-216-073-00	s	METAL, CHIP 10k 5% 1/10W
R296	1-216-121-91	s	METAL, CHIP 1M 5% 1/10W
R297	1-216-073-00	s	METAL, CHIP 10k 5% 1/10W
R298	1-216-073-00	s	METAL, CHIP 10k 5% 1/10W
R299	1-216-121-91	s	METAL, CHIP 1M 5% 1/10W
R300	1-216-069-00	s	METAL, CHIP 6.8k 5% 1/10W
R301	1-216-073-00	s	METAL, CHIP 10k 5% 1/10W
R302	1-208-799-11	s	METAL, CHIP 5.1k 0.5% 1/10W
R303	1-216-663-11	s	METAL, CHIP 3.3k 0.5% 1/10W
R304	1-216-650-11	s	METAL, CHIP 910 0.5% 1/10W
R305	1-216-663-11	s	METAL, CHIP 3.3k 0.5% 1/10W
R306	1-216-073-00	s	METAL, CHIP 10k 5% 1/10W
R307	1-216-667-11	s	METAL, CHIP 4.7k 0.5% 1/10W
R308	1-216-033-00	s	METAL, CHIP 220 5% 1/10W
R309	1-216-067-00	s	METAL, CHIP 5.6k 5% 1/10W
R310	1-216-067-00	s	METAL, CHIP 5.6k 5% 1/10W
R311	1-208-810-11	s	METAL, CHIP 15k 0.5% 1/10W
R312	1-247-807-31	s	CARBON 100 5% 1/4W
R313 ⚠	1-216-399-00	s	WIREWOUND 6.8 10% 3W
R314 ⚠	1-216-399-00	s	WIREWOUND 6.8 10% 3W
R315	1-247-807-31	s	CARBON 100 5% 1/4W
R316	1-216-121-91	s	METAL, CHIP 1M 5% 1/10W
R317	1-249-389-11	s	CARBON 4.7 5% 1/4W
R318	1-216-121-91	s	METAL, CHIP 1M 5% 1/10W
R319	1-216-057-00	s	METAL, CHIP 2.2k 5% 1/10W
R320	1-216-075-00	s	METAL, CHIP 12k 5% 1/10W
R321	1-216-081-00	s	METAL, CHIP 22k 5% 1/10W
R322	1-216-025-91	s	METAL, CHIP 100 5% 1/10W
R323	1-216-121-91	s	METAL, CHIP 1M 5% 1/10W
R324	1-216-033-00	s	METAL, CHIP 220 5% 1/10W
R325	1-216-065-00	s	METAL, CHIP 4.7k 5% 1/10W
R326	1-216-081-00	s	METAL, CHIP 22k 5% 1/10W
R327	1-216-095-00	s	METAL, CHIP 82k 5% 1/10W
R328	1-216-676-11	s	METAL, CHIP 11k 0.5% 1/10W
R329	1-216-057-00	s	METAL, CHIP 2.2k 5% 1/10W
R330	1-216-678-11	s	METAL, CHIP 13k 0.5% 1/10W
R331	1-216-025-91	s	METAL, CHIP 100 5% 1/10W
R332	1-216-073-00	s	METAL, CHIP 10k 5% 1/10W
R333	1-216-073-00	s	METAL, CHIP 10k 5% 1/10W
R334	1-216-073-00	s	METAL, CHIP 10k 5% 1/10W
R335	1-216-684-91	s	METAL, CHIP 24k 0.5% 1/10W

Note: In this list * marked parts are design changed.
Refer to pages 18-29 to 18-31 for applicable serial numbers.

(AP-31BP BOARD(for UVW-1400P, PAL))

Ref. No. or Q'ty	Part No.	SP	Description	
R336	1-216-025-91	s	METAL, CHIP 100 5% 1/10W	
R337	1-216-073-00	s	METAL, CHIP 10k 5% 1/10W	
R338	1-216-073-00	s	METAL, CHIP 10k 5% 1/10W	
R339	1-216-025-91	s	METAL, CHIP 100 5% 1/10W	
R341	1-216-095-00	s	METAL, CHIP 82k 5% 1/10W	
R342	1-216-073-00	s	METAL, CHIP 10k 5% 1/10W	
R344	1-216-295-91	s	RES, CHIP 0	
R345	1-216-121-91	s	METAL, CHIP 1M 5% 1/10W	
R346	1-216-121-91	s	METAL, CHIP 1M 5% 1/10W	
R347	1-216-085-00	s	METAL, CHIP 33k 5% 1/10W	
*R350	1-216-295-91	s	RES, CHIP 0	*9
*R351	1-208-814-11	s	METAL, CHIP 22k 0.5% 1/10W	*9
R387	1-208-799-11	s	METAL, CHIP 5.1k 0.5% 1/10W	
R400	1-216-603-11	s	METAL, CHIP 10 0.5% 1/10W	
R402	1-216-295-91	s	RES, CHIP 0	
R403	1-216-073-00	s	METAL, CHIP 10k 5% 1/10W	
R404	1-216-073-00	s	METAL, CHIP 10k 5% 1/10W	
R405	1-216-049-91	s	METAL, CHIP 1k 5% 1/10W	
R406	1-216-033-00	s	METAL, CHIP 220 5% 1/10W	
R407	1-216-121-91	s	METAL, CHIP 1M 5% 1/10W	
R408	1-216-053-00	s	METAL, CHIP 1.5k 5% 1/10W	
R409	1-216-089-91	s	METAL, CHIP 47k 5% 1/10W	
R410	1-216-053-00	s	METAL, CHIP 1.5k 5% 1/10W	
R411	1-216-089-91	s	METAL, CHIP 47k 5% 1/10W	
R412	1-216-049-91	s	METAL, CHIP 1k 5% 1/10W	
R413	1-216-067-00	s	METAL, CHIP 5.6k 5% 1/10W	
R414	1-216-089-91	s	METAL, CHIP 47k 5% 1/10W	
R415	1-216-089-91	s	METAL, CHIP 47k 5% 1/10W	
R416	1-216-057-00	s	METAL, CHIP 2.2k 5% 1/10W	
R417	1-216-121-91	s	METAL, CHIP 1M 5% 1/10W	
R418	1-216-049-91	s	METAL, CHIP 1k 5% 1/10W	
R419	1-216-073-00	s	METAL, CHIP 10k 5% 1/10W	
R420	1-216-113-00	s	METAL, CHIP 470k 5% 1/10W	
R421	1-216-025-91	s	METAL, CHIP 100 5% 1/10W	
R422	1-216-067-00	s	METAL, CHIP 5.6k 5% 1/10W	
R423	1-216-089-91	s	METAL, CHIP 47k 5% 1/10W	
R424	1-216-073-00	s	METAL, CHIP 10k 5% 1/10W	
R425	1-216-065-00	s	METAL, CHIP 4.7k 5% 1/10W	
R426	1-216-065-00	s	METAL, CHIP 4.7k 5% 1/10W	
R427	1-216-025-91	s	METAL, CHIP 100 5% 1/10W	
R428	1-216-073-00	s	METAL, CHIP 10k 5% 1/10W	
*R500	1-215-403-00	s	METAL 180 1% 1/6W	*8
	1-216-633-11	s	METAL, CHIP 180 0.5% 1/10W	*9
*R501	1-215-403-00	s	METAL 180 1% 1/6W	*8
	1-216-633-11	s	METAL, CHIP 180 0.5% 1/10W	*9
*R502	1-249-417-11	s	CARBON 1k 5% 1/4W	*8
	1-216-049-91	s	METAL, CHIP 1k 5% 1/10W	*9
R600	1-216-025-91	s	METAL, CHIP 100 5% 1/10W	
R601	1-216-025-91	s	METAL, CHIP 100 5% 1/10W	
R602	1-247-855-11	s	CARBON 10k 5% 1/4W	
RV1	1-241-789-11	s	RES, ADJ METAL 220k	
*RV2	1-241-784-11	s	RES, ADJ METAL 4.7k	*16
	1-241-783-11	s	RES, ADJ METAL 2.2k	*17
RV3	1-241-783-11	s	RES, ADJ METAL 2.2k	
RV4	1-241-785-11	s	RES, ADJ METAL 10k	
*RV5	1-241-123-11	s	RES, ADJ CARBON 47k	*8
	1-241-786-11	s	RES, ADJ METAL 22k	*9

(AP-31BP BOARD(for UVW-1400P, PAL))

Ref. No. or Q'ty	Part No.	SP	Description	
RV201	1-241-789-11	s	RES, ADJ METAL 220k	
*RV202	1-241-784-11	s	RES, ADJ METAL 4.7k	*16
	1-241-783-11	s	RES, ADJ METAL 2.2k	*17
RV203	1-241-783-11	s	RES, ADJ METAL 2.2k	
RV204	1-241-785-11	s	RES, ADJ METAL 10k	
*RV205	1-241-123-11	s	RES, ADJ CARBON 47k	*8
	1-241-786-11	s	RES, ADJ METAL 22k	*9
S1	1-570-602-11	s	SWITCH, DIP 2-CKT	
S2	1-570-602-11	s	SWITCH, DIP 2-CKT	
S201	1-570-602-11	s	SWITCH, DIP 2-CKT	
S202	1-570-602-11	s	SWITCH, DIP 2-CKT	
*TH1	1-800-199-00	s	THERMISTOR S-1250	*8
	1-807-972-11	s	THERMISTOR SV-1715 1.25k	*9
*TH2	1-800-199-00	s	THERMISTOR S-1250	*8
	1-807-972-11	s	THERMISTOR SV-1715 1.25k	*9

Note: In this list * marked parts are design changed.
Refer to pages 18-29 to 18-31 for applicable serial numbers.

AP-34 BOARD(for UVW-1200, NTSC)

Ref. No.
or Q'ty Part No. SP Description

AP-34 board is used for UVW-1200.

1pc	A-8275-568-A	o	MOUNTED CIRCUIT BOARD, AP-34
1pc	7-682-903-21	s	SCREW, PWH 3x8
C1	1-163-033-91	s	CERAMIC, CHIP 0.022uF 50V
C2	1-163-033-91	s	CERAMIC, CHIP 0.022uF 50V
C3	1-163-033-91	s	CERAMIC, CHIP 0.022uF 50V
C4	1-163-033-91	s	CERAMIC, CHIP 0.022uF 50V
C5-12	1-126-933-11	s	ELECT 100uF 20% 16V
C13	1-163-227-11	s	CERAMIC, CHIP 10pF 5% 50V
C14	1-163-227-11	s	CERAMIC, CHIP 10pF 5% 50V
C15	1-163-227-11	s	CERAMIC, CHIP 10pF 5% 50V
C16	1-163-227-11	s	CERAMIC, CHIP 10pF 5% 50V
C17	1-164-004-11	s	CERAMIC, CHIP 0.1uF 10% 25V
C18	1-164-004-11	s	CERAMIC, CHIP 0.1uF 10% 25V
C19	1-164-004-11	s	CERAMIC, CHIP 0.1uF 10% 25V
C20	1-164-004-11	s	CERAMIC, CHIP 0.1uF 10% 25V
C101	1-163-033-91	s	CERAMIC, CHIP 0.022uF 50V
C102	1-163-033-91	s	CERAMIC, CHIP 0.022uF 50V
C103	1-126-933-11	s	ELECT 100uF 20% 16V
C104	1-126-933-11	s	ELECT 100uF 20% 16V
C106	1-126-933-11	s	ELECT 100uF 20% 16V
C107	1-126-933-11	s	ELECT 100uF 20% 16V
C108	1-126-933-11	s	ELECT 100uF 20% 16V
C109	1-163-033-91	s	CERAMIC, CHIP 0.022uF 50V
C110	1-163-033-91	s	CERAMIC, CHIP 0.022uF 50V
C111	1-163-033-91	s	CERAMIC, CHIP 0.022uF 50V
C112	1-163-033-91	s	CERAMIC, CHIP 0.022uF 50V
C113	1-126-933-11	s	ELECT 100uF 20% 16V
C114	1-126-933-11	s	ELECT 100uF 20% 16V
C115	1-163-989-11	s	CERAMIC, CHIP 0.033uF 10% 25V
C116	1-163-989-11	s	CERAMIC, CHIP 0.033uF 10% 25V
C117	1-164-004-11	s	CERAMIC, CHIP 0.1uF 10% 25V
C118	1-126-933-11	s	ELECT 100uF 20% 16V
C119	1-126-964-11	s	ELECT 10uF 20% 50V
C120	1-163-033-91	s	CERAMIC, CHIP 0.022uF 50V
C121	1-163-033-91	s	CERAMIC, CHIP 0.022uF 50V
C122	1-126-933-11	s	ELECT 100uF 20% 16V
C123	1-163-033-91	s	CERAMIC, CHIP 0.022uF 50V
C124	1-163-033-91	s	CERAMIC, CHIP 0.022uF 50V
C125	1-126-933-11	s	ELECT 100uF 20% 16V
C126	1-126-933-11	s	ELECT 100uF 20% 16V
C127	1-126-964-11	s	ELECT 10uF 20% 50V
C128	1-163-239-11	s	CERAMIC, CHIP 33pF 5% 50V
C129	1-163-033-91	s	CERAMIC, CHIP 0.022uF 50V
C130	1-126-933-11	s	ELECT 100uF 20% 16V
C131	1-126-964-11	s	ELECT 10uF 20% 50V
C132	1-163-989-11	s	CERAMIC, CHIP 0.033uF 10% 25V
C133	1-163-133-00	s	CERAMIC, CHIP 470pF 5% 50V
C135	1-163-125-00	s	CERAMIC, CHIP 220pF 5% 50V
C201	1-163-121-00	s	CERAMIC, CHIP 150pF 5% 50V
C202	1-163-243-11	s	CERAMIC, CHIP 47pF 5% 50V
C203	1-163-113-00	s	CERAMIC, CHIP 68pF 5% 50V
C204	1-163-127-00	s	CERAMIC, CHIP 270pF 5% 50V
C205	1-130-485-00	s	MYLAR 0.015uF 5% 50V
C206	1-126-933-11	s	ELECT 100uF 20% 16V
C207	1-163-125-00	s	CERAMIC, CHIP 220pF 5% 50V
C208	1-126-964-11	s	ELECT 10uF 20% 50V
C211	1-126-964-11	s	ELECT 10uF 20% 50V

(AP-34 BOARD(for UVW-1200, NTSC))

Ref. No.
or Q'ty Part No. SP Description

C212	1-128-551-11	s	ELECT 22uF 20% 50V
C213	1-128-551-11	s	ELECT 22uF 20% 50V
C214	1-130-498-00	s	MYLAR 0.18uF 5% 50V
C215	1-126-964-11	s	ELECT 10uF 20% 50V
C216-221	1-130-487-00	s	MYLAR 0.022uF 5% 50V
C222	1-126-964-11	s	ELECT 10uF 20% 50V
C223	1-126-964-11	s	ELECT 10uF 20% 50V
C224	1-163-243-11	s	CERAMIC, CHIP 47pF 5% 50V
C225	1-130-483-00	s	MYLAR 0.01uF 5% 50V
C226	1-163-275-11	s	CERAMIC, CHIP 0.001uF 5% 50V
C227	1-163-275-11	s	CERAMIC, CHIP 0.001uF 5% 50V
C228	1-163-275-11	s	CERAMIC, CHIP 0.001uF 5% 50V
C229	1-163-275-11	s	CERAMIC, CHIP 0.001uF 5% 50V
C230	1-130-483-00	s	MYLAR 0.01uF 5% 50V
C231	1-163-139-00	s	CERAMIC, CHIP 820pF 5% 50V
C232	1-163-243-11	s	CERAMIC, CHIP 47pF 5% 50V
C233	1-130-483-00	s	MYLAR 0.01uF 5% 50V
C234	1-164-232-11	s	CERAMIC, CHIP 0.01uF 10% 100V
C235	1-164-232-11	s	CERAMIC, CHIP 0.01uF 10% 100V
C236	1-124-925-11	s	ELECT 2.2uF 20% 100V
C237	1-164-004-11	s	CERAMIC, CHIP 0.1uF 10% 25V
C238	1-107-498-11	s	FILM, CHIP 0.0022uF 2% 50V
C239	1-107-498-11	s	FILM, CHIP 0.0022uF 2% 50V
C240	1-107-499-11	s	FILM, CHIP 0.0039uF 2% 16V
C241	1-131-345-00	s	TANTALUM 0.47uF 10% 35V
C242	1-130-497-00	s	MYLAR 0.15uF 5% 50V
C243	1-124-925-11	s	ELECT 2.2uF 20% 100V
C244	1-104-553-11	s	FILM, CHIP 0.015uF 5% 16V
C245	1-130-499-00	s	MYLAR 0.22uF 5% 50V
C246	1-164-344-11	s	CERAMIC, CHIP 0.068uF 10% 25V
C247	1-104-560-11	s	FILM, CHIP 0.056uF 5% 16V
C248	1-124-925-11	s	ELECT 2.2uF 20% 100V
C249	1-107-553-11	s	FILM, CHIP 0.0056uF 2% 16V
C250	1-104-551-11	s	FILM, CHIP 0.01uF 5% 16V
C251	1-163-251-11	s	CERAMIC, CHIP 100pF 5% 50V
C252	1-163-251-11	s	CERAMIC, CHIP 100pF 5% 50V
C253	1-126-947-11	s	ELECT 47uF 20% 35V
C254	1-126-947-11	s	ELECT 47uF 20% 35V
C255	1-163-263-11	s	CERAMIC, CHIP 330pF 5% 50V
C256	1-163-235-11	s	CERAMIC, CHIP 22pF 5% 50V
C257	1-126-964-11	s	ELECT 10uF 20% 50V
C258	1-126-964-11	s	ELECT 10uF 20% 50V
C259	1-126-926-11	s	ELECT 1000uF 20% 10V
C260	1-126-926-11	s	ELECT 1000uF 20% 10V
C261	1-126-926-11	s	ELECT 1000uF 20% 10V
C262	1-126-926-11	s	ELECT 1000uF 20% 10V
C263	1-163-235-11	s	CERAMIC, CHIP 22pF 5% 50V
C264	1-126-926-11	s	ELECT 1000uF 20% 10V
C265	1-164-004-11	s	CERAMIC, CHIP 0.1uF 10% 25V
C266	1-163-809-11	s	CERAMIC, CHIP 0.047uF 10% 25V
C267	1-126-926-11	s	ELECT 1000uF 20% 10V
C269	1-126-964-11	s	ELECT 10uF 20% 50V
C401	1-163-121-00	s	CERAMIC, CHIP 150pF 5% 50V
C402	1-163-243-11	s	CERAMIC, CHIP 47pF 5% 50V
C403	1-163-113-00	s	CERAMIC, CHIP 68pF 5% 50V
C404	1-163-127-00	s	CERAMIC, CHIP 270pF 5% 50V
C405	1-130-485-00	s	MYLAR 0.015uF 5% 50V
C406	1-126-933-11	s	ELECT 100uF 20% 16V
C407	1-163-125-00	s	CERAMIC, CHIP 220pF 5% 50V

Note: In this list * marked parts are design changed.
Refer to pages 18-29 to 18-31 for applicable serial numbers.

(AP-34 BOARD(for UVW-1200, NTSC))

Ref. No. or Q'ty	Part No.	SP	Description
C408	1-126-964-11	s	ELECT 10uF 20% 50V
C411	1-126-964-11	s	ELECT 10uF 20% 50V
C412	1-128-551-11	s	ELECT 22uF 20% 50V
C413	1-128-551-11	s	ELECT 22uF 20% 50V
C414	1-130-498-00	s	MYLAR 0.18uF 5% 50V
C415	1-126-964-11	s	ELECT 10uF 20% 50V
C416-421	1-130-487-00	s	MYLAR 0.022uF 5% 50V
C422	1-126-964-11	s	ELECT 10uF 20% 50V
C423	1-126-964-11	s	ELECT 10uF 20% 50V
C424	1-163-243-11	s	CERAMIC, CHIP 47pF 5% 50V
C425	1-130-483-00	s	MYLAR 0.01uF 5% 50V
C426	1-163-275-11	s	CERAMIC, CHIP 0.001uF 5% 50V
C427	1-163-275-11	s	CERAMIC, CHIP 0.001uF 5% 50V
C428	1-163-275-11	s	CERAMIC, CHIP 0.001uF 5% 50V
C429	1-163-275-11	s	CERAMIC, CHIP 0.001uF 5% 50V
C430	1-130-483-00	s	MYLAR 0.01uF 5% 50V
C431	1-163-139-00	s	CERAMIC, CHIP 820pF 5% 50V
C432	1-163-243-11	s	CERAMIC, CHIP 47pF 5% 50V
C433	1-130-483-00	s	MYLAR 0.01uF 5% 50V
C434	1-124-925-11	s	ELECT 2.2uF 20% 100V
C435	1-107-498-11	s	FILM, CHIP 0.0022uF 2% 50V
C436	1-107-498-11	s	FILM, CHIP 0.0022uF 2% 50V
C437	1-107-499-11	s	FILM, CHIP 0.0039uF 2% 16V
C438	1-131-345-00	s	TANTALUM 0.47uF 10% 35V
C439	1-130-497-00	s	MYLAR 0.15uF 5% 50V
C440	1-124-925-11	s	ELECT 2.2uF 20% 100V
C441	1-104-553-11	s	FILM, CHIP 0.015uF 5% 16V
C442	1-130-499-00	s	MYLAR 0.22uF 5% 50V
C443	1-164-344-11	s	CERAMIC, CHIP 0.068uF 10% 25V
C444	1-104-560-11	s	FILM, CHIP 0.056uF 5% 16V
C445	1-124-925-11	s	ELECT 2.2uF 20% 100V
C446	1-107-553-11	s	FILM, CHIP 0.0056uF 2% 16V
C447	1-104-551-11	s	FILM, CHIP 0.01uF 5% 16V
C448	1-163-251-11	s	CERAMIC, CHIP 100pF 5% 50V
C449	1-126-947-11	s	ELECT 47uF 20% 35V
C450	1-126-947-11	s	ELECT 47uF 20% 35V
C451	1-163-263-11	s	CERAMIC, CHIP 330pF 5% 50V
C452	1-163-235-11	s	CERAMIC, CHIP 22pF 5% 50V
C453	1-126-964-11	s	ELECT 10uF 20% 50V
C454	1-126-964-11	s	ELECT 10uF 20% 50V
C455	1-126-926-11	s	ELECT 1000uF 20% 10V
C456	1-126-926-11	s	ELECT 1000uF 20% 10V
C457	1-163-235-11	s	CERAMIC, CHIP 22pF 5% 50V
C458	1-126-926-11	s	ELECT 1000uF 20% 10V
C459	1-126-926-11	s	ELECT 1000uF 20% 10V
C460	1-163-809-11	s	CERAMIC, CHIP 0.047uF 10% 25V
C461	1-126-926-11	s	ELECT 1000uF 20% 10V
C462	1-164-004-11	s	CERAMIC, CHIP 0.1uF 10% 25V
C463	1-126-926-11	s	ELECT 1000uF 20% 10V
CN1	1-506-471-11	s	CONNECTOR 6P, MALE
CN2	1-506-480-11	s	CONNECTOR 15P, MALE
CN3	1-506-472-11	s	CONNECTOR 7P, MALE
CN4	1-564-009-11	o	CONNECTOR 10P, MALE
CN5	1-506-471-11	s	CONNECTOR 6P, MALE
CN6	1-506-471-11	s	CONNECTOR 6P, MALE
CN7	1-564-011-11	o	CONNECTOR 12P, MALE
CN8	1-564-002-11	s	CONNECTOR 3P, MALE
D101	8-719-941-23	s	DIODE DA204U

(AP-34 BOARD(for UVW-1200, NTSC))

Ref. No. or Q'ty	Part No.	SP	Description
D103	8-719-941-23	s	DIODE DA204U
D104	8-719-110-39	s	DIODE RD15ESB1
D201	8-719-123-85	s	DIODE 1SS304
D202	8-719-941-23	s	DIODE DA204U
D203	8-719-123-85	s	DIODE 1SS304
D204	8-719-123-85	s	DIODE 1SS304
D401	8-719-941-23	s	DIODE DA204U
D402	8-719-123-85	s	DIODE 1SS304
D403	8-719-123-85	s	DIODE 1SS304
IC1	1-810-335-11	s	HIC BP-024
IC2	1-810-335-11	s	HIC BP-024
IC3	1-810-335-11	s	HIC BP-024
IC4	1-810-335-11	s	HIC BP-024
IC101	8-759-172-41	s	IC L78M09T-TL
IC102	8-759-173-37	s	IC L79M09T-TL
IC103	8-759-701-25	s	IC NJM2068D-D
IC104	8-759-635-83	s	IC M51957BFP
IC105	8-759-172-41	s	IC L78M09T-TL
IC106	8-759-172-41	s	IC L78M09T-TL
IC107	8-759-173-37	s	IC L79M09T-TL
IC108	8-759-172-41	s	IC L78M09T-TL
IC109	8-759-701-25	s	IC NJM2068D-D
IC110	8-759-729-03	s	IC NJM2903D
IC201	8-759-701-25	s	IC NJM2068D-D
IC202	8-759-701-25	s	IC NJM2068D-D
IC203	8-759-701-25	s	IC NJM2068D-D
IC204	8-759-705-58	s	IC NJM4558D-D
IC205	8-759-705-58	s	IC NJM4558D-D
IC206	8-759-705-58	s	IC NJM4558D-D
IC209	8-759-705-58	s	IC NJM4558D-D
IC210	8-759-145-57	s	IC UPC4557C
IC211	8-759-145-57	s	IC UPC4557C
IC212	8-759-917-18	s	IC SN74HCU04AN
IC401	8-759-701-25	s	IC NJM2068D-D
IC402	8-759-701-25	s	IC NJM2068D-D
IC403	8-759-701-25	s	IC NJM2068D-D
IC404	8-759-705-58	s	IC NJM4558D-D
IC405	8-759-705-58	s	IC NJM4558D-D
IC406	8-759-705-58	s	IC NJM4558D-D
IC407	8-752-018-80	s	IC CX20188
IC408	8-759-705-58	s	IC NJM4558D-D
IC409	8-759-705-58	s	IC NJM4558D-D
IC410	8-759-145-57	s	IC UPC4557C
L101	1-410-470-11	s	INDUCTOR 10uH
L102	1-410-470-11	s	INDUCTOR 10uH
L103	1-412-533-21	s	INDUCTOR 47uH
L201	1-410-068-11	s	INDUCTOR 5.60mH
L202	1-408-617-31	s	INDUCTOR 150uH
L401	1-410-068-11	s	INDUCTOR 5.60mH
L402	1-408-617-31	s	INDUCTOR 150uH
PS101 ⚠	1-532-727-11	s	LINK, IC 0.25A
PS102 ⚠	1-532-727-11	s	LINK, IC 0.25A
PS103 ⚠	1-532-679-00	s	LINK, IC 0.6A
Q101	8-729-209-06	s	TRANSISTOR 2SC4213-A
Q201	8-729-209-06	s	TRANSISTOR 2SC4213-A
Q202	8-729-209-06	s	TRANSISTOR 2SC4213-A
Q203	8-729-209-06	s	TRANSISTOR 2SC4213-A
Q204	8-729-905-12	s	TRANSISTOR DTA144EU

Note: In this list * marked parts are design changed.
Refer to pages 18-29 to 18-31 for applicable serial numbers.

(AP-34 BOARD(for UVW-1200, NTSC))

Ref. No. or Q'ty	Part No.	SP	Description
Q205	8-729-140-93	s	TRANSISTOR 2SB733-34
Q206	8-729-423-93	s	TRANSISTOR 2SD2136-R(TA)
Q207	8-729-022-00	s	TRANSISTOR 2SB1416-R(TA)
Q208	8-729-021-98	s	TRANSISTOR 2SJ226-AZ
Q209	8-729-140-93	s	TRANSISTOR 2SB733-34
Q210	8-729-021-98	s	TRANSISTOR 2SJ226-AZ
Q212	8-729-905-18	s	TRANSISTOR DTC144EU
Q401	8-729-209-06	s	TRANSISTOR 2SC4213-A
Q402	8-729-209-06	s	TRANSISTOR 2SC4213-A
Q403	8-729-209-06	s	TRANSISTOR 2SC4213-A
Q404	8-729-423-93	s	TRANSISTOR 2SD2136-R(TA)
Q405	8-729-022-00	s	TRANSISTOR 2SB1416-R(TA)
Q406	8-729-021-98	s	TRANSISTOR 2SJ226-AZ
Q407	8-729-140-93	s	TRANSISTOR 2SB733-34
Q408	8-729-021-98	s	TRANSISTOR 2SJ226-AZ
R1	1-208-814-11	s	METAL, CHIP 22k 0.5% 1/10W
R2	1-208-814-11	s	METAL, CHIP 22k 0.5% 1/10W
R3	1-208-822-11	s	METAL, CHIP 47k 0.5% 1/10W
R4	1-208-822-11	s	METAL, CHIP 47k 0.5% 1/10W
R5	1-216-001-00	s	METAL, CHIP 10 5% 1/10W
R6	1-216-001-00	s	METAL, CHIP 10 5% 1/10W
R7	1-216-001-00	s	METAL, CHIP 10 5% 1/10W
R8	1-216-001-00	s	METAL, CHIP 10 5% 1/10W
R9	1-216-689-11	s	METAL, CHIP 39k 0.5% 1/10W
R10	1-216-689-11	s	METAL, CHIP 39k 0.5% 1/10W
R11	1-208-822-11	s	METAL, CHIP 47k 0.5% 1/10W
R12	1-208-822-11	s	METAL, CHIP 47k 0.5% 1/10W
R13	1-216-625-11	s	METAL, CHIP 82 0.5% 1/10W
R14	1-216-625-11	s	METAL, CHIP 82 0.5% 1/10W
R15	1-216-625-11	s	METAL, CHIP 82 0.5% 1/10W
R16	1-216-625-11	s	METAL, CHIP 82 0.5% 1/10W
R101	1-216-603-11	s	METAL, CHIP 10 0.5% 1/10W
R102	1-216-073-00	s	METAL, CHIP 10k 5% 1/10W
R103	1-216-073-00	s	METAL, CHIP 10k 5% 1/10W
R104	1-216-033-00	s	METAL, CHIP 220 5% 1/10W
R105	1-216-121-91	s	METAL, CHIP 1M 5% 1/10W
R106	1-216-089-91	s	METAL, CHIP 47k 5% 1/10W
R107	1-216-073-00	s	METAL, CHIP 10k 5% 1/10W
R108	1-216-089-91	s	METAL, CHIP 47k 5% 1/10W
R109	1-216-089-91	s	METAL, CHIP 47k 5% 1/10W
R110	1-216-659-11	s	METAL, CHIP 2.2k 0.5% 1/10W
R111	1-216-065-00	s	METAL, CHIP 4.7k 5% 1/10W
R112	1-216-121-91	s	METAL, CHIP 1M 5% 1/10W
R113	1-216-049-91	s	METAL, CHIP 1k 5% 1/10W
R114	1-216-067-00	s	METAL, CHIP 5.6k 5% 1/10W
R115	1-216-049-91	s	METAL, CHIP 1k 5% 1/10W
R116	1-216-073-00	s	METAL, CHIP 10k 5% 1/10W
R117	1-216-113-00	s	METAL, CHIP 470k 5% 1/10W
R118	1-216-025-91	s	METAL, CHIP 100 5% 1/10W
R119	1-216-067-00	s	METAL, CHIP 5.6k 5% 1/10W
R120	1-216-025-91	s	METAL, CHIP 100 5% 1/10W
R121	1-216-065-00	s	METAL, CHIP 4.7k 5% 1/10W
R122	1-216-073-00	s	METAL, CHIP 10k 5% 1/10W
R123	1-249-417-11	s	CARBON 1k 5% 1/4W
R201	1-216-001-00	s	METAL, CHIP 10 5% 1/10W
R202	1-216-097-91	s	METAL, CHIP 100k 5% 1/10W
R203	1-216-105-91	s	METAL, CHIP 220k 5% 1/10W
R204	1-216-626-11	s	METAL, CHIP 91 0.5% 1/10W
R205	1-216-651-11	s	METAL, CHIP 1k 0.5% 1/10W

(AP-34 BOARD(for UVW-1200, NTSC))

Ref. No. or Q'ty	Part No.	SP	Description
R206	1-216-659-11	s	METAL, CHIP 2.2k 0.5% 1/10W
R208	1-216-009-00	s	METAL, CHIP 22 5% 1/10W
R209	1-216-073-00	s	METAL, CHIP 10k 5% 1/10W
R210	1-216-073-00	s	METAL, CHIP 10k 5% 1/10W
R211	1-216-073-00	s	METAL, CHIP 10k 5% 1/10W
R212	1-216-073-00	s	METAL, CHIP 10k 5% 1/10W
R213	1-216-049-91	s	METAL, CHIP 1k 5% 1/10W
R214	1-216-073-00	s	METAL, CHIP 10k 5% 1/10W
R215	1-216-073-00	s	METAL, CHIP 10k 5% 1/10W
R216	1-216-633-11	s	METAL, CHIP 180 0.5% 1/10W
R217	1-208-806-11	s	METAL, CHIP 10k 0.5% 1/10W
R218	1-216-041-00	s	METAL, CHIP 470 5% 1/10W
R219	1-216-642-11	s	METAL, CHIP 430 0.5% 1/10W
R220	1-216-073-00	s	METAL, CHIP 10k 5% 1/10W
R221	1-208-822-11	s	METAL, CHIP 47k 0.5% 1/10W
R222	1-208-806-11	s	METAL, CHIP 10k 0.5% 1/10W
R223	1-208-814-11	s	METAL, CHIP 22k 0.5% 1/10W
R224	1-215-473-00	s	METAL 150k 1% 1/6W
R225	1-215-484-00	s	METAL 430k 1% 1/6W
R226	1-215-484-00	s	METAL 430k 1% 1/6W
R227	1-208-812-11	s	METAL, CHIP 18k 0.5% 1/10W
R228	1-208-810-11	s	METAL, CHIP 15k 0.5% 1/10W
R229	1-216-695-11	s	METAL, CHIP 68k 0.5% 1/10W
R230	1-215-472-00	s	METAL 130k 1% 1/6W
R231	1-215-488-00	s	METAL 620k 1% 1/6W
R232	1-215-464-00	s	METAL 62k 1% 1/6W
R233	1-208-812-11	s	METAL, CHIP 18k 0.5% 1/10W
R234	1-208-814-11	s	METAL, CHIP 22k 0.5% 1/10W
R235	1-208-774-11	s	METAL, CHIP 470 5% 1/10W
R236	1-216-622-11	s	METAL, CHIP 62 0.5% 1/10W
R237	1-216-678-11	s	METAL, CHIP 13k 0.5% 1/10W
R238	1-216-673-11	s	METAL, CHIP 8.2k 0.5% 1/10W
R239	1-216-652-11	s	METAL, CHIP 1.1k 0.5% 1/10W
R240	1-216-622-11	s	METAL, CHIP 62 0.5% 1/10W
R241	1-208-784-11	s	METAL, CHIP 1.2k 0.5% 1/10W
R242	1-216-676-11	s	METAL, CHIP 11k 0.5% 1/10W
R243	1-216-677-11	s	METAL, CHIP 12k 0.5% 1/10W
R244	1-208-785-11	s	METAL, CHIP 1.3k 0.5% 1/10W
R245	1-215-493-00	s	METAL 1M 1% 1/6W
R246	1-216-666-11	s	METAL, CHIP 4.3k 0.5% 1/10W
R247	1-208-822-11	s	METAL, CHIP 47k 0.5% 1/10W
R248	1-208-806-11	s	METAL, CHIP 10k 0.5% 1/10W
R249	1-216-009-00	s	METAL, CHIP 22 5% 1/10W
R250	1-216-073-00	s	METAL, CHIP 10k 5% 1/10W
R251	1-216-081-00	s	METAL, CHIP 22k 5% 1/10W
R252	1-216-049-91	s	METAL, CHIP 1k 5% 1/10W
R253	1-216-081-00	s	METAL, CHIP 22k 5% 1/10W
R254	1-216-081-00	s	METAL, CHIP 22k 5% 1/10W
R255	1-216-699-11	s	METAL, CHIP 100k 0.5% 1/10W
R256	1-208-817-11	s	METAL, CHIP 30k 0.5% 1/10W
R257	1-216-081-00	s	METAL, CHIP 22k 5% 1/10W
R258	1-216-049-91	s	METAL, CHIP 1k 5% 1/10W
R259	1-216-659-11	s	METAL, CHIP 2.2k 0.5% 1/10W
R260	1-208-789-11	s	METAL, CHIP 2k 0.5% 1/10W
R261	1-216-677-11	s	METAL, CHIP 12k 0.5% 1/10W
R262	1-216-645-11	s	METAL, CHIP 560 0.5% 1/10W
R263	1-216-121-91	s	METAL, CHIP 1M 5% 1/10W
R264	1-208-814-11	s	METAL, CHIP 22k 0.5% 1/10W
R265	1-208-803-11	s	METAL, CHIP 7.5k 0.5% 1/10W

Note: In this list * marked parts are design changed.
Refer to pages 18-29 to 18-31 for applicable serial numbers.

(AP-34 BOARD(for UVW-1200, NTSC))

Ref. No. or Q'ty	Part No.	SP	Description
R266	1-216-045-00	s	METAL, CHIP 680 5% 1/10W
R267	1-216-674-11	s	METAL, CHIP 9.1k 0.5% 1/10W
R268	1-208-812-11	s	METAL, CHIP 18k 0.5% 1/10W
R269	1-216-657-11	s	METAL, CHIP 1.8k 0.5% 1/10W
R270	1-216-069-00	s	METAL, CHIP 6.8k 5% 1/10W
R271	1-216-063-91	s	METAL, CHIP 3.9k 5% 1/10W
R272	1-208-799-11	s	METAL, CHIP 5.1k 0.5% 1/10W
R273	1-216-073-00	s	METAL, CHIP 10k 5% 1/10W
R274	1-216-069-00	s	METAL, CHIP 6.8k 5% 1/10W
R275	1-216-073-00	s	METAL, CHIP 10k 5% 1/10W
R276	1-216-095-00	s	METAL, CHIP 82k 5% 1/10W
R277	1-216-646-11	s	METAL, CHIP 620 0.5% 1/10W
R278	1-208-799-11	s	METAL, CHIP 5.1k 0.5% 1/10W
R279	1-216-663-11	s	METAL, CHIP 3.3k 0.5% 1/10W
R280	1-216-073-00	s	METAL, CHIP 10k 5% 1/10W
R281	1-216-073-00	s	METAL, CHIP 10k 5% 1/10W
R282	1-216-650-11	s	METAL, CHIP 910 0.5% 1/10W
R283	1-216-663-11	s	METAL, CHIP 3.3k 0.5% 1/10W
R284	1-216-073-00	s	METAL, CHIP 10k 5% 1/10W
R285	1-216-073-00	s	METAL, CHIP 10k 5% 1/10W
R286	1-216-667-11	s	METAL, CHIP 4.7k 0.5% 1/10W
R287	1-216-073-00	s	METAL, CHIP 10k 5% 1/10W
R288	1-216-033-00	s	METAL, CHIP 220 5% 1/10W
R289	1-216-067-00	s	METAL, CHIP 5.6k 5% 1/10W
R290	1-216-067-00	s	METAL, CHIP 5.6k 5% 1/10W
R291	1-216-025-91	s	METAL, CHIP 100 5% 1/10W
R292	1-208-810-11	s	METAL, CHIP 15k 0.5% 1/10W
R293	1-216-674-11	s	METAL, CHIP 9.1k 0.5% 1/10W
R294	1-247-807-31	s	CARBON 100 5% 1/4W
R295 ⚠	1-216-399-00	s	WIREWOUND 6.8 10% 3W
R296 ⚠	1-216-399-00	s	WIREWOUND 6.8 10% 3W
R297	1-247-807-31	s	CARBON 100 5% 1/4W
R298	1-216-073-00	s	METAL, CHIP 10k 5% 1/10W
R299	1-218-754-11	s	METAL, CHIP 120k 0.50% 1/10W
R300	1-216-025-91	s	METAL, CHIP 100 5% 1/10W
R301	1-216-121-91	s	METAL, CHIP 1M 5% 1/10W
R302	1-249-389-11	s	CARBON 4.7 5% 1/4W
R303	1-216-121-91	s	METAL, CHIP 1M 5% 1/10W
R304	1-216-073-00	s	METAL, CHIP 10k 5% 1/10W
R305	1-216-073-00	s	METAL, CHIP 10k 5% 1/10W
R306	1-216-097-91	s	METAL, CHIP 100k 5% 1/10W
R307	1-216-097-91	s	METAL, CHIP 100k 5% 1/10W
R308	1-216-097-91	s	METAL, CHIP 100k 5% 1/10W
R309	1-216-097-91	s	METAL, CHIP 100k 5% 1/10W
R310	1-216-097-91	s	METAL, CHIP 100k 5% 1/10W
R401	1-216-001-00	s	METAL, CHIP 10 5% 1/10W
R402	1-216-097-91	s	METAL, CHIP 100k 5% 1/10W
R403	1-216-105-91	s	METAL, CHIP 220k 5% 1/10W
R404	1-216-626-11	s	METAL, CHIP 91 0.5% 1/10W
R405	1-216-651-11	s	METAL, CHIP 1k 0.5% 1/10W
R406	1-216-659-11	s	METAL, CHIP 2.2k 0.5% 1/10W
R408	1-216-009-00	s	METAL, CHIP 22 5% 1/10W
R409	1-216-073-00	s	METAL, CHIP 10k 5% 1/10W
R410	1-216-073-00	s	METAL, CHIP 10k 5% 1/10W
R411	1-216-073-00	s	METAL, CHIP 10k 5% 1/10W
R412	1-216-073-00	s	METAL, CHIP 10k 5% 1/10W
R413	1-216-049-91	s	METAL, CHIP 1k 5% 1/10W
R414	1-216-073-00	s	METAL, CHIP 10k 5% 1/10W
R415	1-216-073-00	s	METAL, CHIP 10k 5% 1/10W

(AP-34 BOARD(for UVW-1200, NTSC))

Ref. No. or Q'ty	Part No.	SP	Description
R416	1-216-633-11	s	METAL, CHIP 180 0.5% 1/10W
R417	1-208-806-11	s	METAL, CHIP 10k 0.5% 1/10W
R418	1-216-041-00	s	METAL, CHIP 470 5% 1/10W
R419	1-216-642-11	s	METAL, CHIP 430 0.5% 1/10W
R420	1-216-073-00	s	METAL, CHIP 10k 5% 1/10W
R421	1-208-822-11	s	METAL, CHIP 47k 0.5% 1/10W
R422	1-208-806-11	s	METAL, CHIP 10k 0.5% 1/10W
R423	1-208-814-11	s	METAL, CHIP 22k 0.5% 1/10W
R424	1-215-473-00	s	METAL 150k 1% 1/6W
R425	1-215-485-00	s	METAL 470k 1% 1/6W
R426	1-215-485-00	s	METAL 470k 1% 1/6W
R427	1-208-814-11	s	METAL, CHIP 22k 0.5% 1/10W
R428	1-216-678-11	s	METAL, CHIP 13k 0.5% 1/10W
R429	1-216-695-11	s	METAL, CHIP 68k 0.5% 1/10W
R430	1-215-483-00	s	METAL 390k 1% 1/6W
R431	1-215-489-00	s	METAL 680k 1% 1/6W
R432	1-215-466-00	s	METAL 75k 1% 1/6W
R433	1-208-812-11	s	METAL, CHIP 18k 0.5% 1/10W
R434	1-208-814-11	s	METAL, CHIP 22k 0.5% 1/10W
R435	1-208-774-11	s	METAL, CHIP 470 5% 1/10W
R436	1-216-622-11	s	METAL, CHIP 62 0.5% 1/10W
R437	1-216-678-11	s	METAL, CHIP 13k 0.5% 1/10W
R438	1-216-673-11	s	METAL, CHIP 8.2k 0.5% 1/10W
R439	1-216-652-11	s	METAL, CHIP 1.1k 0.5% 1/10W
R440	1-216-622-11	s	METAL, CHIP 62 0.5% 1/10W
R441	1-208-784-11	s	METAL, CHIP 1.2k 0.5% 1/10W
R442	1-216-676-11	s	METAL, CHIP 11k 0.5% 1/10W
R443	1-216-677-11	s	METAL, CHIP 12k 0.5% 1/10W
R444	1-208-785-11	s	METAL, CHIP 1.3k 0.5% 1/10W
R445	1-215-493-00	s	METAL 1M 1% 1/6W
R446	1-216-666-11	s	METAL, CHIP 4.3k 0.5% 1/10W
R447	1-208-822-11	s	METAL, CHIP 47k 0.5% 1/10W
R448	1-208-806-11	s	METAL, CHIP 10k 0.5% 1/10W
R449	1-216-009-00	s	METAL, CHIP 22 5% 1/10W
R450	1-216-073-00	s	METAL, CHIP 10k 5% 1/10W
R451	1-216-049-91	s	METAL, CHIP 1k 5% 1/10W
R452	1-216-081-00	s	METAL, CHIP 22k 5% 1/10W
R453	1-216-081-00	s	METAL, CHIP 22k 5% 1/10W
R454	1-216-659-11	s	METAL, CHIP 2.2k 0.5% 1/10W
R455	1-208-789-11	s	METAL, CHIP 2k 0.5% 1/10W
R456	1-216-677-11	s	METAL, CHIP 12k 0.5% 1/10W
R457	1-216-645-11	s	METAL, CHIP 560 0.5% 1/10W
R458	1-216-121-91	s	METAL, CHIP 1M 5% 1/10W
R459	1-208-814-11	s	METAL, CHIP 22k 0.5% 1/10W
R460	1-208-803-11	s	METAL, CHIP 7.5k 0.5% 1/10W
R461	1-216-045-00	s	METAL, CHIP 680 5% 1/10W
R462	1-216-674-11	s	METAL, CHIP 9.1k 0.5% 1/10W
R463	1-208-812-11	s	METAL, CHIP 18k 0.5% 1/10W
R464	1-216-657-11	s	METAL, CHIP 1.8k 0.5% 1/10W
R465	1-216-069-00	s	METAL, CHIP 6.8k 5% 1/10W
R466	1-216-069-00	s	METAL, CHIP 6.8k 5% 1/10W
R467	1-208-799-11	s	METAL, CHIP 5.1k 0.5% 1/10W
R468	1-216-073-00	s	METAL, CHIP 10k 5% 1/10W
R469	1-216-095-00	s	METAL, CHIP 82k 5% 1/10W
R470	1-208-799-11	s	METAL, CHIP 5.1k 0.5% 1/10W
R471	1-216-663-11	s	METAL, CHIP 3.3k 0.5% 1/10W
R472	1-216-650-11	s	METAL, CHIP 910 0.5% 1/10W
R473	1-216-663-11	s	METAL, CHIP 3.3k 0.5% 1/10W
R474	1-216-073-00	s	METAL, CHIP 10k 5% 1/10W

Note: In this list * marked parts are design changed.
Refer to pages 18-29 to 18-31 for applicable serial numbers.

(AP-34 BOARD(for UVW-1200, NTSC))

Ref. No. or Q'ty	Part No.	SP	Description
R475	1-216-073-00	s	METAL, CHIP 10k 5% 1/10W
R476	1-216-073-00	s	METAL, CHIP 10k 5% 1/10W
R477	1-216-667-11	s	METAL, CHIP 4.7k 0.5% 1/10W
R478	1-216-033-00	s	METAL, CHIP 220 5% 1/10W
R479	1-216-025-91	s	METAL, CHIP 100 5% 1/10W
R480	1-216-067-00	s	METAL, CHIP 5.6k 5% 1/10W
R481	1-216-067-00	s	METAL, CHIP 5.6k 5% 1/10W
R482	1-208-810-11	s	METAL, CHIP 15k 0.5% 1/10W
R483	1-216-674-11	s	METAL, CHIP 9.1k 0.5% 1/10W
R484	1-216-073-00	s	METAL, CHIP 10k 5% 1/10W
R485	1-247-807-31	s	CARBON 100 5% 1/4W
R486 ⚠	1-216-399-00	s	WIREWOUND 6.8 10% 3W
R487 ⚠	1-216-399-00	s	WIREWOUND 6.8 10% 3W
R488	1-247-807-31	s	CARBON 100 5% 1/4W
R489	1-218-754-11	s	METAL, CHIP 120k 0.5% 1/10W
R490	1-216-025-91	s	METAL, CHIP 100 5% 1/10W
R491	1-216-121-91	s	METAL, CHIP 1M 5% 1/10W
R492	1-249-389-11	s	CARBON 4.7 5% 1/4W
R493	1-216-073-00	s	METAL, CHIP 10k 5% 1/10W
R494	1-216-073-00	s	METAL, CHIP 10k 5% 1/10W
R495	1-216-121-91	s	METAL, CHIP 1M 5% 1/10W
R602	1-247-855-11	s	CARBON 10k 5% 1/4W
RV1	1-238-551-11	s	RES, ADJ CARBON 220k
RV2	1-241-784-11	s	RES, ADJ METAL 4.7k
RV3	1-241-783-11	s	RES, ADJ METAL 2.2k
RV4	1-241-785-11	s	RES, ADJ METAL 10k
RV201	1-238-551-11	s	RES, ADJ CARBON 220k
RV202	1-241-784-11	s	RES, ADJ METAL 4.7k
RV203	1-241-783-11	s	RES, ADJ METAL 2.2k
RV204	1-241-785-11	s	RES, ADJ METAL 10k
S1	1-570-602-11	s	SWITCH, DIP 2-CKT
S2	1-570-602-11	s	SWITCH, DIP 2-CKT
S201	1-570-602-11	s	SWITCH, DIP 2-CKT
S202	1-570-602-11	s	SWITCH, DIP 2-CKT
T1	1-423-658-11	s	TRANSFORMER, RF INPUT
T2	1-423-658-11	s	TRANSFORMER, RF INPUT
T3	1-423-657-11	s	TRANSFORMER, RF INPUT
T4	1-423-657-11	s	TRANSFORMER, RF INPUT
TH1	1-807-972-11	s	THERMISTOR SV-1715 1.25k
TH2	1-807-972-11	s	THERMISTOR SV-1715 1.25k

AP-34P BOARD(for UVW-1200P, PAL)

AP-34P board is used for UVW-1200P

Ref. No. or Q'ty	Part No.	SP	Description
1pc	A-8275-611-A	o	MOUNTED CIRCUIT BOARD, AP-34P
1pc	7-682-903-21	s	SCREW, PWH 3x8
C1	1-163-033-91	s	CERAMIC, CHIP 0.022uF 50V
C2	1-163-033-91	s	CERAMIC, CHIP 0.022uF 50V
C3	1-163-033-91	s	CERAMIC, CHIP 0.022uF 50V
C4	1-163-033-91	s	CERAMIC, CHIP 0.022uF 50V
C5-12	1-126-933-11	s	ELECT 100uF 20% 16V
C13	1-163-227-11	s	CERAMIC, CHIP 10pF 5% 50V
C14	1-163-227-11	s	CERAMIC, CHIP 10pF 5% 50V
C15	1-163-227-11	s	CERAMIC, CHIP 10pF 5% 50V
C16	1-163-227-11	s	CERAMIC, CHIP 10pF 5% 50V
C17	1-164-004-11	s	CERAMIC, CHIP 0.1uF 10% 25V
C18	1-164-004-11	s	CERAMIC, CHIP 0.1uF 10% 25V
C19	1-164-004-11	s	CERAMIC, CHIP 0.1uF 10% 25V
C20	1-164-004-11	s	CERAMIC, CHIP 0.1uF 10% 25V
C101	1-163-033-91	s	CERAMIC, CHIP 0.022uF 50V
C102	1-163-033-91	s	CERAMIC, CHIP 0.022uF 50V
C103	1-126-933-11	s	ELECT 100uF 20% 16V
C104	1-126-933-11	s	ELECT 100uF 20% 16V
C106	1-126-933-11	s	ELECT 100uF 20% 16V
C107	1-126-933-11	s	ELECT 100uF 20% 16V
C108	1-126-933-11	s	ELECT 100uF 20% 16V
C109	1-163-033-91	s	CERAMIC, CHIP 0.022uF 50V
C110	1-163-033-91	s	CERAMIC, CHIP 0.022uF 50V
C111	1-163-033-91	s	CERAMIC, CHIP 0.022uF 50V
C112	1-163-033-91	s	CERAMIC, CHIP 0.022uF 50V
C113	1-126-933-11	s	ELECT 100uF 20% 16V
C114	1-126-933-11	s	ELECT 100uF 20% 16V
C115	1-163-989-11	s	CERAMIC, CHIP 0.033uF 10% 25V
C116	1-163-989-11	s	CERAMIC, CHIP 0.033uF 10% 25V
C117	1-164-004-11	s	CERAMIC, CHIP 0.1uF 10% 25V
C118	1-126-933-11	s	ELECT 100uF 20% 16V
C119	1-126-964-11	s	ELECT 10uF 20% 50V
C120	1-163-033-91	s	CERAMIC, CHIP 0.022uF 50V
C121	1-163-033-91	s	CERAMIC, CHIP 0.022uF 50V
C122	1-126-933-11	s	ELECT 100uF 20% 16V
C123	1-163-033-91	s	CERAMIC, CHIP 0.022uF 50V
C124	1-163-033-91	s	CERAMIC, CHIP 0.022uF 50V
C125	1-126-933-11	s	ELECT 100uF 20% 16V
C126	1-126-933-11	s	ELECT 100uF 20% 16V
C127	1-126-964-11	s	ELECT 10uF 20% 50V
C128	1-163-239-11	s	CERAMIC, CHIP 33pF 5% 50V
C129	1-163-033-91	s	CERAMIC, CHIP 0.022uF 50V
C130	1-126-933-11	s	ELECT 100uF 20% 16V
C131	1-126-964-11	s	ELECT 10uF 20% 50V
C132	1-163-989-11	s	CERAMIC, CHIP 0.033uF 10% 25V
C133	1-163-133-00	s	CERAMIC, CHIP 470pF 5% 50V
C135	1-163-125-00	s	CERAMIC, CHIP 220pF 5% 50V
C201	1-163-133-00	s	CERAMIC, CHIP 470pF 5% 50V
C202	1-163-243-11	s	CERAMIC, CHIP 47pF 5% 50V
C203	1-163-235-11	s	CERAMIC, CHIP 22pF 5% 50V
C204	1-163-127-00	s	CERAMIC, CHIP 270pF 5% 50V
C205	1-130-485-00	s	MYLAR 0.015uF 5% 50V
C206	1-126-933-11	s	ELECT 100uF 20% 16V
C207	1-163-125-00	s	CERAMIC, CHIP 220pF 5% 50V
C208	1-126-964-11	s	ELECT 10uF 20% 50V
C209	1-130-481-00	s	MYLAR 0.0068uF 5% 50V

Note: In this list * marked parts are design changed.
Refer to pages 18-29 to 18-31 for applicable serial numbers.

(AP-34P BOARD(for UVW-1200P, PAL))

Ref. No. or Q'ty	Part No.	SP	Description
C210	1-164-182-11	s	CERAMIC, CHIP 3300pF 10% 100V
C211	1-126-964-11	s	ELECT 10uF 20% 50V
C212	1-128-551-11	s	ELECT 22uF 20% 50V
C213	1-128-551-11	s	ELECT 22uF 20% 50V
C214	1-130-498-00	s	MYLAR 0.18uF 5% 50V
C215	1-126-964-11	s	ELECT 10uF 20% 50V
C216-221	1-130-487-00	s	MYLAR 0.022uF 5% 50V
C222	1-126-964-11	s	ELECT 10uF 20% 50V
C223	1-126-964-11	s	ELECT 10uF 20% 50V
C224	1-163-243-11	s	CERAMIC, CHIP 47pF 5% 50V
C225	1-130-483-00	s	MYLAR 0.01uF 5% 50V
C226	1-163-275-11	s	CERAMIC, CHIP 0.001uF 5% 50V
C227	1-163-275-11	s	CERAMIC, CHIP 0.001uF 5% 50V
C228	1-163-275-11	s	CERAMIC, CHIP 0.001uF 5% 50V
C229	1-163-275-11	s	CERAMIC, CHIP 0.001uF 5% 50V
C230	1-130-483-00	s	MYLAR 0.01uF 5% 50V
C231	1-163-139-00	s	CERAMIC, CHIP 820pF 5% 50V
C232	1-163-243-11	s	CERAMIC, CHIP 47pF 5% 50V
C233	1-130-483-00	s	MYLAR 0.01uF 5% 50V
C234	1-164-232-11	s	CERAMIC, CHIP 0.01uF 10% 100V
C235	1-164-232-11	s	CERAMIC, CHIP 0.01uF 10% 100V
C236	1-124-925-11	s	ELECT 2.2uF 20% 100V
C237	1-164-004-11	s	CERAMIC, CHIP 0.1uF 10% 25V
C238	1-107-498-11	s	FILM, CHIP 0.0022uF 2% 50V
C239	1-107-498-11	s	FILM, CHIP 0.0022uF 2% 50V
C240	1-107-499-11	s	FILM, CHIP 0.0039uF 2% 16V
C241	1-131-345-00	s	TANTALUM 0.47uF 10% 35V
C242	1-130-497-00	s	MYLAR 0.15uF 5% 50V
C243	1-124-925-11	s	ELECT 2.2uF 20% 100V
C244	1-104-553-11	s	FILM, CHIP 0.015uF 5% 16V
C245	1-130-499-00	s	MYLAR 0.22uF 5% 50V
C246	1-164-344-11	s	CERAMIC, CHIP 0.068uF 10% 25V
C247	1-104-560-11	s	FILM, CHIP 0.056uF 5% 16V
C248	1-124-925-11	s	ELECT 2.2uF 20% 100V
C249	1-107-553-11	s	FILM, CHIP 0.0056uF 2% 16V
C250	1-104-551-11	s	FILM, CHIP 0.01uF 5% 16V
C251	1-163-251-11	s	CERAMIC, CHIP 100pF 5% 50V
C252	1-163-251-11	s	CERAMIC, CHIP 100pF 5% 50V
C253	1-126-947-11	s	ELECT 47uF 20% 35V
C254	1-126-947-11	s	ELECT 47uF 20% 35V
C255	1-163-263-11	s	CERAMIC, CHIP 330pF 5% 50V
C256	1-163-235-11	s	CERAMIC, CHIP 22pF 5% 50V
C257	1-126-964-11	s	ELECT 10uF 20% 50V
C258	1-126-964-11	s	ELECT 10uF 20% 50V
C259	1-126-926-11	s	ELECT 1000uF 20% 10V
C260	1-126-926-11	s	ELECT 1000uF 20% 10V
C261	1-126-926-11	s	ELECT 1000uF 20% 10V
C262	1-126-926-11	s	ELECT 1000uF 20% 10V
C263	1-163-235-11	s	CERAMIC, CHIP 22pF 5% 50V
C264	1-126-926-11	s	ELECT 1000uF 20% 10V
C265	1-164-004-11	s	CERAMIC, CHIP 0.1uF 10% 25V
C266	1-163-809-11	s	CERAMIC, CHIP 0.047uF 10% 25V
C267	1-126-926-11	s	ELECT 1000uF 20% 10V
C269	1-126-964-11	s	ELECT 10uF 20% 50V
C401	1-163-133-00	s	CERAMIC, CHIP 470pF 5% 50V
C402	1-163-243-11	s	CERAMIC, CHIP 47pF 5% 50V
C403	1-163-235-11	s	CERAMIC, CHIP 22pF 5% 50V
C404	1-163-127-00	s	CERAMIC, CHIP 270pF 5% 50V
C405	1-130-485-00	s	MYLAR 0.015uF 5% 50V

(AP-34P BOARD(for UVW-1200P, PAL))

Ref. No. or Q'ty	Part No.	SP	Description
C406	1-126-933-11	s	ELECT 100uF 20% 16V
C407	1-163-125-00	s	CERAMIC, CHIP 220pF 5% 50V
C408	1-126-964-11	s	ELECT 10uF 20% 50V
C409	1-130-481-00	s	MYLAR 0.0068uF 5% 50V
C410	1-164-182-11	s	CERAMIC, CHIP 3300pF 10% 100V
C411	1-126-964-11	s	ELECT 10uF 20% 50V
C412	1-128-551-11	s	ELECT 22uF 20% 50V
C413	1-128-551-11	s	ELECT 22uF 20% 50V
C414	1-130-498-00	s	MYLAR 0.18uF 5% 50V
C415	1-126-964-11	s	ELECT 10uF 20% 50V
C416-421	1-130-487-00	s	MYLAR 0.022uF 5% 50V
C422	1-126-964-11	s	ELECT 10uF 20% 50V
C423	1-126-964-11	s	ELECT 10uF 20% 50V
C424	1-163-243-11	s	CERAMIC, CHIP 47pF 5% 50V
C425	1-130-483-00	s	MYLAR 0.01uF 5% 50V
C426	1-163-275-11	s	CERAMIC, CHIP 0.001uF 5% 50V
C427	1-163-275-11	s	CERAMIC, CHIP 0.001uF 5% 50V
C428	1-163-275-11	s	CERAMIC, CHIP 0.001uF 5% 50V
C429	1-163-275-11	s	CERAMIC, CHIP 0.001uF 5% 50V
C430	1-130-483-00	s	MYLAR 0.01uF 5% 50V
C431	1-163-139-00	s	CERAMIC, CHIP 820pF 5% 50V
C432	1-163-243-11	s	CERAMIC, CHIP 47pF 5% 50V
C433	1-130-483-00	s	MYLAR 0.01uF 5% 50V
C434	1-124-925-11	s	ELECT 2.2uF 20% 100V
C435	1-107-498-11	s	FILM, CHIP 0.0022uF 2% 50V
C436	1-107-498-11	s	FILM, CHIP 0.0022uF 2% 50V
C437	1-107-499-11	s	FILM, CHIP 0.0039uF 2% 16V
C438	1-131-345-00	s	TANTALUM 0.47uF 10% 35V
C439	1-130-497-00	s	MYLAR 0.15uF 5% 50V
C440	1-124-925-11	s	ELECT 2.2uF 20% 100V
C441	1-104-553-11	s	FILM, CHIP 0.015uF 5% 16V
C442	1-130-499-00	s	MYLAR 0.22uF 5% 50V
C443	1-164-344-11	s	CERAMIC, CHIP 0.068uF 10% 25V
C444	1-104-560-11	s	FILM, CHIP 0.056uF 5% 16V
C445	1-124-925-11	s	ELECT 2.2uF 20% 100V
C446	1-107-553-11	s	FILM, CHIP 0.0056uF 2% 16V
C447	1-104-551-11	s	FILM, CHIP 0.01uF 5% 16V
C448	1-163-251-11	s	CERAMIC, CHIP 100pF 5% 50V
C449	1-126-947-11	s	ELECT 47uF 20% 35V
C450	1-126-947-11	s	ELECT 47uF 20% 35V
C451	1-163-263-11	s	CERAMIC, CHIP 330pF 5% 50V
C452	1-163-235-11	s	CERAMIC, CHIP 22pF 5% 50V
C453	1-126-964-11	s	ELECT 10uF 20% 50V
C454	1-126-964-11	s	ELECT 10uF 20% 50V
C455	1-126-926-11	s	ELECT 1000uF 20% 10V
C456	1-126-926-11	s	ELECT 1000uF 20% 10V
C457	1-163-235-11	s	CERAMIC, CHIP 22pF 5% 50V
C458	1-126-926-11	s	ELECT 1000uF 20% 10V
C459	1-126-926-11	s	ELECT 1000uF 20% 10V
C460	1-163-809-11	s	CERAMIC, CHIP 0.047uF 10% 25V
C461	1-126-926-11	s	ELECT 1000uF 20% 10V
C462	1-164-004-11	s	CERAMIC, CHIP 0.1uF 10% 25V
C463	1-126-926-11	s	ELECT 1000uF 20% 10V
CN1	1-506-471-11	s	CONNECTOR 6P, MALE
CN2	1-506-480-11	s	CONNECTOR 15P, MALE
CN3	1-506-472-11	s	CONNECTOR 7P, MALE
CN4	1-564-009-11	o	CONNECTOR 10P, MALE
CN5	1-506-471-11	s	CONNECTOR 6P, MALE

Note: In this list * marked parts are design changed.
Refer to pages 18-29 to 18-31 for applicable serial numbers.

(AP-34P BOARD(for UVW-1200P, PAL))

Ref. No. or Q'ty	Part No.	SP	Description
CN6	1-506-471-11	s	CONNECTOR 6P, MALE
CN7	1-564-011-11	o	CONNECTOR 12P, MALE
CN8	1-564-002-11	s	CONNECTOR 3P, MALE
D101	8-719-941-23	s	DIODE DA204U
D103	8-719-941-23	s	DIODE DA204U
D104	8-719-110-39	s	DIODE RD15ESB1
D201	8-719-123-85	s	DIODE 1SS304
D202	8-719-941-23	s	DIODE DA204U
D203	8-719-123-85	s	DIODE 1SS304
D204	8-719-123-85	s	DIODE 1SS304
D401	8-719-941-23	s	DIODE DA204U
D402	8-719-123-85	s	DIODE 1SS304
D403	8-719-123-85	s	DIODE 1SS304
IC1	1-810-335-11	s	HIC BP-024
IC2	1-810-335-11	s	HIC BP-024
IC3	1-810-335-11	s	HIC BP-024
IC4	1-810-335-11	s	HIC BP-024
IC101	8-759-172-41	s	IC L78M09T-TL
IC102	8-759-173-37	s	IC L79M09T-TL
IC103	8-759-701-25	s	IC NJM2068D-D
IC104	8-759-635-83	s	IC M51957BFP
IC105	8-759-172-41	s	IC L78M09T-TL
IC106	8-759-172-41	s	IC L78M09T-TL
IC107	8-759-173-37	s	IC L79M09T-TL
IC108	8-759-172-41	s	IC L78M09T-TL
IC109	8-759-701-25	s	IC NJM2068D-D
IC110	8-759-729-03	s	IC NJM2903D
IC201	8-759-701-25	s	IC NJM2068D-D
IC202	8-759-701-25	s	IC NJM2068D-D
IC203	8-759-701-25	s	IC NJM2068D-D
IC204	8-759-705-58	s	IC NJM4558D-D
IC205	8-759-705-58	s	IC NJM4558D-D
IC206	8-759-705-58	s	IC NJM4558D-D
IC209	8-759-705-58	s	IC NJM4558D-D
IC210	8-759-145-57	s	IC UPC4557C
IC211	8-759-145-57	s	IC UPC4557C
IC212	8-759-917-18	s	IC SN74HCU04AN
IC401	8-759-701-25	s	IC NJM2068D-D
IC402	8-759-701-25	s	IC NJM2068D-D
IC403	8-759-701-25	s	IC NJM2068D-D
IC404	8-759-705-58	s	IC NJM4558D-D
IC405	8-759-705-58	s	IC NJM4558D-D
IC406	8-759-705-58	s	IC NJM4558D-D
IC407	8-752-018-80	s	IC CX20188
IC408	8-759-705-58	s	IC NJM4558D-D
IC409	8-759-705-58	s	IC NJM4558D-D
IC410	8-759-145-57	s	IC UPC4557C
L101	1-410-470-11	s	INDUCTOR 10uH
L102	1-410-470-11	s	INDUCTOR 10uH
L103	1-412-533-21	s	INDUCTOR 47uH
L201	1-410-068-11	s	INDUCTOR 5.60mH
L202	1-408-617-31	s	INDUCTOR 150uH
L401	1-410-068-11	s	INDUCTOR 5.60mH
L402	1-408-617-31	s	INDUCTOR 150uH
PS101 ⚠	1-532-727-11	s	LINK, IC 0.25A
PS102 ⚠	1-532-727-11	s	LINK, IC 0.25A
PS103 ⚠	1-532-679-00	s	LINK, IC 0.6A

(AP-34P BOARD(for UVW-1200P, PAL))

Ref. No. or Q'ty	Part No.	SP	Description
Q101	8-729-209-06	s	TRANSISTOR 2SC4213-A
Q201	8-729-209-06	s	TRANSISTOR 2SC4213-A
Q202	8-729-209-06	s	TRANSISTOR 2SC4213-A
Q203	8-729-209-06	s	TRANSISTOR 2SC4213-A
Q204	8-729-905-12	s	TRANSISTOR DTA144EU
Q205	8-729-140-93	s	TRANSISTOR 2SB733-34
Q206	8-729-423-93	s	TRANSISTOR 2SD2136-R(TA)
Q207	8-729-022-00	s	TRANSISTOR 2SB1416-R(TA)
Q208	8-729-021-98	s	TRANSISTOR 2SJ226-AZ
Q209	8-729-140-93	s	TRANSISTOR 2SB733-34
Q210	8-729-021-98	s	TRANSISTOR 2SJ226-AZ
Q212	8-729-905-18	s	TRANSISTOR DTC144EU
Q401	8-729-209-06	s	TRANSISTOR 2SC4213-A
Q402	8-729-209-06	s	TRANSISTOR 2SC4213-A
Q403	8-729-209-06	s	TRANSISTOR 2SC4213-A
Q404	8-729-423-93	s	TRANSISTOR 2SD2136-R(TA)
Q405	8-729-022-00	s	TRANSISTOR 2SB1416-R(TA)
Q406	8-729-021-98	s	TRANSISTOR 2SJ226-AZ
Q407	8-729-140-93	s	TRANSISTOR 2SB733-34
Q408	8-729-021-98	s	TRANSISTOR 2SJ226-AZ
R1	1-208-822-11	s	METAL, CHIP 47k 0.5% 1/10W
R2	1-208-822-11	s	METAL, CHIP 47k 0.5% 1/10W
R3	1-208-822-11	s	METAL, CHIP 47k 0.5% 1/10W
R4	1-208-822-11	s	METAL, CHIP 47k 0.5% 1/10W
R5	1-216-001-00	s	METAL, CHIP 10 5% 1/10W
R6	1-216-001-00	s	METAL, CHIP 10 5% 1/10W
R7	1-216-001-00	s	METAL, CHIP 10 5% 1/10W
R8	1-216-001-00	s	METAL, CHIP 10 5% 1/10W
R9	1-216-689-11	s	METAL, CHIP 39k 0.5% 1/10W
R10	1-216-689-11	s	METAL, CHIP 39k 0.5% 1/10W
R11	1-208-822-11	s	METAL, CHIP 47k 0.5% 1/10W
R12	1-208-822-11	s	METAL, CHIP 47k 0.5% 1/10W
R13	1-216-625-11	s	METAL, CHIP 82 0.5% 1/10W
R14	1-216-625-11	s	METAL, CHIP 82 0.5% 1/10W
R15	1-216-625-11	s	METAL, CHIP 82 0.5% 1/10W
R16	1-216-625-11	s	METAL, CHIP 82 0.5% 1/10W
R101	1-216-603-11	s	METAL, CHIP 10 0.5% 1/10W
R102	1-216-073-00	s	METAL, CHIP 10k 5% 1/10W
R103	1-216-073-00	s	METAL, CHIP 10k 5% 1/10W
R104	1-216-033-00	s	METAL, CHIP 220 5% 1/10W
R105	1-216-121-91	s	METAL, CHIP 1M 5% 1/10W
R106	1-216-089-91	s	METAL, CHIP 47k 5% 1/10W
R107	1-216-073-00	s	METAL, CHIP 10k 5% 1/10W
R108	1-216-089-91	s	METAL, CHIP 47k 5% 1/10W
R109	1-216-089-91	s	METAL, CHIP 47k 5% 1/10W
R110	1-216-659-11	s	METAL, CHIP 2.2k 0.5% 1/10W
R111	1-216-065-00	s	METAL, CHIP 4.7k 5% 1/10W
R112	1-216-121-91	s	METAL, CHIP 1M 5% 1/10W
R113	1-216-049-91	s	METAL, CHIP 1k 5% 1/10W
R114	1-216-067-00	s	METAL, CHIP 5.6k 5% 1/10W
R115	1-216-049-91	s	METAL, CHIP 1k 5% 1/10W
R116	1-216-073-00	s	METAL, CHIP 10k 5% 1/10W
R117	1-216-113-00	s	METAL, CHIP 470k 5% 1/10W
R118	1-216-025-91	s	METAL, CHIP 100 5% 1/10W
R119	1-216-067-00	s	METAL, CHIP 5.6k 5% 1/10W
R120	1-216-025-91	s	METAL, CHIP 100 5% 1/10W
R121	1-216-065-00	s	METAL, CHIP 4.7k 5% 1/10W
R122	1-216-073-00	s	METAL, CHIP 10k 5% 1/10W
R123	1-249-417-11	s	CARBON 1k 5% 1/4W

Note: In this list * marked parts are design changed.
Refer to pages 18-29 to 18-31 for applicable serial numbers.

(AP-34P BOARD(for UVW-1200P, PAL))

Ref. No. or Q'ty	Part No.	SP	Description	
R201	1-216-001-00	s	METAL, CHIP 10 5% 1/10W	
R202	1-216-097-91	s	METAL, CHIP 100k 5% 1/10W	
R203	1-216-105-91	s	METAL, CHIP 220k 5% 1/10W	
R204	1-216-626-11	s	METAL, CHIP 91 0.5% 1/10W	
*R205	1-216-651-11	s	METAL, CHIP 1k 0.5% 1/10W	*16
	1-208-774-11	s	METAL, CHIP 470 5% 1/10W	*17
R206	1-216-659-11	s	METAL, CHIP 2.2k 0.5% 1/10W	
R207	1-208-806-11	s	METAL, CHIP 10k 0.5% 1/10W	
R208	1-216-009-00	s	METAL, CHIP 22 5% 1/10W	
R209	1-216-073-00	s	METAL, CHIP 10k 5% 1/10W	
R210	1-216-073-00	s	METAL, CHIP 10k 5% 1/10W	
R211	1-216-073-00	s	METAL, CHIP 10k 5% 1/10W	
R212	1-216-073-00	s	METAL, CHIP 10k 5% 1/10W	
R213	1-216-049-91	s	METAL, CHIP 1k 5% 1/10W	
R214	1-216-073-00	s	METAL, CHIP 10k 5% 1/10W	
R215	1-216-073-00	s	METAL, CHIP 10k 5% 1/10W	
R216	1-216-633-11	s	METAL, CHIP 180 0.5% 1/10W	
R217	1-208-806-11	s	METAL, CHIP 10k 0.5% 1/10W	
R218	1-216-041-00	s	METAL, CHIP 470 5% 1/10W	
R219	1-216-642-11	s	METAL, CHIP 430 0.5% 1/10W	
R220	1-216-073-00	s	METAL, CHIP 10k 5% 1/10W	
R221	1-208-822-11	s	METAL, CHIP 47k 0.5% 1/10W	
R222	1-208-806-11	s	METAL, CHIP 10k 0.5% 1/10W	
R223	1-208-814-11	s	METAL, CHIP 22k 0.5% 1/10W	
R224	1-215-479-00	s	METAL 270k 1% 1/6W	
R225	1-215-471-00	s	METAL 120k 1% 1/6W	
R226	1-215-484-00	s	METAL 430k 1% 1/6W	
R227	1-208-812-11	s	METAL, CHIP 18k 0.5% 1/10W	
R228	1-216-677-11	s	METAL, CHIP 12k 0.5% 1/10W	
R229	1-216-695-11	s	METAL, CHIP 68k 0.5% 1/10W	
R231	1-215-479-00	s	METAL 270k 1% 1/6W	
R232	1-215-463-00	s	METAL 56k 1% 1/6W	
R233	1-208-812-11	s	METAL, CHIP 18k 0.5% 1/10W	
R234	1-208-814-11	s	METAL, CHIP 22k 0.5% 1/10W	
R235	1-208-774-11	s	METAL, CHIP 470 5% 1/10W	
R236	1-216-622-11	s	METAL, CHIP 62 0.5% 1/10W	
R237	1-216-678-11	s	METAL, CHIP 13k 0.5% 1/10W	
R238	1-216-673-11	s	METAL, CHIP 8.2k 0.5% 1/10W	
R239	1-216-652-11	s	METAL, CHIP 1.1k 0.5% 1/10W	
R240	1-216-622-11	s	METAL, CHIP 62 0.5% 1/10W	
R241	1-208-784-11	s	METAL, CHIP 1.2k 0.5% 1/10W	
R242	1-216-676-11	s	METAL, CHIP 11k 0.5% 1/10W	
R243	1-216-677-11	s	METAL, CHIP 12k 0.5% 1/10W	
R244	1-208-785-11	s	METAL, CHIP 1.3k 0.5% 1/10W	
R245	1-215-493-00	s	METAL 1M 1% 1/6W	
R246	1-216-666-11	s	METAL, CHIP 4.3k 0.5% 1/10W	
R247	1-208-822-11	s	METAL, CHIP 47k 0.5% 1/10W	
R248	1-208-806-11	s	METAL, CHIP 10k 0.5% 1/10W	
R249	1-216-009-00	s	METAL, CHIP 22 5% 1/10W	
R250	1-216-073-00	s	METAL, CHIP 10k 5% 1/10W	
R251	1-216-081-00	s	METAL, CHIP 22k 5% 1/10W	
R252	1-216-049-91	s	METAL, CHIP 1k 5% 1/10W	
R253	1-216-081-00	s	METAL, CHIP 22k 5% 1/10W	
R254	1-216-081-00	s	METAL, CHIP 22k 5% 1/10W	
R255	1-216-699-11	s	METAL, CHIP 100k 0.5% 1/10W	
R256	1-208-817-11	s	METAL, CHIP 30k 0.5% 1/10W	
R257	1-216-081-00	s	METAL, CHIP 22k 5% 1/10W	
R258	1-216-049-91	s	METAL, CHIP 1k 5% 1/10W	

(AP-34P BOARD(for UVW-1200P, PAL))

Ref. No. or Q'ty	Part No.	SP	Description	
R259	1-216-659-11	s	METAL, CHIP 2.2k 0.5% 1/10W	
R260	1-208-789-11	s	METAL, CHIP 2k 0.5% 1/10W	
R261	1-216-677-11	s	METAL, CHIP 12k 0.5% 1/10W	
R262	1-216-645-11	s	METAL, CHIP 560 0.5% 1/10W	
R263	1-216-121-91	s	METAL, CHIP 1M 5% 1/10W	
R264	1-208-814-11	s	METAL, CHIP 22k 0.5% 1/10W	
R265	1-208-803-11	s	METAL, CHIP 7.5k 0.5% 1/10W	
R266	1-216-045-00	s	METAL, CHIP 680 5% 1/10W	
R267	1-216-674-11	s	METAL, CHIP 9.1k 0.5% 1/10W	
R268	1-208-812-11	s	METAL, CHIP 18k 0.5% 1/10W	
R269	1-216-657-11	s	METAL, CHIP 1.8k 0.5% 1/10W	
R270	1-216-069-00	s	METAL, CHIP 6.8k 5% 1/10W	
R271	1-216-063-91	s	METAL, CHIP 3.9k 5% 1/10W	
R272	1-208-799-11	s	METAL, CHIP 5.1k 0.5% 1/10W	
R273	1-216-073-00	s	METAL, CHIP 10k 5% 1/10W	
R274	1-216-069-00	s	METAL, CHIP 6.8k 5% 1/10W	
R275	1-216-073-00	s	METAL, CHIP 10k 5% 1/10W	
R276	1-216-095-00	s	METAL, CHIP 82k 5% 1/10W	
R277	1-216-646-11	s	METAL, CHIP 620 0.5% 1/10W	
R278	1-208-799-11	s	METAL, CHIP 5.1k 0.5% 1/10W	
R279	1-216-663-11	s	METAL, CHIP 3.3k 0.5% 1/10W	
R280	1-216-073-00	s	METAL, CHIP 10k 5% 1/10W	
R281	1-216-073-00	s	METAL, CHIP 10k 5% 1/10W	
R282	1-216-650-11	s	METAL, CHIP 910 0.5% 1/10W	
R283	1-216-663-11	s	METAL, CHIP 3.3k 0.5% 1/10W	
R284	1-216-073-00	s	METAL, CHIP 10k 5% 1/10W	
R285	1-216-073-00	s	METAL, CHIP 10k 5% 1/10W	
R286	1-216-667-11	s	METAL, CHIP 4.7k 0.5% 1/10W	
R287	1-216-073-00	s	METAL, CHIP 10k 5% 1/10W	
R288	1-216-033-00	s	METAL, CHIP 220 5% 1/10W	
R289	1-216-067-00	s	METAL, CHIP 5.6k 5% 1/10W	
R290	1-216-067-00	s	METAL, CHIP 5.6k 5% 1/10W	
R291	1-216-025-91	s	METAL, CHIP 100 5% 1/10W	
R292	1-208-810-11	s	METAL, CHIP 15k 0.5% 1/10W	
R293	1-216-674-11	s	METAL, CHIP 9.1k 0.5% 1/10W	
R294	1-247-807-31	s	CARBON 100 5% 1/4W	
R295	⚠ 1-216-399-00	s	WIREWOUND 6.8 10% 3W	
R296	⚠ 1-216-399-00	s	WIREWOUND 6.8 10% 3W	
R297	1-247-807-31	s	CARBON 100 5% 1/4W	
R298	1-216-073-00	s	METAL, CHIP 10k 5% 1/10W	
R299	1-218-754-11	s	METAL, CHIP 120k 0.50% 1/10W	
R300	1-216-025-91	s	METAL, CHIP 100 5% 1/10W	
R301	1-216-121-91	s	METAL, CHIP 1M 5% 1/10W	
R302	1-249-389-11	s	CARBON 4.7 5% 1/4W	
R303	1-216-121-91	s	METAL, CHIP 1M 5% 1/10W	
R304	1-216-073-00	s	METAL, CHIP 10k 5% 1/10W	
R305	1-216-073-00	s	METAL, CHIP 10k 5% 1/10W	
R306-310	1-216-097-91	s	METAL, CHIP 100k 5% 1/10W	
R401	1-216-001-00	s	METAL, CHIP 10 5% 1/10W	
R402	1-216-097-91	s	METAL, CHIP 100k 5% 1/10W	
R403	1-216-105-91	s	METAL, CHIP 220k 5% 1/10W	
R404	1-216-626-11	s	METAL, CHIP 91 0.5% 1/10W	
*R405	1-216-651-11	s	METAL, CHIP 1k 0.5% 1/10W	*16
	1-208-774-11	s	METAL, CHIP 470 5% 1/10W	*17
R406	1-216-659-11	s	METAL, CHIP 2.2k 0.5% 1/10W	
R407	1-208-806-11	s	METAL, CHIP 10k 0.5% 1/10W	
R408	1-216-009-00	s	METAL, CHIP 22 5% 1/10W	
R409	1-216-073-00	s	METAL, CHIP 10k 5% 1/10W	
R410	1-216-073-00	s	METAL, CHIP 10k 5% 1/10W	

Note: In this list * marked parts are design changed.
Refer to pages 18-29 to 18-31 for applicable serial numbers.

(AP-34P BOARD(for UVW-1200P, PAL))

Ref. No. or Q'ty	Part No.	SP	Description
R411	1-216-073-00	s	METAL, CHIP 10k 5% 1/10W
R412	1-216-073-00	s	METAL, CHIP 10k 5% 1/10W
R413	1-216-049-91	s	METAL, CHIP 1k 5% 1/10W
R414	1-216-073-00	s	METAL, CHIP 10k 5% 1/10W
R415	1-216-073-00	s	METAL, CHIP 10k 5% 1/10W
R416	1-216-633-11	s	METAL, CHIP 180 0.5% 1/10W
R417	1-208-806-11	s	METAL, CHIP 10k 0.5% 1/10W
R418	1-216-041-00	s	METAL, CHIP 470 5% 1/10W
R419	1-216-642-11	s	METAL, CHIP 430 0.5% 1/10W
R420	1-216-073-00	s	METAL, CHIP 10k 5% 1/10W
R421	1-208-822-11	s	METAL, CHIP 47k 0.5% 1/10W
R422	1-208-806-11	s	METAL, CHIP 10k 0.5% 1/10W
R423	1-208-814-11	s	METAL, CHIP 22k 0.5% 1/10W
R424	1-215-484-00	s	METAL 430k 1% 1/6W
R425	1-215-484-00	s	METAL 430k 1% 1/6W
R426	1-215-484-00	s	METAL 430k 1% 1/6W
R427	1-216-689-11	s	METAL, CHIP 39k 0.5% 1/10W
R428	1-208-812-11	s	METAL, CHIP 18k 0.5% 1/10W
R429	1-216-695-11	s	METAL, CHIP 68k 0.5% 1/10W
R431	1-215-487-00	s	METAL 560k 1% 1/6W
R432	1-215-466-00	s	METAL 75k 1% 1/6W
R433	1-208-812-11	s	METAL, CHIP 18k 0.5% 1/10W
R434	1-208-814-11	s	METAL, CHIP 22k 0.5% 1/10W
R435	1-208-774-11	s	METAL, CHIP 470 5% 1/10W
R436	1-216-622-11	s	METAL, CHIP 62 0.5% 1/10W
R437	1-216-678-11	s	METAL, CHIP 13k 0.5% 1/10W
R438	1-216-673-11	s	METAL, CHIP 8.2k 0.5% 1/10W
R439	1-216-652-11	s	METAL, CHIP 1.1k 0.5% 1/10W
R440	1-216-622-11	s	METAL, CHIP 62 0.5% 1/10W
R441	1-208-784-11	s	METAL, CHIP 1.2k 0.5% 1/10W
R442	1-216-676-11	s	METAL, CHIP 11k 0.5% 1/10W
R443	1-216-677-11	s	METAL, CHIP 12k 0.5% 1/10W
R444	1-208-785-11	s	METAL, CHIP 1.3k 0.5% 1/10W
R445	1-215-493-00	s	METAL 1M 1% 1/6W
R446	1-216-666-11	s	METAL, CHIP 4.3k 0.5% 1/10W
R447	1-208-822-11	s	METAL, CHIP 47k 0.5% 1/10W
R448	1-208-806-11	s	METAL, CHIP 10k 0.5% 1/10W
R449	1-216-009-00	s	METAL, CHIP 22 5% 1/10W
R450	1-216-073-00	s	METAL, CHIP 10k 5% 1/10W
R451	1-216-049-91	s	METAL, CHIP 1k 5% 1/10W
R452	1-216-081-00	s	METAL, CHIP 22k 5% 1/10W
R453	1-216-081-00	s	METAL, CHIP 22k 5% 1/10W
R454	1-216-659-11	s	METAL, CHIP 2.2k 0.5% 1/10W
R455	1-208-789-11	s	METAL, CHIP 2k 0.5% 1/10W
R456	1-216-677-11	s	METAL, CHIP 12k 0.5% 1/10W
R457	1-216-645-11	s	METAL, CHIP 560 0.5% 1/10W
R458	1-216-121-91	s	METAL, CHIP 1M 5% 1/10W
R459	1-208-814-11	s	METAL, CHIP 22k 0.5% 1/10W
R460	1-208-803-11	s	METAL, CHIP 7.5k 0.5% 1/10W
R461	1-216-045-00	s	METAL, CHIP 680 5% 1/10W
R462	1-216-674-11	s	METAL, CHIP 9.1k 0.5% 1/10W
R463	1-208-812-11	s	METAL, CHIP 18k 0.5% 1/10W
R464	1-216-657-11	s	METAL, CHIP 1.8k 0.5% 1/10W
R465	1-216-069-00	s	METAL, CHIP 6.8k 5% 1/10W
R466	1-216-069-00	s	METAL, CHIP 6.8k 5% 1/10W
R467	1-208-799-11	s	METAL, CHIP 5.1k 0.5% 1/10W
R468	1-216-073-00	s	METAL, CHIP 10k 5% 1/10W
R469	1-216-095-00	s	METAL, CHIP 82k 5% 1/10W
R470	1-208-799-11	s	METAL, CHIP 5.1k 0.5% 1/10W

(AP-34P BOARD(for UVW-1200P, PAL))

Ref. No. or Q'ty	Part No.	SP	Description	
R471	1-216-663-11	s	METAL, CHIP 3.3k 0.5% 1/10W	
R472	1-216-650-11	s	METAL, CHIP 910 0.5% 1/10W	
R473	1-216-663-11	s	METAL, CHIP 3.3k 0.5% 1/10W	
R474	1-216-073-00	s	METAL, CHIP 10k 5% 1/10W	
R475	1-216-073-00	s	METAL, CHIP 10k 5% 1/10W	
R476	1-216-073-00	s	METAL, CHIP 10k 5% 1/10W	
R477	1-216-667-11	s	METAL, CHIP 4.7k 0.5% 1/10W	
R478	1-216-033-00	s	METAL, CHIP 220 5% 1/10W	
R479	1-216-025-91	s	METAL, CHIP 100 5% 1/10W	
R480	1-216-067-00	s	METAL, CHIP 5.6k 5% 1/10W	
R481	1-216-067-00	s	METAL, CHIP 5.6k 5% 1/10W	
R482	1-208-810-11	s	METAL, CHIP 15k 0.5% 1/10W	
R483	1-216-674-11	s	METAL, CHIP 9.1k 0.5% 1/10W	
R484	1-216-073-00	s	METAL, CHIP 10k 5% 1/10W	
R485	1-247-807-31	s	CARBON 100 5% 1/4W	
R486	⚠ 1-216-399-00	s	WIREWOUND 6.8 10% 3W	
R487	⚠ 1-216-399-00	s	WIREWOUND 6.8 10% 3W	
R488	1-247-807-31	s	CARBON 100 5% 1/4W	
R489	1-218-754-11	s	METAL, CHIP 120k 0.50% 1/10W	
R490	1-216-025-91	s	METAL, CHIP 100 5% 1/10W	
R491	1-216-121-91	s	METAL, CHIP 1M 5% 1/10W	
R492	1-249-389-11	s	CARBON 4.7 5% 1/4W	
R493	1-216-073-00	s	METAL, CHIP 10k 5% 1/10W	
R494	1-216-073-00	s	METAL, CHIP 10k 5% 1/10W	
R495	1-216-121-91	s	METAL, CHIP 1M 5% 1/10W	
R602	1-247-855-11	s	CARBON 10k 5% 1/4W	
RV1	1-238-551-11	s	RES, ADJ CARBON 220k	
*RV2	1-241-784-11	s	RES, ADJ METAL 4.7k	*16
	1-241-783-11	s	RES, ADJ METAL 2.2k	*17
RV3	1-241-783-11	s	RES, ADJ METAL 2.2k	
RV4	1-241-785-11	s	RES, ADJ METAL 10k	
RV201	1-238-551-11	s	RES, ADJ CARBON 220k	
*RV202	1-241-784-11	s	RES, ADJ METAL 4.7k	*16
	1-241-783-11	s	RES, ADJ METAL 2.2k	*17
RV203	1-241-783-11	s	RES, ADJ METAL 2.2k	
RV204	1-241-785-11	s	RES, ADJ METAL 10k	
S1	1-570-602-11	s	SWITCH, DIP 2-CKT	
S2	1-570-602-11	s	SWITCH, DIP 2-CKT	
S201	1-570-602-11	s	SWITCH, DIP 2-CKT	
S202	1-570-602-11	s	SWITCH, DIP 2-CKT	
T1	1-423-658-11	s	TRANSFORMER, RF INPUT	
T2	1-423-658-11	s	TRANSFORMER, RF INPUT	
*T3	1-423-657-11	s	TRANSFORMER, RF INPUT	*1
	1-423-658-11	s	TRANSFORMER, RF INPUT	*2
*T4	1-423-657-11	s	TRANSFORMER, RF INPUT	*1
	1-423-658-11	s	TRANSFORMER, RF INPUT	*2
TH1	1-807-972-11	s	THERMISTOR SV-1715 1.25k	
TH2	1-807-972-11	s	THERMISTOR SV-1715 1.25k	

Note: In this list * marked parts are design changed.
Refer to pages 18-29 to 18-31 for applicable serial numbers.

AR-14A BOARD(for UVW-1400, NTSC)

AR-14A board is used for UVW-1400.

Ref. No. or Q'ty	Part No.	SP	Description	
1pc	A-8275-576-A	o	MOUNTED CIRCUIT BOARD, AR-14A	
1pc	3-179-084-01	s	LEVER (R), PC BOARD	
1pc	3-179-085-01	s	LEVER (L), PC BOARD	
C1	1-163-137-00	s	CERAMIC, CHIP 680pF 5% 50V	
C8	1-126-964-11	s	ELECT 10uF 20% 50V	
C9	1-126-964-11	s	ELECT 10uF 20% 50V	
C10	1-163-033-91	s	CERAMIC, CHIP 0.022uF 50V	
C11	1-163-033-91	s	CERAMIC, CHIP 0.022uF 50V	
C12	1-126-933-11	s	ELECT 100uF 20% 16V	
C13	1-126-933-11	s	ELECT 100uF 20% 16V	
C14	1-126-933-11	s	ELECT 100uF 20% 16V	
C15	1-126-933-11	s	ELECT 100uF 20% 16V	
C16-20	1-163-033-91	s	CERAMIC, CHIP 0.022uF 50V	
C21	1-126-933-11	s	ELECT 100uF 20% 16V	
C101	1-126-947-11	s	ELECT 47uF 20% 35V	
C102	1-126-947-11	s	ELECT 47uF 20% 35V	
C103	1-163-275-11	s	CERAMIC, CHIP 0.001uF 5% 50V	
*C104	1-126-940-11	s	ELECT 330uF 20% 25V	*8
	1-126-950-11	s	ELECT 330uF 20% 35V	*9
C105	1-163-239-11	s	CERAMIC, CHIP 33pF 5% 50V	
C106	1-163-239-11	s	CERAMIC, CHIP 33pF 5% 50V	
C107	1-163-113-00	s	CERAMIC, CHIP 68pF 5% 50V	
C108	1-163-113-00	s	CERAMIC, CHIP 68pF 5% 50V	
C109	1-126-947-11	s	ELECT 47uF 20% 35V	
C110	1-163-251-11	s	CERAMIC, CHIP 100pF 5% 50V	
C111	1-163-251-11	s	CERAMIC, CHIP 100pF 5% 50V	
C112	1-126-933-11	s	ELECT 100uF 20% 16V	
C113	1-126-933-11	s	ELECT 100uF 20% 16V	
C114	1-131-353-00	s	TANTALUM 10uF 10% 35V	
C115	1-130-475-00	s	MYLAR 0.0022uF 5% 50V	
C116	1-130-471-00	s	MYLAR 0.001uF 5% 50V	
C117	1-163-227-11	s	CERAMIC, CHIP 10pF 5% 50V	
C118	1-163-251-11	s	CERAMIC, CHIP 100pF 5% 50V	
C119	1-130-489-00	s	MYLAR 0.033uF 5% 50V	
C120	1-130-473-00	s	MYLAR 0.0015uF 5% 50V	
C121	1-130-494-11	s	MYLAR 0.082uF 5% 50V	
C122	1-126-964-11	s	ELECT 10uF 20% 50V	
C123	1-163-275-11	s	CERAMIC, CHIP 0.001uF 5% 50V	
C124	1-163-251-11	s	CERAMIC, CHIP 100pF 5% 50V	
*C125	1-136-439-11	s	FILM 330pF 5% 630V	*8
*C126	1-136-439-11	s	FILM 330pF 5% 630V	*8
*C127	1-136-439-11	s	FILM 330pF 5% 630V	*8
*C128	1-136-439-11	s	FILM 330pF 5% 630V	*8
*C129	1-136-438-11	s	FILM 270pF 5% 630V	*5
	1-136-478-11	s	FILM 470pF 5% 630V	*41
C130	1-126-964-11	s	ELECT 10uF 20% 50V	
C201	1-126-947-11	s	ELECT 47uF 20% 35V	
C202	1-126-947-11	s	ELECT 47uF 20% 35V	
C203	1-163-275-11	s	CERAMIC, CHIP 0.001uF 5% 50V	
C204	1-126-950-11	s	ELECT 330uF 20% 35V	
C205	1-163-239-11	s	CERAMIC, CHIP 33pF 5% 50V	
C206	1-163-239-11	s	CERAMIC, CHIP 33pF 5% 50V	
C207	1-163-113-00	s	CERAMIC, CHIP 68pF 5% 50V	
C208	1-163-113-00	s	CERAMIC, CHIP 68pF 5% 50V	
C209	1-126-947-11	s	ELECT 47uF 20% 35V	

(AR-14A BOARD(for UVW-1400, NTSC))

Ref. No. or Q'ty	Part No.	SP	Description	
C210	1-163-251-11	s	CERAMIC, CHIP 100pF 5% 50V	
C211	1-163-251-11	s	CERAMIC, CHIP 100pF 5% 50V	
C212	1-126-933-11	s	ELECT 100uF 20% 16V	
C213	1-126-933-11	s	ELECT 100uF 20% 16V	
C214	1-131-353-00	s	TANTALUM 10uF 10% 35V	
C215	1-130-475-00	s	MYLAR 0.0022uF 5% 50V	
C216	1-130-471-00	s	MYLAR 0.001uF 5% 50V	
C217	1-163-227-11	s	CERAMIC, CHIP 10pF 5% 50V	
C218	1-163-251-11	s	CERAMIC, CHIP 100pF 5% 50V	
C219	1-130-489-00	s	MYLAR 0.033uF 5% 50V	
C220	1-130-473-00	s	MYLAR 0.0015uF 5% 50V	
C221	1-130-494-11	s	MYLAR 0.082uF 5% 50V	
C222	1-126-964-11	s	ELECT 10uF 20% 50V	
C223	1-163-275-11	s	CERAMIC, CHIP 0.001uF 5% 50V	
C224	1-163-251-11	s	CERAMIC, CHIP 100pF 5% 50V	
*C225	1-136-439-11	s	FILM 330pF 5% 630V	*8
*C226	1-136-439-11	s	FILM 330pF 5% 630V	*8
*C227	1-136-439-11	s	FILM 330pF 5% 630V	*8
*C228	1-136-439-11	s	FILM 330pF 5% 630V	*8
*C229	1-136-438-11	s	FILM 270pF 5% 630V	*5
	1-136-478-11	s	FILM 470pF 5% 630V	*41
C230	1-126-964-11	s	ELECT 10uF 20% 50V	
C301	1-163-235-11	s	CERAMIC, CHIP 22pF 5% 50V	
C302	1-163-235-11	s	CERAMIC, CHIP 22pF 5% 50V	
C303	1-163-257-11	s	CERAMIC, CHIP 180pF 5% 50V	
C305	1-163-133-00	s	CERAMIC, CHIP 470pF 5% 50V	
C307	1-131-347-00	s	TANTALUM 1uF 10% 35V	
C308	1-131-347-00	s	TANTALUM 1uF 10% 35V	
C309	1-163-033-91	s	CERAMIC, CHIP 0.022uF 50V	
C312	1-131-347-00	s	TANTALUM 1uF 10% 35V	
C313	1-163-275-11	s	CERAMIC, CHIP 0.001uF 5% 50V	
C322	1-131-347-00	s	TANTALUM 1uF 10% 35V	
C323	1-163-275-11	s	CERAMIC, CHIP 0.001uF 5% 50V	
*C364	1-109-900-11	s	CERAMIC, CHIP 470pF 5% 200V	*9
*C374	1-109-900-11	s	CERAMIC, CHIP 470pF 5% 200V	*9
CN112	1-573-600-21	s	CONNECTOR, PHEC 100P, MALE	
D1	8-719-123-85	s	DIODE 1SS304	
D101	8-719-941-23	s	DIODE DA204U	
D102	8-719-941-23	s	DIODE DA204U	
D103	8-719-941-23	s	DIODE DA204U	
D201	8-719-941-23	s	DIODE DA204U	
D202	8-719-941-23	s	DIODE DA204U	
D203	8-719-941-23	s	DIODE DA204U	
D301	8-719-123-82	s	DIODE 1SS303-T1	
D302	8-719-123-82	s	DIODE 1SS303-T1	
D303	8-719-123-82	s	DIODE 1SS303-T1	
D304	8-719-157-23	s	DIODE RD4.7M-B	
D305	8-719-123-82	s	DIODE 1SS303-T1	
D306	8-719-157-23	s	DIODE RD4.7M-B	
*D401	8-719-123-82	s	DIODE 1SS303-T1	*23
*D402	8-719-123-82	s	DIODE 1SS303-T1	*23
IC1	8-759-140-53	s	IC UPD4053BC	
IC3	8-759-917-18	s	IC SN74HCU04AN	
IC5	8-759-168-20	s	IC TA78L09S	
IC6	8-759-700-68	s	IC NJM79L09A	
IC7	8-759-168-20	s	IC TA78L09S	
IC101	8-759-705-58	s	IC NJM4558D-D	

Note: In this list * marked parts are design changed.
Refer to pages 18-29 to 18-31 for applicable serial numbers.

(AR-14A BOARD(for UVW-1400, NTSC))

Ref. No. or Q'ty	Part No.	SP	Description	
IC102	8-759-705-58	s	IC NJM4558D-D	
IC103	8-759-705-58	s	IC NJM4558D-D	
IC104	8-759-705-58	s	IC NJM4558D-D	
IC201	8-759-705-58	s	IC NJM4558D-D	
IC202	8-759-705-58	s	IC NJM4558D-D	
IC203	8-759-705-58	s	IC NJM4558D-D	
IC204	8-759-705-58	s	IC NJM4558D-D	
IC301	8-759-917-18	s	IC SN74HCU04AN	
IC302	8-759-917-37	s	IC MC74HC4024N	
IC303	8-759-038-14	s	IC MC74HC4538AN	
IC304	8-759-916-16	s	IC MC74HC08AN	
IC305	8-759-921-19	s	IC SN74HC161N	
IC306	8-759-032-81	s	IC MC74HC74N	
IC307	8-759-917-18	s	IC SN74HCU04AN	
IC308	8-759-916-16	s	IC MC74HC08AN	
IC309	8-759-135-80	s	IC UPC358C	
L1	1-410-470-11	s	INDUCTOR 10uH	
L2	1-410-470-11	s	INDUCTOR 10uH	
L101	1-410-478-11	s	INDUCTOR 47uH	
L201	1-410-478-11	s	INDUCTOR 47uH	
LV101	1-410-853-21	s	COIL, VAR 4.5uH	
LV201	1-410-853-21	s	COIL, VAR 4.5uH	
PS1	⚠ 1-532-727-11	s	LINK, IC 0.25A	
PS2	⚠ 1-532-727-11	s	LINK, IC 0.25A	
Q1	8-729-117-32	s	TRANSISTOR 2SC4177	
Q2	8-729-140-63	s	TRANSISTOR 2SA1611-M5M6	
Q101	8-729-209-06	s	TRANSISTOR 2SC4213-A	
Q102	8-729-905-18	s	TRANSISTOR DTC144EU	
Q103	8-729-905-12	s	TRANSISTOR DTA144EU	
Q104	8-729-140-98	s	TRANSISTOR 2SD773-3	
Q105	8-729-140-98	s	TRANSISTOR 2SD773-3	
Q201	8-729-209-06	s	TRANSISTOR 2SC4213-A	
Q202	8-729-905-18	s	TRANSISTOR DTC144EU	
Q203	8-729-905-12	s	TRANSISTOR DTA144EU	
Q204	8-729-140-98	s	TRANSISTOR 2SD773-3	
Q205	8-729-140-98	s	TRANSISTOR 2SD773-3	
Q301	8-729-203-30	s	TRANSISTOR 2SJ106Y	
Q302	8-729-140-93	s	TRANSISTOR 2SB733-34	
Q303	8-729-203-30	s	TRANSISTOR 2SJ106Y	
Q304	8-729-140-93	s	TRANSISTOR 2SB733-34	
Q305	8-729-140-98	s	TRANSISTOR 2SD773-3	
Q306	8-729-140-98	s	TRANSISTOR 2SD773-3	
*R1	1-216-686-11	s	METAL, CHIP 30k 0.5% 1/10W	*16
	1-216-682-11	s	METAL, CHIP 20k 0.5% 1/10W	*17
*R2	1-216-686-11	s	METAL, CHIP 30k 0.5% 1/10W	*16
	1-216-682-11	s	METAL, CHIP 20k 0.5% 1/10W	*17
R3	1-216-097-91	s	METAL, CHIP 100k 5% 1/10W	
R4	1-216-073-00	s	METAL, CHIP 10k 5% 1/10W	
R5	1-216-097-91	s	METAL, CHIP 100k 5% 1/10W	
R6	1-216-073-00	s	METAL, CHIP 10k 5% 1/10W	
R7	1-216-073-00	s	METAL, CHIP 10k 5% 1/10W	
R8	1-216-097-91	s	METAL, CHIP 100k 5% 1/10W	
R9	1-216-049-91	s	METAL, CHIP 1k 5% 1/10W	
R18-25	1-216-097-91	s	METAL, CHIP 100k 5% 1/10W	
R26	1-216-049-91	s	METAL, CHIP 1k 5% 1/10W	
R27	1-216-073-00	s	METAL, CHIP 10k 5% 1/10W	

(AR-14A BOARD(for UVW-1400, NTSC))

Ref. No. or Q'ty	Part No.	SP	Description	
R103	1-208-799-11	s	METAL, CHIP 5.1k 0.5% 1/10W	
R104	1-208-799-11	s	METAL, CHIP 5.1k 0.5% 1/10W	
R105	1-216-642-11	s	METAL, CHIP 430 0.5% 1/10W	
R106	1-216-641-11	s	METAL, CHIP 390 0.5% 1/10W	
R107	1-216-633-11	s	METAL, CHIP 180 0.5% 1/10W	
R108	1-216-097-91	s	METAL, CHIP 100k 5% 1/10W	
R109	1-216-097-91	s	METAL, CHIP 100k 5% 1/10W	
R110	1-216-061-00	s	METAL, CHIP 3.3k 5% 1/10W	
R111	1-216-061-00	s	METAL, CHIP 3.3k 5% 1/10W	
R112	1-216-061-00	s	METAL, CHIP 3.3k 5% 1/10W	
R113	1-216-049-91	s	METAL, CHIP 1k 5% 1/10W	
R114	1-216-049-91	s	METAL, CHIP 1k 5% 1/10W	
R115	1-216-065-00	s	METAL, CHIP 4.7k 5% 1/10W	
R116	1-216-065-00	s	METAL, CHIP 4.7k 5% 1/10W	
R117	1-216-025-91	s	METAL, CHIP 100 5% 1/10W	
R118	1-216-057-00	s	METAL, CHIP 2.2k 5% 1/10W	
R119-122	1-216-073-00	s	METAL, CHIP 10k 5% 1/10W	
*R123	1-216-057-00	s	METAL, CHIP 2.2k 5% 1/10W	*16
	1-216-073-00	s	METAL, CHIP 10k 5% 1/10W	*17
R124	1-216-057-00	s	METAL, CHIP 2.2k 5% 1/10W	
R125	1-216-049-91	s	METAL, CHIP 1k 5% 1/10W	
R126	1-216-073-00	s	METAL, CHIP 10k 5% 1/10W	
*R127	1-215-444-00	s	METAL 9.1k 1% 1/6W	*8
	1-216-674-11	s	METAL, CHIP 9.1k 0.5% 1/10W	*9
R128	1-216-097-91	s	METAL, CHIP 100k 5% 1/10W	
R129	1-216-109-00	s	METAL, CHIP 330k 5% 1/10W	
R130	1-216-095-00	s	METAL, CHIP 82k 5% 1/10W	
R131	1-216-295-91	s	RES, CHIP 0	
R132	1-216-097-91	s	METAL, CHIP 100k 5% 1/10W	
R133	1-216-041-00	s	METAL, CHIP 470 5% 1/10W	
R134	1-216-041-00	s	METAL, CHIP 470 5% 1/10W	
R135	1-216-009-00	s	METAL, CHIP 22 5% 1/10W	
R136	1-216-045-00	s	METAL, CHIP 680 5% 1/10W	
R137	1-216-077-00	s	METAL, CHIP 15k 5% 1/10W	
R138	1-216-089-91	s	METAL, CHIP 47k 5% 1/10W	
R139	⚠ 1-215-905-11	s	METAL 10 5% 3W	
R140	⚠ 1-215-905-11	s	METAL 10 5% 3W	
R141	1-216-097-91	s	METAL, CHIP 100k 5% 1/10W	
R142	1-216-097-91	s	METAL, CHIP 100k 5% 1/10W	
R143	1-216-089-91	s	METAL, CHIP 47k 5% 1/10W	
R146	1-216-073-00	s	METAL, CHIP 10k 5% 1/10W	
R150	1-216-097-91	s	METAL, CHIP 100k 5% 1/10W	
*R156	1-215-435-00	s	METAL 3.9k 1% 1/6W	*8
	1-216-665-11	s	METAL, CHIP 3.9k 0.5% 1/10W	*9
R203	1-208-799-11	s	METAL, CHIP 5.1k 0.5% 1/10W	
R204	1-208-799-11	s	METAL, CHIP 5.1k 0.5% 1/10W	
R205	1-216-642-11	s	METAL, CHIP 430 0.5% 1/10W	
R206	1-216-641-11	s	METAL, CHIP 390 0.5% 1/10W	
R207	1-216-633-11	s	METAL, CHIP 180 0.5% 1/10W	
R208	1-216-097-91	s	METAL, CHIP 100k 5% 1/10W	
R209	1-216-097-91	s	METAL, CHIP 100k 5% 1/10W	
R210	1-216-061-00	s	METAL, CHIP 3.3k 5% 1/10W	
R211	1-216-061-00	s	METAL, CHIP 3.3k 5% 1/10W	
R212	1-216-061-00	s	METAL, CHIP 3.3k 5% 1/10W	
R213	1-216-049-91	s	METAL, CHIP 1k 5% 1/10W	
R214	1-216-049-91	s	METAL, CHIP 1k 5% 1/10W	
R215	1-216-065-00	s	METAL, CHIP 4.7k 5% 1/10W	
R216	1-216-065-00	s	METAL, CHIP 4.7k 5% 1/10W	
R217	1-216-025-91	s	METAL, CHIP 100 5% 1/10W	

Note: In this list * marked parts are design changed.
Refer to pages 18-29 to 18-31 for applicable serial numbers.

(AR-14A BOARD(for UVW-1400, NTSC))

Ref. No. or Q'ty	Part No.	SP	Description	
R218	1-216-057-00	s	METAL, CHIP 2.2k 5% 1/10W	
R219-222	1-216-073-00	s	METAL, CHIP 10k 5% 1/10W	
*R223	1-216-057-00	s	METAL, CHIP 2.2k 5% 1/10W	*16
	1-216-073-00	s	METAL, CHIP 10k 5% 1/10W	*17
R224	1-216-057-00	s	METAL, CHIP 2.2k 5% 1/10W	
R225	1-216-049-91	s	METAL, CHIP 1k 5% 1/10W	
R226	1-216-073-00	s	METAL, CHIP 10k 5% 1/10W	
*R227	1-215-444-00	s	METAL 9.1k 1% 1/6W	*8
	1-216-674-11	s	METAL, CHIP 9.1k 0.5% 1/10W	*9
R228	1-216-097-91	s	METAL, CHIP 100k 5% 1/10W	
R229	1-216-109-00	s	METAL, CHIP 330k 5% 1/10W	
R230	1-216-095-00	s	METAL, CHIP 82k 5% 1/10W	
R231	1-216-295-91	s	RES, CHIP 0	
R232	1-216-097-91	s	METAL, CHIP 100k 5% 1/10W	
R233	1-216-041-00	s	METAL, CHIP 470 5% 1/10W	
R234	1-216-041-00	s	METAL, CHIP 470 5% 1/10W	
R235	1-216-009-00	s	METAL, CHIP 22 5% 1/10W	
R236	1-216-045-00	s	METAL, CHIP 680 5% 1/10W	
R237	1-216-077-00	s	METAL, CHIP 15k 5% 1/10W	
R238	1-216-089-91	s	METAL, CHIP 47k 5% 1/10W	
R239	⚠ 1-215-905-11	s	METAL 10 5% 3W	
R240	⚠ 1-215-905-11	s	METAL 10 5% 3W	
R241	1-216-097-91	s	METAL, CHIP 100k 5% 1/10W	
R242	1-216-097-91	s	METAL, CHIP 100k 5% 1/10W	
R243	1-216-089-91	s	METAL, CHIP 47k 5% 1/10W	
R246	1-216-073-00	s	METAL, CHIP 10k 5% 1/10W	
R250	1-216-097-91	s	METAL, CHIP 100k 5% 1/10W	
*R256	1-215-435-00	s	METAL 3.9k 1% 1/6W	*8
	1-216-665-11	s	METAL, CHIP 3.9k 0.5% 1/10W	*9
R301	1-216-121-91	s	METAL, CHIP 1M 5% 1/10W	
R302	1-216-097-91	s	METAL, CHIP 100k 5% 1/10W	
R303	1-216-677-11	s	METAL, CHIP 12k 0.5% 1/10W	
R304	1-216-049-91	s	METAL, CHIP 1k 5% 1/10W	
R305	1-208-803-11	s	METAL, CHIP 7.5k 0.5% 1/10W	
R306	1-216-049-91	s	METAL, CHIP 1k 5% 1/10W	
R307	1-216-089-91	s	METAL, CHIP 47k 5% 1/10W	
R308	1-216-089-91	s	METAL, CHIP 47k 5% 1/10W	
R309	1-216-057-00	s	METAL, CHIP 2.2k 5% 1/10W	
R310	1-216-057-00	s	METAL, CHIP 2.2k 5% 1/10W	
R311	1-216-057-00	s	METAL, CHIP 2.2k 5% 1/10W	
R312	1-216-057-00	s	METAL, CHIP 2.2k 5% 1/10W	
R313	1-216-065-00	s	METAL, CHIP 4.7k 5% 1/10W	
R314	1-216-081-00	s	METAL, CHIP 22k 5% 1/10W	
R315	1-216-689-11	s	METAL, CHIP 39k 0.5% 1/10W	
R316	1-208-806-11	s	METAL, CHIP 10k 0.5% 1/10W	
R317	1-216-673-11	s	METAL, CHIP 8.2k 0.5% 1/10W	
R318	1-216-077-00	s	METAL, CHIP 15k 5% 1/10W	
R319	1-216-077-00	s	METAL, CHIP 15k 5% 1/10W	
R320	1-216-057-00	s	METAL, CHIP 2.2k 5% 1/10W	
R321	1-216-065-00	s	METAL, CHIP 4.7k 5% 1/10W	
R322	1-216-085-00	s	METAL, CHIP 33k 5% 1/10W	
R323	1-216-065-00	s	METAL, CHIP 4.7k 5% 1/10W	
R324	1-216-081-00	s	METAL, CHIP 22k 5% 1/10W	
R325	1-216-689-11	s	METAL, CHIP 39k 0.5% 1/10W	
R326	1-208-806-11	s	METAL, CHIP 10k 0.5% 1/10W	
R327	1-216-673-11	s	METAL, CHIP 8.2k 0.5% 1/10W	
R328	1-216-077-00	s	METAL, CHIP 15k 5% 1/10W	
R329	1-216-077-00	s	METAL, CHIP 15k 5% 1/10W	
R330	1-216-057-00	s	METAL, CHIP 2.2k 5% 1/10W	

(AR-14A BOARD(for UVW-1400, NTSC))

Ref. No. or Q'ty	Part No.	SP	Description	
R331	1-216-065-00	s	METAL, CHIP 4.7k 5% 1/10W	
R332	1-216-085-00	s	METAL, CHIP 33k 5% 1/10W	
*RV106	1-241-785-11	s	RES, ADJ METAL 10k	*16
	1-241-783-11	s	RES, ADJ METAL 2.2k	*17
RV107	1-241-786-11	s	RES, ADJ METAL 22k	
*RV206	1-241-785-11	s	RES, ADJ METAL 10k	*16
	1-241-783-11	s	RES, ADJ METAL 2.2k	*17
RV207	1-241-786-11	s	RES, ADJ METAL 22k	
RV301	1-241-765-11	s	RES, ADJ METAL 22k	
RV302	1-241-765-11	s	RES, ADJ METAL 22k	
S103	1-570-602-11	s	SWITCH, DIP 2-CKT	
S203	1-570-602-11	s	SWITCH, DIP 2-CKT	
T101	1-423-870-11	s	TRANSFORMER, BIAS OSC	
T201	1-423-870-11	s	TRANSFORMER, BIAS OSC	
*TH1	1-800-199-00	s	THERMISTOR S-1250	*8
	1-807-972-11	s	THERMISTOR SV-1715 1.25k	*9
*TH2	1-800-199-00	s	THERMISTOR S-1250	*8
	1-807-972-11	s	THERMISTOR SV-1715 1.25k	*9
X301	1-567-861-21	s	CRYSTAL 4.194304MHz	

Note: In this list * marked parts are design changed.
Refer to pages 18-29 to 18-31 for applicable serial numbers.

AR-14AP BOARD(for UVW-1400P, PAL)

Ref. No. or Q'ty	Part No.	SP	Description	
AR-14AP board is used for UVW-1400P.				
1pc	A-8275-609-A	o	MOUNTED CIRCUIT BOARD, AR-14AP	
1pc	3-179-084-01	s	LEVER (R), PC BOARD	
1pc	3-179-085-01	s	LEVER (L), PC BOARD	
C1	1-163-137-00	s	CERAMIC, CHIP 680pF 5% 50V	
C8	1-126-964-11	s	ELECT 10uF 20% 50V	
C9	1-126-964-11	s	ELECT 10uF 20% 50V	
C10	1-163-033-91	s	CERAMIC, CHIP 0.022uF 50V	
C11	1-163-033-91	s	CERAMIC, CHIP 0.022uF 50V	
C12	1-126-933-11	s	ELECT 100uF 20% 16V	
C13	1-126-933-11	s	ELECT 100uF 20% 16V	
C14	1-126-933-11	s	ELECT 100uF 20% 16V	
C15	1-126-933-11	s	ELECT 100uF 20% 16V	
C16-20	1-163-033-91	s	CERAMIC, CHIP 0.022uF 50V	
C21	1-126-933-11	s	ELECT 100uF 20% 16V	
C101	1-126-947-11	s	ELECT 47uF 20% 35V	
C102	1-126-947-11	s	ELECT 47uF 20% 35V	
C103	1-163-275-11	s	CERAMIC, CHIP 0.001uF 5% 50V	
C104	1-126-950-11	s	ELECT 330uF 20% 35V	
C105	1-163-239-11	s	CERAMIC, CHIP 33pF 5% 50V	
C106	1-163-239-11	s	CERAMIC, CHIP 33pF 5% 50V	
C107	1-163-113-00	s	CERAMIC, CHIP 68pF 5% 50V	
C108	1-163-113-00	s	CERAMIC, CHIP 68pF 5% 50V	
C109	1-126-947-11	s	ELECT 47uF 20% 35V	
C110	1-163-251-11	s	CERAMIC, CHIP 100pF 5% 50V	
C111	1-163-251-11	s	CERAMIC, CHIP 100pF 5% 50V	
C112	1-126-933-11	s	ELECT 100uF 20% 16V	
C113	1-126-933-11	s	ELECT 100uF 20% 16V	
C114	1-131-353-00	s	TANTALUM 10uF 10% 35V	
C115	1-130-476-00	s	MYLAR 0.0027uF 5% 50V	
C116	1-130-474-00	s	MYLAR 0.0018uF 5% 50V	
C117	1-163-227-11	s	CERAMIC, CHIP 10pF 5% 50V	
C119	1-130-489-00	s	MYLAR 0.033uF 5% 50V	
C120	1-130-476-00	s	MYLAR 0.0027uF 5% 50V	
C121	1-130-494-11	s	MYLAR 0.082uF 5% 50V	
C122	1-126-964-11	s	ELECT 10uF 20% 50V	
C123	1-163-275-11	s	CERAMIC, CHIP 0.001uF 5% 50V	
C124	1-163-251-11	s	CERAMIC, CHIP 100pF 5% 50V	
*C125	1-136-439-11	s	FILM 330pF 5% 630V	*8
*C126	1-136-439-11	s	FILM 330pF 5% 630V	*8
*C127	1-136-439-11	s	FILM 330pF 5% 630V	*8
*C128	1-136-439-11	s	FILM 330pF 5% 630V	*8
*C129	1-136-438-11	s	FILM 270pF 5% 630V	*5
	1-136-478-11	s	FILM 470pF 5% 630V	*41
C130	1-126-964-11	s	ELECT 10uF 20% 50V	
C201	1-126-947-11	s	ELECT 47uF 20% 35V	
C202	1-126-947-11	s	ELECT 47uF 20% 35V	
C203	1-163-275-11	s	CERAMIC, CHIP 0.001uF 5% 50V	
C204	1-126-950-11	s	ELECT 330uF 20% 35V	
C205	1-163-239-11	s	CERAMIC, CHIP 33pF 5% 50V	
C206	1-163-239-11	s	CERAMIC, CHIP 33pF 5% 50V	
C207	1-163-113-00	s	CERAMIC, CHIP 68pF 5% 50V	
C208	1-163-113-00	s	CERAMIC, CHIP 68pF 5% 50V	
C209	1-126-947-11	s	ELECT 47uF 20% 35V	
C210	1-163-251-11	s	CERAMIC, CHIP 100pF 5% 50V	
C211	1-163-251-11	s	CERAMIC, CHIP 100pF 5% 50V	
C212	1-126-933-11	s	ELECT 100uF 20% 16V	
C213	1-126-933-11	s	ELECT 100uF 20% 16V	

(AR-14AP BOARD(for UVW-1400P, PAL))

Ref. No. or Q'ty	Part No.	SP	Description	
C214	1-131-353-00	s	TANTALUM 10uF 10% 35V	
C215	1-130-476-00	s	MYLAR 0.0027uF 5% 50V	
C216	1-130-474-00	s	MYLAR 0.0018uF 5% 50V	
C217	1-163-227-11	s	CERAMIC, CHIP 10pF 5% 50V	
C219	1-130-489-00	s	MYLAR 0.033uF 5% 50V	
C220	1-130-476-00	s	MYLAR 0.0027uF 5% 50V	
C221	1-130-494-11	s	MYLAR 0.082uF 5% 50V	
C222	1-126-964-11	s	ELECT 10uF 20% 50V	
C223	1-163-275-11	s	CERAMIC, CHIP 0.001uF 5% 50V	
C224	1-163-251-11	s	CERAMIC, CHIP 100pF 5% 50V	
*C225	1-136-439-11	s	FILM 330pF 5% 630V	*8
*C226	1-136-439-11	s	FILM 330pF 5% 630V	*8
*C227	1-136-439-11	s	FILM 330pF 5% 630V	*8
*C228	1-136-439-11	s	FILM 330pF 5% 630V	*8
*C229	1-136-438-11	s	FILM 270pF 5% 630V	*5
	1-136-478-11	s	FILM 470pF 5% 630V	*41
C230	1-126-964-11	s	ELECT 10uF 20% 50V	
C301	1-163-235-11	s	CERAMIC, CHIP 22pF 5% 50V	
C302	1-163-235-11	s	CERAMIC, CHIP 22pF 5% 50V	
C303	1-163-257-11	s	CERAMIC, CHIP 180pF 5% 50V	
C305	1-163-133-00	s	CERAMIC, CHIP 470pF 5% 50V	
C307	1-131-347-00	s	TANTALUM 1uF 10% 35V	
C308	1-131-347-00	s	TANTALUM 1uF 10% 35V	
C309	1-163-033-91	s	CERAMIC, CHIP 0.022uF 50V	
C312	1-131-347-00	s	TANTALUM 1uF 10% 35V	
C313	1-163-275-11	s	CERAMIC, CHIP 0.001uF 5% 50V	
C322	1-131-347-00	s	TANTALUM 1uF 10% 35V	
C323	1-163-275-11	s	CERAMIC, CHIP 0.001uF 5% 50V	
*C364	1-109-900-11	s	CERAMIC, CHIP 470pF 5% 200V	*9
*C374	1-109-900-11	s	CERAMIC, CHIP 470pF 5% 200V	*9
CN112	1-573-600-21	s	CONNECTOR, PHEC 100P, MALE	
D1	8-719-123-85	s	DIODE 1SS304	
D101	8-719-941-23	s	DIODE DA204U	
D102	8-719-941-23	s	DIODE DA204U	
D103	8-719-941-23	s	DIODE DA204U	
D201	8-719-941-23	s	DIODE DA204U	
D202	8-719-941-23	s	DIODE DA204U	
D203	8-719-941-23	s	DIODE DA204U	
D301	8-719-123-82	s	DIODE 1SS303-T1	
D302	8-719-123-82	s	DIODE 1SS303-T1	
D303	8-719-123-82	s	DIODE 1SS303-T1	
D304	8-719-157-23	s	DIODE RD4.7M-B	
D305	8-719-123-82	s	DIODE 1SS303-T1	
D306	8-719-157-23	s	DIODE RD4.7M-B	
*D401	8-719-123-82	s	DIODE 1SS303-T1	*9
*D402	8-719-123-82	s	DIODE 1SS303-T1	*9
IC1	8-759-140-53	s	IC UPD4053BC	
IC3	8-759-917-18	s	IC SN74HCU04AN	
IC5	8-759-168-20	s	IC TA78L09S	
IC6	8-759-700-68	s	IC NJM79L09A	
IC7	8-759-168-20	s	IC TA78L09S	
IC101	8-759-705-58	s	IC NJM4558D-D	
IC102	8-759-705-58	s	IC NJM4558D-D	
IC103	8-759-705-58	s	IC NJM4558D-D	
IC104	8-759-705-58	s	IC NJM4558D-D	
IC201	8-759-705-58	s	IC NJM4558D-D	
IC202	8-759-705-58	s	IC NJM4558D-D	

Note: In this list * marked parts are design changed.
Refer to pages 18-29 to 18-31 for applicable serial numbers.

(AR-14AP BOARD(for UVW-1400P, PAL))

Ref. No. or Q'ty	Part No.	SP	Description	
IC203	8-759-705-58	s	IC NJM4558D-D	
IC204	8-759-705-58	s	IC NJM4558D-D	
IC301	8-759-917-18	s	IC SN74HCU04AN	
IC302	8-759-917-37	s	IC MC74HC4024N	
IC303	8-759-038-14	s	IC MC74HC4538AN	
IC304	8-759-916-16	s	IC MC74HC08AN	
IC305	8-759-921-19	s	IC SN74HC161N	
IC306	8-759-032-81	s	IC MC74HC74N	
IC307	8-759-917-18	s	IC SN74HCU04AN	
IC308	8-759-916-16	s	IC MC74HC08AN	
IC309	8-759-135-80	s	IC UPC358C	
L1	1-410-470-11	s	INDUCTOR 10uH	
L2	1-410-470-11	s	INDUCTOR 10uH	
L101	1-410-478-11	s	INDUCTOR 47uH	
L201	1-410-478-11	s	INDUCTOR 47uH	
LV101	1-410-853-21	s	COIL, VAR 4.5uH	
LV201	1-410-853-21	s	COIL, VAR 4.5uH	
PS1	⚠ 1-532-727-11	s	LINK, IC 0.25A	
PS2	⚠ 1-532-727-11	s	LINK, IC 0.25A	
Q1	8-729-117-32	s	TRANSISTOR 2SC4177	
Q2	8-729-140-63	s	TRANSISTOR 2SA1611-M5M6	
Q101	8-729-209-06	s	TRANSISTOR 2SC4213-A	
Q102	8-729-905-18	s	TRANSISTOR DTC144EU	
Q103	8-729-905-12	s	TRANSISTOR DTA144EU	
Q104	8-729-140-98	s	TRANSISTOR 2SD773-3	
Q105	8-729-140-98	s	TRANSISTOR 2SD773-3	
Q201	8-729-209-06	s	TRANSISTOR 2SC4213-A	
Q202	8-729-905-18	s	TRANSISTOR DTC144EU	
Q203	8-729-905-12	s	TRANSISTOR DTA144EU	
Q204	8-729-140-98	s	TRANSISTOR 2SD773-3	
Q205	8-729-140-98	s	TRANSISTOR 2SD773-3	
Q301	8-729-203-30	s	TRANSISTOR 2SJ106Y	
Q302	8-729-140-93	s	TRANSISTOR 2SB733-34	
Q303	8-729-203-30	s	TRANSISTOR 2SJ106Y	
Q304	8-729-140-93	s	TRANSISTOR 2SB733-34	
Q305	8-729-140-98	s	TRANSISTOR 2SD773-3	
Q306	8-729-140-98	s	TRANSISTOR 2SD773-3	
*R1	1-216-686-11	s	METAL, CHIP 30k 0.5% 1/10W	*16
	1-216-682-11	s	METAL, CHIP 20k 0.5% 1/10W	*17
*R2	1-216-686-11	s	METAL, CHIP 30k 0.5% 1/10W	*16
	1-216-682-11	s	METAL, CHIP 20k 0.5% 1/10W	*17
R3	1-216-097-91	s	METAL, CHIP 100k 5% 1/10W	
R4	1-216-073-00	s	METAL, CHIP 10k 5% 1/10W	
R5	1-216-097-91	s	METAL, CHIP 100k 5% 1/10W	
R6	1-216-073-00	s	METAL, CHIP 10k 5% 1/10W	
R7	1-216-073-00	s	METAL, CHIP 10k 5% 1/10W	
R8	1-216-097-91	s	METAL, CHIP 100k 5% 1/10W	
R9	1-216-049-91	s	METAL, CHIP 1k 5% 1/10W	
R18-25	1-216-097-91	s	METAL, CHIP 100k 5% 1/10W	
R26	1-216-049-91	s	METAL, CHIP 1k 5% 1/10W	
R27	1-216-073-00	s	METAL, CHIP 10k 5% 1/10W	
R103	1-208-799-11	s	METAL, CHIP 5.1k 0.5% 1/10W	
R104	1-208-799-11	s	METAL, CHIP 5.1k 0.5% 1/10W	
R105	1-216-642-11	s	METAL, CHIP 430 0.5% 1/10W	
R106	1-216-641-11	s	METAL, CHIP 390 0.5% 1/10W	
R107	1-216-633-11	s	METAL, CHIP 180 0.5% 1/10W	

(AR-14AP BOARD(for UVW-1400P, PAL))

Ref. No. or Q'ty	Part No.	SP	Description	
R108	1-216-097-91	s	METAL, CHIP 100k 5% 1/10W	
R109	1-216-097-91	s	METAL, CHIP 100k 5% 1/10W	
R110	1-216-061-00	s	METAL, CHIP 3.3k 5% 1/10W	
R111	1-216-061-00	s	METAL, CHIP 3.3k 5% 1/10W	
R112	1-216-061-00	s	METAL, CHIP 3.3k 5% 1/10W	
R113	1-216-049-91	s	METAL, CHIP 1k 5% 1/10W	
R114	1-216-049-91	s	METAL, CHIP 1k 5% 1/10W	
R115	1-216-065-00	s	METAL, CHIP 4.7k 5% 1/10W	
R116	1-216-065-00	s	METAL, CHIP 4.7k 5% 1/10W	
R117	1-216-025-91	s	METAL, CHIP 100 5% 1/10W	
R118	1-216-057-00	s	METAL, CHIP 2.2k 5% 1/10W	
R119	1-216-073-00	s	METAL, CHIP 10k 5% 1/10W	
R120	1-216-073-00	s	METAL, CHIP 10k 5% 1/10W	
R121	1-216-073-00	s	METAL, CHIP 10k 5% 1/10W	
R122	1-216-073-00	s	METAL, CHIP 10k 5% 1/10W	
*R123	1-216-057-00	s	METAL, CHIP 2.2k 5% 1/10W	*16
	1-216-073-00	s	METAL, CHIP 10k 5% 1/10W	*17
R124	1-216-057-00	s	METAL, CHIP 2.2k 5% 1/10W	
R125	1-216-049-91	s	METAL, CHIP 1k 5% 1/10W	
R126	1-216-073-00	s	METAL, CHIP 10k 5% 1/10W	
*R127	1-215-444-00	s	METAL 9.1k 1% 1/6W	*8
	1-216-673-11	s	METAL, CHIP 8.2k 0.5% 1/10W	*9
R128	1-216-071-00	s	METAL, CHIP 8.2k 5% 1/10W	
R130	1-216-095-00	s	METAL, CHIP 82k 5% 1/10W	
R131	1-216-295-91	s	RES, CHIP 0	
R132	1-216-097-91	s	METAL, CHIP 100k 5% 1/10W	
R133	1-216-041-00	s	METAL, CHIP 470 5% 1/10W	
R134	1-216-041-00	s	METAL, CHIP 470 5% 1/10W	
R135	1-216-009-00	s	METAL, CHIP 22 5% 1/10W	
R136	1-216-045-00	s	METAL, CHIP 680 5% 1/10W	
R137	1-216-077-00	s	METAL, CHIP 15k 5% 1/10W	
R138	1-216-089-91	s	METAL, CHIP 47k 5% 1/10W	
R139	⚠ 1-215-905-11	s	METAL 10 5% 3W	
R140	⚠ 1-215-905-11	s	METAL 10 5% 3W	
R141	1-216-097-91	s	METAL, CHIP 100k 5% 1/10W	
R142	1-216-097-91	s	METAL, CHIP 100k 5% 1/10W	
R143	1-216-089-91	s	METAL, CHIP 47k 5% 1/10W	
R146	1-216-073-00	s	METAL, CHIP 10k 5% 1/10W	
R150	1-216-097-91	s	METAL, CHIP 100k 5% 1/10W	
*R156	1-215-435-00	s	METAL 3.9k 1% 1/6W	*8
	1-216-659-11	s	METAL, CHIP 2.2k 0.5% 1/10W	*9
R203	1-208-799-11	s	METAL, CHIP 5.1k 0.5% 1/10W	
R204	1-208-799-11	s	METAL, CHIP 5.1k 0.5% 1/10W	
R205	1-216-642-11	s	METAL, CHIP 430 0.5% 1/10W	
R206	1-216-641-11	s	METAL, CHIP 390 0.5% 1/10W	
R207	1-216-633-11	s	METAL, CHIP 180 0.5% 1/10W	
R208	1-216-097-91	s	METAL, CHIP 100k 5% 1/10W	
R209	1-216-097-91	s	METAL, CHIP 100k 5% 1/10W	
R210	1-216-061-00	s	METAL, CHIP 3.3k 5% 1/10W	
R211	1-216-061-00	s	METAL, CHIP 3.3k 5% 1/10W	
R212	1-216-061-00	s	METAL, CHIP 3.3k 5% 1/10W	
R213	1-216-049-91	s	METAL, CHIP 1k 5% 1/10W	
R214	1-216-049-91	s	METAL, CHIP 1k 5% 1/10W	
R215	1-216-065-00	s	METAL, CHIP 4.7k 5% 1/10W	
R216	1-216-065-00	s	METAL, CHIP 4.7k 5% 1/10W	
R217	1-216-025-91	s	METAL, CHIP 100 5% 1/10W	
R218	1-216-057-00	s	METAL, CHIP 2.2k 5% 1/10W	
R219	1-216-073-00	s	METAL, CHIP 10k 5% 1/10W	

Note: In this list * marked parts are design changed.
Refer to pages 18-29 to 18-31 for applicable serial numbers.

(AR-14AP BOARD(for UVW-1400P, PAL))

Ref. No. or Q'ty	Part No.	SP	Description	
R220	1-216-073-00	s	METAL, CHIP 10k 5% 1/10W	
R221	1-216-073-00	s	METAL, CHIP 10k 5% 1/10W	
R222	1-216-073-00	s	METAL, CHIP 10k 5% 1/10W	
*R223	1-216-057-00	s	METAL, CHIP 2.2k 5% 1/10W	*16
	1-216-073-00	s	METAL, CHIP 10k 5% 1/10W	*17
R224	1-216-057-00	s	METAL, CHIP 2.2k 5% 1/10W	
R225	1-216-049-91	s	METAL, CHIP 1k 5% 1/10W	
R226	1-216-073-00	s	METAL, CHIP 10k 5% 1/10W	
*R227	1-215-444-00	s	METAL 9.1k 1% 1/6W	*8
	1-216-673-11	s	METAL, CHIP 8.2k 0.5% 1/10W	*9
R228	1-216-071-00	s	METAL, CHIP 8.2k 5% 1/10W	
R230	1-216-095-00	s	METAL, CHIP 82k 5% 1/10W	
R231	1-216-295-91	s	RES, CHIP 0	
R232	1-216-097-91	s	METAL, CHIP 100k 5% 1/10W	
R233	1-216-041-00	s	METAL, CHIP 470 5% 1/10W	
R234	1-216-041-00	s	METAL, CHIP 470 5% 1/10W	
R235	1-216-009-00	s	METAL, CHIP 22 5% 1/10W	
R236	1-216-045-00	s	METAL, CHIP 680 5% 1/10W	
R237	1-216-077-00	s	METAL, CHIP 15k 5% 1/10W	
R238	1-216-089-91	s	METAL, CHIP 47k 5% 1/10W	
R239	⚠ 1-215-905-11	s	METAL 10 5% 3W	
R240	⚠ 1-215-905-11	s	METAL 10 5% 3W	
R241	1-216-097-91	s	METAL, CHIP 100k 5% 1/10W	
R242	1-216-097-91	s	METAL, CHIP 100k 5% 1/10W	
R243	1-216-089-91	s	METAL, CHIP 47k 5% 1/10W	
R246	1-216-073-00	s	METAL, CHIP 10k 5% 1/10W	
R250	1-216-097-91	s	METAL, CHIP 100k 5% 1/10W	
*R256	1-215-435-00	s	METAL 3.9k 1% 1/6W	*8
	1-216-659-11	s	METAL, CHIP 2.2k 0.5% 1/10W	*9
R301	1-216-121-91	s	METAL, CHIP 1M 5% 1/10W	
R302	1-216-097-91	s	METAL, CHIP 100k 5% 1/10W	
R303	1-216-677-11	s	METAL, CHIP 12k 0.5% 1/10W	
R304	1-216-049-91	s	METAL, CHIP 1k 5% 1/10W	
R305	1-208-803-11	s	METAL, CHIP 7.5k 0.5% 1/10W	
R306	1-216-049-91	s	METAL, CHIP 1k 5% 1/10W	
R307	1-216-089-91	s	METAL, CHIP 47k 5% 1/10W	
R308	1-216-089-91	s	METAL, CHIP 47k 5% 1/10W	
R309	1-216-057-00	s	METAL, CHIP 2.2k 5% 1/10W	
R310	1-216-057-00	s	METAL, CHIP 2.2k 5% 1/10W	
R311	1-216-057-00	s	METAL, CHIP 2.2k 5% 1/10W	
R312	1-216-057-00	s	METAL, CHIP 2.2k 5% 1/10W	
R313	1-216-065-00	s	METAL, CHIP 4.7k 5% 1/10W	
R314	1-216-081-00	s	METAL, CHIP 22k 5% 1/10W	
R315	1-216-689-11	s	METAL, CHIP 39k 0.5% 1/10W	
R316	1-208-806-11	s	METAL, CHIP 10k 0.5% 1/10W	
R317	1-216-673-11	s	METAL, CHIP 8.2k 0.5% 1/10W	
R318	1-216-077-00	s	METAL, CHIP 15k 5% 1/10W	
R319	1-216-077-00	s	METAL, CHIP 15k 5% 1/10W	
R320	1-216-057-00	s	METAL, CHIP 2.2k 5% 1/10W	
R321	1-216-065-00	s	METAL, CHIP 4.7k 5% 1/10W	
R322	1-216-085-00	s	METAL, CHIP 33k 5% 1/10W	
R323	1-216-065-00	s	METAL, CHIP 4.7k 5% 1/10W	
R324	1-216-081-00	s	METAL, CHIP 22k 5% 1/10W	
R325	1-216-689-11	s	METAL, CHIP 39k 0.5% 1/10W	
R326	1-208-806-11	s	METAL, CHIP 10k 0.5% 1/10W	
R327	1-216-673-11	s	METAL, CHIP 8.2k 0.5% 1/10W	
R328	1-216-077-00	s	METAL, CHIP 15k 5% 1/10W	
R329	1-216-077-00	s	METAL, CHIP 15k 5% 1/10W	
R330	1-216-057-00	s	METAL, CHIP 2.2k 5% 1/10W	

(AR-14AP BOARD(for UVW-1400P, PAL))

Ref. No. or Q'ty	Part No.	SP	Description	
R331	1-216-065-00	s	METAL, CHIP 4.7k 5% 1/10W	
R332	1-216-085-00	s	METAL, CHIP 33k 5% 1/10W	
*RV106	1-241-785-11	s	RES, ADJ METAL 10k	*16
	1-241-783-11	s	RES, ADJ METAL 2.2k	*17
RV107	1-241-786-11	s	RES, ADJ METAL 22k	
*RV206	1-241-785-11	s	RES, ADJ METAL 10k	*16
	1-241-783-11	s	RES, ADJ METAL 2.2k	*17
RV207	1-241-786-11	s	RES, ADJ METAL 22k	
RV301	1-241-765-11	s	RES, ADJ METAL 22k	
RV302	1-241-765-11	s	RES, ADJ METAL 22k	
S103	1-570-602-11	s	SWITCH, DIP 2-CKT	
S203	1-570-602-11	s	SWITCH, DIP 2-CKT	
T101	1-423-870-11	s	TRANSFORMER, BIAS OSC	
T201	1-423-870-11	s	TRANSFORMER, BIAS OSC	
*TH1	1-800-199-00	s	THERMISTOR S-1250	*8
	1-807-796-11	s	THERMISTOR 10k	*9
*TH2	1-800-199-00	s	THERMISTOR S-1250	*8
	1-807-796-11	s	THERMISTOR 10k	*9
X301	1-567-861-21	s	CRYSTAL 4.194304MHz	

CL-25 BOARD

Ref. No. or Q'ty	Part No.	SP	Description	

Two CL-25 boards are used in UVW-1400/1400P/1200/1200P.
One board has the following parts.

*1pc	1-640-170-13	o	PRINTED CIRCUIT BOARD, CL-25	*18
1pc	3-171-424-01	o	HOLDER, SENSOR	
C1	1-161-051-00	s	CERAMIC 0.01uF 10% 50V	
CN930	1-564-011-11	o	CONNECTOR 12P, MALE	
CN931	1-564-001-11	o	CONNECTOR 2P, MALE	
CN933	1-573-599-11	s	CONNECTOR 5P, FEMALE	
CN935	1-564-001-11	o	CONNECTOR 2P, MALE	
D1	8-719-938-07	s	LED GL480, INFRARED	
D2	8-719-938-07	s	LED GL480, INFRARED	
Q1	8-729-903-81	s	PHOTOTRANSISTOR PT480	
Q2	8-729-903-81	s	PHOTOTRANSISTOR PT480	
R1	1-247-825-31	s	CARBON 560 5% 1/4W	
R2	1-247-825-31	s	CARBON 560 5% 1/4W	

Note: In this list * marked parts are design changed.
Refer to pages 18-29 to 18-31 for applicable serial numbers.

CL-29 BOARD

Ref. No. or Q'ty	Part No.	SP	Description	
Two CL-29 boards are used in UVW-1400/1400P/1200/1200P. One board has the following parts.				
*1pc	A-8276-626-B	o	MOUNTED CIRCUIT BOARD, CL-29	*19
1pc	3-171-424-02	o	HOLDER, SENSOR	
C1	1-161-051-00	s	CERAMIC 0.01uF 10% 50V	
CN930	1-564-011-11	o	CONNECTOR 12P, MALE	
CN931	1-506-467-11	s	CONNECTOR 2P, MALE	
CN933	1-573-599-11	s	CONNECTOR 5P, FEMALE	
CN935	1-506-467-11	s	CONNECTOR 2P, MALE	
D1	8-719-938-07	s	LED GL480, INFRARED	
D2	8-719-938-07	s	LED GL480, INFRARED	
Q1	8-729-903-81	s	PHOTOTRANSISTOR PT480	
Q2	8-729-903-81	s	PHOTOTRANSISTOR PT480	
R1	1-247-825-31	s	CARBON 560 5% 1/4W	
R2	1-247-825-31	s	CARBON 560 5% 1/4W	

CP-225B BOARD(for UVW-1400/1400P)

Ref. No. or Q'ty	Part No.	SP	Description	
CP-225B board is used for UVW-1400/1400P.				
1pc	A-8276-862-A	o	MOUNTED CIRCUIT BOARD, CP-225B	
C1	1-126-933-11	s	ELECT 100uF 20% 16V	
C2	1-126-933-11	s	ELECT 100uF 20% 16V	
C3	1-126-933-11	s	ELECT 100uF 20% 16V	
C5	1-163-809-11	s	CERAMIC, CHIP 0.047uF 10% 25V	
C6	1-163-809-11	s	CERAMIC, CHIP 0.047uF 10% 25V	
C7	1-163-809-11	s	CERAMIC, CHIP 0.047uF 10% 25V	
CN1	1-573-582-11	s	CONNECTOR, BNC, FEMALE	
CN2	1-573-582-11	s	CONNECTOR, BNC, FEMALE	
CN3	1-573-590-13	s	CONNECTOR, CIRCULAR 4P(S), FEMALE	
CN6	1-573-582-11	s	CONNECTOR, BNC, FEMALE	
CN7	1-573-590-13	s	CONNECTOR, CIRCULAR 4P(S), FEMALE	
CN9	1-766-596-11	s	JACK, PIN 1P	
CN652	1-506-486-11	s	CONNECTOR 7P, MALE	
CN654	1-506-491-11	s	CONNECTOR 12P, MALE	
CN655	1-506-493-11	s	CONNECTOR 14P, MALE	
CN656	1-506-467-11	s	CONNECTOR 2P, MALE	
FL3	1-236-058-11	s	COMPOSITION CIRCUIT BLOCK	
FL4	1-236-058-11	s	COMPOSITION CIRCUIT BLOCK	
FL6	1-236-129-11	s	ENCAPSULATED COMPONENTS, LC	
FL7	1-236-129-11	s	ENCAPSULATED COMPONENTS, LC	
FL8	1-236-129-11	s	ENCAPSULATED COMPONENTS, LC	
FL9	1-236-129-11	s	ENCAPSULATED COMPONENTS, LC	
FL10	1-236-129-11	s	ENCAPSULATED COMPONENTS, LC	
FL12	1-236-129-11	s	ENCAPSULATED COMPONENTS, LC	
JW1-17	1-219-202-11	s	RES 0	
Q1	8-729-117-32	s	TRANSISTOR 2SC4177	
Q2	8-729-117-32	s	TRANSISTOR 2SC4177	
*R1	1-216-009-00	s	METAL, CHIP 22 5% 1/10W	*1
	1-216-025-91	s	METAL, CHIP 100 5% 1/10W	*2
R2	1-216-077-00	s	METAL, CHIP 15k 5% 1/10W	
R3	1-216-624-11	s	METAL, CHIP 75 0.5% 1/10W	
R4	1-216-045-00	s	METAL, CHIP 680 5% 1/10W	
*R5	1-216-009-00	s	METAL, CHIP 22 5% 1/10W	*1
	1-216-025-91	s	METAL, CHIP 100 5% 1/10W	*2
R6	1-216-077-00	s	METAL, CHIP 15k 5% 1/10W	
R7	1-216-624-11	s	METAL, CHIP 75 0.5% 1/10W	
R8	1-216-045-00	s	METAL, CHIP 680 5% 1/10W	
R9	1-216-009-00	s	METAL, CHIP 22 5% 1/10W	
R10	1-216-009-00	s	METAL, CHIP 22 5% 1/10W	
R11-15	1-216-625-11	s	METAL, CHIP 82 0.5% 1/10W	
S1	1-570-157-51	s	SWITCH, SLIDE	
S2	1-570-157-51	s	SWITCH, SLIDE	

Note: In this list * marked parts are design changed.
Refer to pages 18-29 to 18-31 for applicable serial numbers.

CP-225C BOARD(for UVW-1200/1200P)

Ref. No. or Q'ty	Part No.	SP	Description	
CP-225C board is used for UVW-1200/1200P.				
1pc	A-8276-858-A	o	MOUNTED CIRCUIT BOARD, CP-225C	
C1	1-126-933-11	s	ELECT 100uF 20% 16V	
C5	1-163-809-11	s	CERAMIC, CHIP 0.047uF 10% 25V	
C6	1-163-809-11	s	CERAMIC, CHIP 0.047uF 10% 25V	
CN1	1-573-582-11	s	CONNECTOR, BNC, FEMALE	
CN6	1-573-582-11	s	CONNECTOR, BNC, FEMALE	
CN7	1-573-590-13	s	CONNECTOR, CIRCULAR 4P(S), FEMALE	
CN9	1-766-596-11	s	JACK, PIN 1P	
CN652	1-506-486-11	s	CONNECTOR 7P, MALE	
CN655	1-506-493-11	s	CONNECTOR 14P, MALE	
CN656	1-506-467-11	s	CONNECTOR 2P, MALE	
FL6	1-236-129-11	s	ENCAPSULATED COMPONENTS, LC	
FL7	1-236-129-11	s	ENCAPSULATED COMPONENTS, LC	
FL8	1-236-129-11	s	ENCAPSULATED COMPONENTS, LC	
FL9	1-236-129-11	s	ENCAPSULATED COMPONENTS, LC	
FL10	1-236-129-11	s	ENCAPSULATED COMPONENTS, LC	
FL12	1-236-129-11	s	ENCAPSULATED COMPONENTS, LC	
JW2	1-219-202-11	s	RES 0	
JW8	1-219-202-11	s	RES 0	
JW9	1-219-202-11	s	RES 0	
JW13	1-219-202-11	s	RES 0	
JW16	1-219-202-11	s	RES 0	
Q1	8-729-117-32	s	TRANSISTOR 2SC4177	
*R1	1-216-009-00	s	METAL, CHIP 22 5% 1/10W	*1
	1-216-025-91	s	METAL, CHIP 100 5% 1/10W	*2
R2	1-216-077-00	s	METAL, CHIP 15k 5% 1/10W	
R3	1-216-624-11	s	METAL, CHIP 75 0.5% 1/10W	
R4	1-216-045-00	s	METAL, CHIP 680 5% 1/10W	
R9	1-216-009-00	s	METAL, CHIP 22 5% 1/10W	
R17	1-216-295-91	s	RES, CHIP 0	
S1	1-570-157-51	s	SWITCH, SLIDE	

CP-226 BOARD(for UVW-1400(UC)/1400P)

Ref. No. or Q'ty	Part No.	SP	Description
CP-226 board is used for UVW-1400(UC)/1400P.			
1pc	A-8276-739-A	o	MOUNTED CIRCUIT BOARD, CP-226
C1	1-163-809-11	s	CERAMIC, CHIP 0.047uF 10% 25V
C21	1-163-809-11	s	CERAMIC, CHIP 0.047uF 10% 25V
CN101	1-750-786-11	s	CONNECTOR, XLR 3P, FEMALE
CN102	1-750-785-11	s	CONNECTOR, XLR 3P, MALE
CN274	1-506-486-11	s	CONNECTOR 7P, MALE
CN275	1-506-485-11	s	CONNECTOR 6P, MALE
CN276	1-506-467-11	s	CONNECTOR 2P, MALE
R1	1-216-295-91	s	RES, CHIP 0
R2	1-216-295-91	s	RES, CHIP 0
R5	1-216-646-11	s	METAL, CHIP 620 0.5% 1/10W
R6	1-216-295-91	s	RES, CHIP 0
R7	1-216-025-91	s	METAL, CHIP 100 5% 1/10W
R8	1-216-295-91	s	RES, CHIP 0
R11	1-216-295-91	s	RES, CHIP 0
R12	1-216-295-91	s	RES, CHIP 0
R21	1-216-295-91	s	RES, CHIP 0
R22	1-216-295-91	s	RES, CHIP 0
R25	1-216-646-11	s	METAL, CHIP 620 0.5% 1/10W
R27	1-216-025-91	s	METAL, CHIP 100 5% 1/10W
R28	1-216-295-91	s	RES, CHIP 0
R31	1-216-295-91	s	RES, CHIP 0
S1	1-570-157-11	s	SWITCH, SLIDE
S2	1-570-157-11	s	SWITCH, SLIDE
T1	1-427-586-11	s	TRANSFORMER, INPUT/OUTPUT
T2	1-427-586-11	s	TRANSFORMER, INPUT/OUTPUT

Note: In this list * marked parts are design changed.
Refer to pages 18-29 to 18-31 for applicable serial numbers.

CP-226A BOARD(for UVW-1200(UC)/1200P)

Ref. No. or Q'ty	Part No.	SP	Description
CP-226A board is used for UVW-1200(UC)/1200P.			
1pc	A-8276-733-A	o	MOUNTED CIRCUIT BOARD, CP-226A
C1	1-163-809-11	s	CERAMIC, CHIP 0.047uF 10% 25V
C21	1-163-809-11	s	CERAMIC, CHIP 0.047uF 10% 25V
CN102	1-750-785-11	s	CONNECTOR, XLR 3P, MALE
CN274	1-506-486-11	s	CONNECTOR 7P, MALE
CN276	1-506-467-11	s	CONNECTOR 2P, MALE
R7	1-216-025-91	s	METAL, CHIP 100 5% 1/10W
R8	1-216-295-91	s	RES, CHIP 0
R11	1-216-295-91	s	RES, CHIP 0
R12	1-216-295-91	s	RES, CHIP 0
R27	1-216-025-91	s	METAL, CHIP 100 5% 1/10W
R28	1-216-295-91	s	RES, CHIP 0
R31	1-216-295-91	s	RES, CHIP 0
T1	1-427-586-11	s	TRANSFORMER, INPUT/OUTPUT
T2	1-427-586-11	s	TRANSFORMER, INPUT/OUTPUT

CP-226J BOARD(for UVW-1400(J))

Ref. No. or Q'ty	Part No.	SP	Description
CP-226J board is used for UVW-1400(J).			
1pc	A-8276-762-A	o	MOUNTED CIRCUIT BOARD, CP-226J
C1	1-163-809-11	s	CERAMIC, CHIP 0.047uF 10% 25V
C21	1-163-809-11	s	CERAMIC, CHIP 0.047uF 10% 25V
CN101	1-750-785-11	s	CONNECTOR, XLR 3P, MALE
CN102	1-750-786-11	s	CONNECTOR, XLR 3P, FEMALE
CN274	1-506-486-11	s	CONNECTOR 7P, MALE
CN275	1-506-485-11	s	CONNECTOR 6P, MALE
CN276	1-506-467-11	s	CONNECTOR 2P, MALE
R3	1-216-295-91	s	RES, CHIP 0
R4	1-216-295-91	s	RES, CHIP 0
R5	1-216-646-11	s	METAL, CHIP 620 0.5% 1/10W
R6	1-216-295-91	s	RES, CHIP 0
R7	1-216-025-91	s	METAL, CHIP 100 5% 1/10W
R9	1-216-295-91	s	RES, CHIP 0
R10	1-216-295-91	s	RES, CHIP 0
R12	1-216-295-91	s	RES, CHIP 0
R23	1-216-295-91	s	RES, CHIP 0
R24	1-216-295-91	s	RES, CHIP 0
R25	1-216-646-11	s	METAL, CHIP 620 0.5% 1/10W
R27	1-216-025-91	s	METAL, CHIP 100 5% 1/10W
R29	1-216-295-91	s	RES, CHIP 0
R30	1-216-295-91	s	RES, CHIP 0
S1	1-570-157-11	s	SWITCH, SLIDE
S2	1-570-157-11	s	SWITCH, SLIDE
T1	1-427-586-11	s	TRANSFORMER, INPUT/OUTPUT
T2	1-427-586-11	s	TRANSFORMER, INPUT/OUTPUT

Note: In this list * marked parts are design changed.
Refer to pages 18-29 to 18-31 for applicable serial numbers.

CP-226AJ BOARD(for UVW-1200(J))

Ref. No. or Q'ty	Part No.	SP	Description
CP-226AJ board is used for UVW-1200(J).			
1pc	A-8276-763-A	o	MOUNTED CIRCUIT BOARD, CP-226AJ
C1	1-163-809-11	s	CERAMIC, CHIP 0.047uF 10% 25V
C21	1-163-809-11	s	CERAMIC, CHIP 0.047uF 10% 25V
CN102	1-750-786-11	s	CONNECTOR, XLR 3P, FEMALE
CN274	1-506-486-11	s	CONNECTOR 7P, MALE
CN276	1-506-467-11	s	CONNECTOR 2P, MALE
R7	1-216-025-91	s	METAL, CHIP 100 5% 1/10W
R9	1-216-295-91	s	RES, CHIP 0
R10	1-216-295-91	s	RES, CHIP 0
R12	1-216-295-91	s	RES, CHIP 0
R27	1-216-025-91	s	METAL, CHIP 100 5% 1/10W
R29	1-216-295-91	s	RES, CHIP 0
R30	1-216-295-91	s	RES, CHIP 0
T1	1-427-586-11	s	TRANSFORMER, INPUT/OUTPUT
T2	1-427-586-11	s	TRANSFORMER, INPUT/OUTPUT

CP-239 BOARD

Ref. No. or Q'ty	Part No.	SP	Description
1pc	A-8276-865-A	o	MOUNTED CIRCUIT BOARD, CP-239
CN503	1-764-121-31	s	CONNECTOR, D-SUB 25P, FEMALE
CN532	1-563-462-11	o	CONNECTOR, FPC 17P

DR-214 BOARD

Ref. No. or Q'ty	Part No.	SP	Description
1pc	A-8275-290-A	o	MOUNTED CIRCUIT BOARD, DR-214
1pc	3-531-576-21	s	RIVET
1pc	4-812-134-21	s	RIVET (DIA. 3.5), NYLON
6pcs	4-911-232-01	s	SHEET, INSULATING
1pc	3-182-357-01	o	HEAT SINK (L), DR
1pc	3-182-358-01	o	HEAT SINK (R), DR
1pc	3-183-144-01	o	HEAT SINK (D), DR
16pcs	7-682-548-04	s	SCREW, +B3x8
C1	1-126-940-11	s	ELECT 330uF 20% 25V
C2	1-126-940-11	s	ELECT 330uF 20% 25V
C3	1-126-933-11	s	ELECT 100uF 20% 16V
C4	1-126-933-11	s	ELECT 100uF 20% 16V
C5	1-124-589-11	s	ELECT 47uF 20% 16V
C6	1-125-404-00	s	DOUBLE LAYERS 0.47F 5.5V
C7	1-131-347-00	s	TANTALUM 1uF 10% 35V
C8	1-126-940-11	s	ELECT 330uF 20% 25V
C51	1-164-095-11	s	CERAMIC 0.01uF 10% 16V
C52	1-164-095-11	s	CERAMIC 0.01uF 10% 16V
C53	1-164-095-11	s	CERAMIC 0.01uF 10% 16V
C54	1-164-095-11	s	CERAMIC 0.01uF 10% 16V
C55	1-130-489-00	s	MYLAR 0.033uF 5% 50V
C56	1-130-489-00	s	MYLAR 0.033uF 5% 50V
C57	1-130-489-00	s	MYLAR 0.033uF 5% 50V
C58	1-126-096-11	s	ELECT 10uF 20% 35V
C59	1-126-096-11	s	ELECT 10uF 20% 35V
C60	1-126-096-11	s	ELECT 10uF 20% 35V
C61	1-164-097-11	s	CERAMIC 0.022uF 50V
C62	1-164-097-11	s	CERAMIC 0.022uF 50V
C101	1-164-095-11	s	CERAMIC 0.01uF 10% 16V
C102	1-130-489-00	s	MYLAR 0.033uF 5% 50V
C103	1-164-035-11	s	CERAMIC 47pF 5% 50V
C104	1-164-035-11	s	CERAMIC 47pF 5% 50V
C151-155	1-126-096-11	s	ELECT 10uF 20% 35V
C156	1-164-095-11	s	CERAMIC 0.01uF 10% 16V
C201	1-124-248-00	s	ELECT 22uF 20% 35V
C202	1-124-248-00	s	ELECT 22uF 20% 35V
C203	1-124-248-00	s	ELECT 22uF 20% 35V
C204	1-124-248-00	s	ELECT 22uF 20% 35V
C205	1-130-489-00	s	MYLAR 0.033uF 5% 50V
C206	1-130-489-00	s	MYLAR 0.033uF 5% 50V
C207	1-164-035-11	s	CERAMIC 47pF 5% 50V
C208	1-164-035-11	s	CERAMIC 47pF 5% 50V
C209	1-164-035-11	s	CERAMIC 47pF 5% 50V
C210	1-164-097-11	s	CERAMIC 0.022uF 50V
C211	1-164-097-11	s	CERAMIC 0.022uF 50V
C212	1-164-035-11	s	CERAMIC 47pF 5% 50V
C251	1-124-248-00	s	ELECT 22uF 20% 35V
C252	1-124-248-00	s	ELECT 22uF 20% 35V
C253	1-124-248-00	s	ELECT 22uF 20% 35V
C254	1-124-248-00	s	ELECT 22uF 20% 35V
C255	1-130-489-00	s	MYLAR 0.033uF 5% 50V
C256	1-130-489-00	s	MYLAR 0.033uF 5% 50V
C257	1-164-097-11	s	CERAMIC 0.022uF 50V
C258	1-164-097-11	s	CERAMIC 0.022uF 50V
C259	1-164-035-11	s	CERAMIC 47pF 5% 50V
C260	1-164-035-11	s	CERAMIC 47pF 5% 50V
C261	1-164-035-11	s	CERAMIC 47pF 5% 50V
C264	1-164-035-11	s	CERAMIC 47pF 5% 50V

Note: In this list * marked parts are design changed.
Refer to pages 18-29 to 18-31 for applicable serial numbers.

(DR-214 BOARD)

Ref. No. or Q'ty	Part No.	SP	Description
C301	1-124-248-00	s	ELECT 22uF 20% 35V
C303	1-130-491-00	s	MYLAR 0.047uF 5% 50V
C304	1-130-495-00	s	MYLAR 0.1uF 5% 50V
C305	1-126-160-11	s	ELECT 1uF 20% 50V
C306	1-126-096-11	s	ELECT 10uF 20% 35V
C308	1-164-097-11	s	CERAMIC 0.022uF 50V
C309	1-164-097-11	s	CERAMIC 0.022uF 50V
C310	1-161-494-00	s	CERAMIC 0.022uF 25V
C311	1-161-494-00	s	CERAMIC 0.022uF 25V
C313	1-130-491-00	s	MYLAR 0.047uF 5% 50V
C314	1-130-495-00	s	MYLAR 0.1uF 5% 50V
C315	1-130-495-00	s	MYLAR 0.1uF 5% 50V
C316	1-130-491-00	s	MYLAR 0.047uF 5% 50V
C317	1-130-477-00	s	MYLAR 0.0033uF 5% 50V
C318	1-162-290-31	s	CERAMIC 470pF 10% 50V
C319	1-130-477-00	s	MYLAR 0.0033uF 5% 50V
C320	1-126-096-11	s	ELECT 10uF 20% 35V
C321	1-162-290-31	s	CERAMIC 470pF 10% 50V
C322	1-162-282-31	s	CERAMIC 100pF 10% 50V
C323	1-162-282-31	s	CERAMIC 100pF 10% 50V
C324	1-126-096-11	s	ELECT 10uF 20% 35V
C325	1-161-494-00	s	CERAMIC 0.022uF 25V
C326	1-161-494-00	s	CERAMIC 0.022uF 25V
C327	1-161-494-00	s	CERAMIC 0.022uF 25V
C328	1-130-495-00	s	MYLAR 0.1uF 5% 50V
C331	1-130-487-00	s	MYLAR 0.022uF 5% 50V
C332	1-126-096-11	s	ELECT 10uF 20% 35V
C333	1-130-495-00	s	MYLAR 0.1uF 5% 50V
C335	1-130-491-00	s	MYLAR 0.047uF 5% 50V
C337	1-162-288-31	s	CERAMIC 330pF 10% 50V
C339	1-131-388-00	s	TANTALUM 68uF 10% 6.3V
C340	1-131-388-00	s	TANTALUM 68uF 10% 6.3V
C341	1-124-248-00	s	ELECT 22uF 20% 35V
C343	1-124-248-00	s	ELECT 22uF 20% 35V
C345	1-126-947-11	s	ELECT 47uF 20% 35V
C349	1-164-097-11	s	CERAMIC 0.022uF 50V
CN300	1-573-600-21	s	CONNECTOR, PHEC 100P, MALE
CN301	1-563-017-11	o	CONNECTOR, FPC 30P
CN302	1-563-017-11	o	CONNECTOR, FPC 30P
CN303	1-563-017-11	o	CONNECTOR, FPC 30P
D1	8-719-986-73	s	DIODE RB441Q
D151-156	8-719-200-02	s	DIODE 10E2
D301	8-719-911-19	s	DIODE 1SS119
D302	8-719-911-19	s	DIODE 1SS119
D303	8-719-911-19	s	DIODE 1SS119
D304	8-719-911-19	s	DIODE 1SS119
D306	8-719-911-19	s	DIODE 1SS119
IC1	8-759-603-69	s	IC M51957BL
IC51	8-759-106-41	s	IC UPC4570C
IC52	8-759-801-95	s	IC LB1620
IC151	8-759-205-56	s	IC TA7267P
IC152	8-759-205-56	s	IC TA7267P
IC153	8-759-205-56	s	IC TA7267P
IC201	8-759-106-41	s	IC UPC4570C
IC251	8-759-106-41	s	IC UPC4570C
IC301	8-759-106-41	s	IC UPC4570C
IC302	8-759-106-41	s	IC UPC4570C

(DR-214 BOARD)

Ref. No. or Q'ty	Part No.	SP	Description	
IC303	8-759-729-03	s	IC NJM2903D	
IC304	8-759-106-41	s	IC UPC4570C	
IC305	8-759-106-41	s	IC UPC4570C	
IC306	8-759-729-03	s	IC NJM2903D	
IC307	8-759-140-53	s	IC UPD4053BC	
IC308	8-759-800-72	s	IC LA7205	
IC310	8-743-914-00	s	IC BX3914	
IC311	8-759-705-58	s	IC NJM4558D-D	
IC313	8-759-140-53	s	IC UPD4053BC	
L1	1-412-533-21	s	INDUCTOR 47uH	
PS1	⚠ 1-532-679-00	s	LINK, IC 0.6A	
PS2	⚠ 1-532-679-00	s	LINK, IC 0.6A	
Q1	8-729-900-89	s	TRANSISTOR DTC144ES	
Q51	8-729-265-52	s	TRANSISTOR 2SC2655-Y	
Q52	8-729-021-83	s	TRANSISTOR 2SA1020-Y-TPE6	
Q53	8-729-400-12	s	TRANSISTOR 2SB941-P	
Q101	8-729-265-52	s	TRANSISTOR 2SC2655-Y	
Q102	8-729-021-83	s	TRANSISTOR 2SA1020-Y-TPE6	
Q103	8-729-400-12	s	TRANSISTOR 2SB941-P	
Q151	8-729-265-52	s	TRANSISTOR 2SC2655-Y	
Q152	8-729-141-83	s	TRANSISTOR 2SA473-Y	
Q153	8-729-265-52	s	TRANSISTOR 2SC2655-Y	
Q154	8-729-400-12	s	TRANSISTOR 2SB941-P	
Q155	8-729-021-83	s	TRANSISTOR 2SA1020-Y-TPE6	
Q201	8-729-265-52	s	TRANSISTOR 2SC2655-Y	
Q202	8-729-021-83	s	TRANSISTOR 2SA1020-Y-TPE6	
Q203	8-729-102-47	s	TRANSISTOR 2SA1141-Q	
Q204	8-729-102-57	s	TRANSISTOR 2SC3012	
Q205	8-729-102-14	s	TRANSISTOR 2SD1021-F	
Q206	8-729-205-02	s	TRANSISTOR 2SA1150-Y	
Q207	8-729-102-47	s	TRANSISTOR 2SA1141-Q	
Q208	8-729-102-57	s	TRANSISTOR 2SC3012	
Q251	8-729-265-52	s	TRANSISTOR 2SC2655-Y	
Q252	8-729-021-83	s	TRANSISTOR 2SA1020-Y-TPE6	
Q253	8-729-102-47	s	TRANSISTOR 2SA1141-Q	
Q254	8-729-102-57	s	TRANSISTOR 2SC3012	
Q255	8-729-102-14	s	TRANSISTOR 2SD1021-F	
Q256	8-729-205-02	s	TRANSISTOR 2SA1150-Y	
Q257	8-729-102-47	s	TRANSISTOR 2SA1141-Q	
Q258	8-729-102-57	s	TRANSISTOR 2SC3012	
Q301	8-729-900-89	s	TRANSISTOR DTC144ES	
Q302	8-729-900-89	s	TRANSISTOR DTC144ES	
Q303	8-729-119-76	s	TRANSISTOR 2SA1115P	
R1	⚠ 1-215-860-11	s	METAL 33 5% 1W	
R2	1-215-461-00	s	METAL 47k 1% 1/6W	
R3	1-215-457-00	s	METAL 33k 1% 1/6W	
R4	1-249-437-11	s	CARBON 47k 5% 1/4W	
*R51	1-249-429-11	s	CARBON 10k 5% 1/4W	*36
	1-215-445-00	s	METAL 10k 1% 1/6W	*37
*R52	1-249-429-11	s	CARBON 10k 5% 1/4W	*36
	1-215-445-00	s	METAL 10k 1% 1/6W	*37
R53	⚠ 1-216-389-11	s	METAL 1 5% 3W	
*R54	1-249-437-11	s	CARBON 47k 5% 1/4W	*36
	1-215-461-00	s	METAL 47k 1% 1/6W	*37
*R55	1-249-437-11	s	CARBON 47k 5% 1/4W	*36
	1-215-461-00	s	METAL 47k 1% 1/6W	*37

Note: In this list * marked parts are design changed.
Refer to pages 18-29 to 18-31 for applicable serial numbers.

(DR-214 BOARD)

Ref. No. or Q'ty	Part No.	SP	Description	
R56	1-249-393-11	s	CARBON 10 5% 1/4W	
R57	1-249-393-11	s	CARBON 10 5% 1/4W	
R58	1-249-393-11	s	CARBON 10 5% 1/4W	
R59	1-249-408-11	s	CARBON 180 5% 1/4W	
R60	1-249-406-11	s	CARBON 120 5% 1/4W	
R101	1-247-887-00	s	CARBON 220k 5% 1/4W	
R102	⚠ 1-215-863-11	s	METAL 100 5% 1W	
R103	⚠ 1-215-863-11	s	METAL 100 5% 1W	
R104	⚠ 1-216-383-11	s	METAL 0.33 5% 3W	
R105	⚠ 1-216-365-00	s	METAL 0.47 5% 2W	
*R106	1-249-429-11	s	CARBON 10k 5% 1/4W	*36
	1-215-445-00	s	METAL 10k 1% 1/6W	*37
*R107	1-249-429-11	s	CARBON 10k 5% 1/4W	*36
	1-215-445-00	s	METAL 10k 1% 1/6W	*37
*R108	1-249-437-11	s	CARBON 47k 5% 1/4W	*36
	1-215-461-00	s	METAL 47k 1% 1/6W	*37
*R109	1-249-437-11	s	CARBON 47k 5% 1/4W	*36
	1-215-461-00	s	METAL 47k 1% 1/6W	*37
R151	1-249-429-11	s	CARBON 10k 5% 1/4W	
R152	1-249-429-11	s	CARBON 10k 5% 1/4W	
R153	1-249-429-11	s	CARBON 10k 5% 1/4W	
R154	⚠ 1-215-866-11	s	METAL 330 5% 1W	
R155-160	1-249-429-11	s	CARBON 10k 5% 1/4W	
R161	1-247-887-00	s	CARBON 220k 5% 1/4W	
R162	⚠ 1-215-863-11	s	METAL 100 5% 1W	
R163	⚠ 1-215-867-00	s	METAL 470 5% 1W	
R164	⚠ 1-215-868-00	s	METAL 680 5% 1W	
R165	⚠ 1-216-383-11	s	METAL 0.33 5% 3W	
R166	⚠ 1-216-383-11	s	METAL 0.33 5% 3W	
R167	⚠ 1-216-383-11	s	METAL 0.33 5% 3W	
R168	⚠ 1-216-385-11	s	METAL 0.47 5% 3W	
R201	1-249-429-11	s	CARBON 10k 5% 1/4W	
R202	1-249-417-11	s	CARBON 1k 5% 1/4W	
R203	1-249-417-11	s	CARBON 1k 5% 1/4W	
R204	1-249-429-11	s	CARBON 10k 5% 1/4W	
R205	1-249-417-11	s	CARBON 1k 5% 1/4W	
R206	⚠ 1-215-863-11	s	METAL 100 5% 1W	
R207	⚠ 1-215-889-00	s	METAL 330 5% 2W	
R208	⚠ 1-215-889-00	s	METAL 330 5% 2W	
R209	⚠ 1-215-863-11	s	METAL 100 5% 1W	
R210	1-249-417-11	s	CARBON 1k 5% 1/4W	
R211	1-249-417-11	s	CARBON 1k 5% 1/4W	
R212	⚠ 1-216-365-00	s	METAL 0.47 5% 2W	
*R213	1-249-429-11	s	CARBON 10k 5% 1/4W	*36
	1-215-445-00	s	METAL 10k 1% 1/6W	*37
*R214	1-249-437-11	s	CARBON 47k 5% 1/4W	*36
	1-215-461-00	s	METAL 47k 1% 1/6W	*37
*R215	1-249-429-11	s	CARBON 10k 5% 1/4W	*36
	1-215-445-00	s	METAL 10k 1% 1/6W	*37
*R216	1-249-429-11	s	CARBON 10k 5% 1/4W	*36
	1-215-445-00	s	METAL 10k 1% 1/6W	*37
*R217	1-249-437-11	s	CARBON 47k 5% 1/4W	*36
	1-215-461-00	s	METAL 47k 1% 1/6W	*37

(DR-214 BOARD)

Ref. No. or Q'ty	Part No.	SP	Description	
*R218	1-249-437-11	s	CARBON 47k 5% 1/4W	*36
	1-215-461-00	s	METAL 47k 1% 1/6W	*37
*R219	1-249-429-11	s	CARBON 10k 5% 1/4W	*36
	1-215-445-00	s	METAL 10k 1% 1/6W	*37
*R220	1-249-437-11	s	CARBON 47k 5% 1/4W	*36
	1-215-461-00	s	METAL 47k 1% 1/6W	*37
R221	⚠ 1-216-365-00	s	METAL 0.47 5% 2W	
R251	1-249-429-11	s	CARBON 10k 5% 1/4W	
R252	1-249-417-11	s	CARBON 1k 5% 1/4W	
R253	1-249-417-11	s	CARBON 1k 5% 1/4W	
R254	1-249-429-11	s	CARBON 10k 5% 1/4W	
R255	1-249-417-11	s	CARBON 1k 5% 1/4W	
R256	⚠ 1-215-863-11	s	METAL 100 5% 1W	
R257	⚠ 1-215-889-00	s	METAL 330 5% 2W	
R258	⚠ 1-215-889-00	s	METAL 330 5% 2W	
R259	⚠ 1-215-863-11	s	METAL 100 5% 1W	
R260	1-249-417-11	s	CARBON 1k 5% 1/4W	
R261	1-249-417-11	s	CARBON 1k 5% 1/4W	
*R262	1-249-437-11	s	CARBON 47k 5% 1/4W	*36
	1-215-461-00	s	METAL 47k 1% 1/6W	*37
R263	⚠ 1-216-365-00	s	METAL 0.47 5% 2W	
*R264	1-249-429-11	s	CARBON 10k 5% 1/4W	*36
	1-215-445-00	s	METAL 10k 1% 1/6W	*37
*R265	1-249-429-11	s	CARBON 10k 5% 1/4W	*36
	1-215-445-00	s	METAL 10k 1% 1/6W	*37
*R266	1-249-429-11	s	CARBON 10k 5% 1/4W	*36
	1-215-445-00	s	METAL 10k 1% 1/6W	*37
*R267	1-249-437-11	s	CARBON 47k 5% 1/4W	*36
	1-215-461-00	s	METAL 47k 1% 1/6W	*37
*R268	1-249-437-11	s	CARBON 47k 5% 1/4W	*36
	1-215-461-00	s	METAL 47k 1% 1/6W	*37
*R269	1-249-429-11	s	CARBON 10k 5% 1/4W	*36
	1-215-445-00	s	METAL 10k 1% 1/6W	*37
R270	⚠ 1-216-365-00	s	METAL 0.47 5% 2W	
*R271	1-249-437-11	s	CARBON 47k 5% 1/4W	*36
	1-215-461-00	s	METAL 47k 1% 1/6W	*37
R301	1-249-417-11	s	CARBON 1k 5% 1/4W	
R302	1-249-417-11	s	CARBON 1k 5% 1/4W	
R303	1-249-417-11	s	CARBON 1k 5% 1/4W	
R304	1-249-417-11	s	CARBON 1k 5% 1/4W	
R305	1-247-863-91	s	CARBON 22k 5% 1/4W	
R306	1-247-863-91	s	CARBON 22k 5% 1/4W	
*R307	1-247-885-00	s	CARBON 180k 5% 1/4W	*36
	1-249-441-11	s	CARBON 100k 5% 1/4W	*37
R308	1-249-426-11	s	CARBON 5.6k 5% 1/4W	
R309	1-249-429-11	s	CARBON 10k 5% 1/4W	
R310	1-249-429-11	s	CARBON 10k 5% 1/4W	
R311	1-249-441-11	s	CARBON 100k 5% 1/4W	
R312	1-249-441-11	s	CARBON 100k 5% 1/4W	
R313	1-249-429-11	s	CARBON 10k 5% 1/4W	
R314	1-247-863-91	s	CARBON 22k 5% 1/4W	
R315	1-249-417-11	s	CARBON 1k 5% 1/4W	
R316	1-247-895-91	s	CARBON 470k 5% 1/4W	
R317	1-249-421-11	s	CARBON 2.2k 5% 1/4W	

Note: In this list * marked parts are design changed.
Refer to pages 18-29 to 18-31 for applicable serial numbers.

(DR-214 BOARD)

Ref. No. or Q'ty	Part No.	SP	Description
R318	1-249-421-11	s	CARBON 2.2k 5% 1/4W
R319	1-215-429-00	s	METAL 2.2k 1% 1/6W
R320	1-215-429-00	s	METAL 2.2k 1% 1/6W
R321	1-215-461-00	s	METAL 47k 1% 1/6W
R322	1-215-461-00	s	METAL 47k 1% 1/6W
R323	1-249-426-11	s	CARBON 5.6k 5% 1/4W
R324	1-249-426-11	s	CARBON 5.6k 5% 1/4W
R325	1-215-481-00	s	METAL 330k 1% 1/6W
R326	1-249-441-11	s	CARBON 100k 5% 1/4W
R327	1-249-435-11	s	CARBON 33k 5% 1/4W
R328	1-249-441-11	s	CARBON 100k 5% 1/4W
R329	1-249-429-11	s	CARBON 10k 5% 1/4W
R330	1-249-441-11	s	CARBON 100k 5% 1/4W
R331	1-249-435-11	s	CARBON 33k 5% 1/4W
R332	1-249-429-11	s	CARBON 10k 5% 1/4W
R333	1-249-441-11	s	CARBON 100k 5% 1/4W
R334	1-215-481-00	s	METAL 330k 1% 1/6W
R335	1-247-903-00	s	CARBON 1M 5% 1/4W
R336	1-247-903-00	s	CARBON 1M 5% 1/4W
R337	1-249-429-11	s	CARBON 10k 5% 1/4W
R338	1-249-429-11	s	CARBON 10k 5% 1/4W
R339	1-249-437-11	s	CARBON 47k 5% 1/4W
R340	1-249-425-11	s	CARBON 4.7k 5% 1/4W
R341	1-215-419-00	s	METAL 820 1% 1/6W
R342	1-249-425-11	s	CARBON 4.7k 5% 1/4W
R343	1-249-437-11	s	CARBON 47k 5% 1/4W
R344	1-215-461-00	s	METAL 47k 1% 1/6W
R345	1-215-461-00	s	METAL 47k 1% 1/6W
R346	1-249-418-11	s	CARBON 1.2k 5% 1/4W
R347	1-249-437-11	s	CARBON 47k 5% 1/4W
R349	1-249-429-11	s	CARBON 10k 5% 1/4W
R350	1-249-427-11	s	CARBON 6.8k 5% 1/4W
R351	1-259-882-11	s	CARBON 3.3M 5% 1/4W
R352	1-249-429-11	s	CARBON 10k 5% 1/4W
R353	1-249-429-11	s	CARBON 10k 5% 1/4W
R354	1-249-429-11	s	CARBON 10k 5% 1/4W
R356	1-249-427-11	s	CARBON 6.8k 5% 1/4W
R357	1-249-425-11	s	CARBON 4.7k 5% 1/4W
R358 ⚠	1-215-886-11	s	METAL 100 5% 2W

HP-61 BOARD

Ref. No. or Q'ty	Part No.	SP	Description	
*1pc	1-648-917-11	o	PRINTED CIRCUIT BOARD, HP-61	*8
	1-648-917-12	o	PRINTED CIRCUIT BOARD, HP-61	*9
CN401	1-506-475-11	s	CONNECTOR 10P, MALE	
CN403	1-506-468-11	s	CONNECTOR 3P, MALE	
*J1	1-507-863-51	s	JACK, PHONE	*8
	1-565-327-11	s	JACK, PHONE STEREO	*9
J2	1-507-743-21	s	JACK, MINI STEREO	
JW1	1-219-202-11	s	RES 0	
JW2	1-219-202-11	s	RES 0	
RV1	1-241-577-11	s	RES, VAR CARBON 20k/20k	

Note: In this list * marked parts are design changed.
Refer to pages 18-29 to 18-31 for applicable serial numbers.

KY-290 BOARD(for UVW-1400/1400P)

Ref. No.
or Q'ty Part No. SP Description

KY-290 board is used for UVW-1400/1400P.

1pc	A-8275-577-A	o	MOUNTED CIRCUIT BOARD, KY-290
1pc	3-182-359-02	o	HOLDER, VFD
C1	1-163-033-91	s	CERAMIC, CHIP 0.022uF 50V
C6	1-163-251-11	s	CERAMIC, CHIP 100pF 5% 50V
C7	1-163-251-11	s	CERAMIC, CHIP 100pF 5% 50V
C8	1-163-033-91	s	CERAMIC, CHIP 0.022uF 50V
C14	1-126-400-11	s	ELECT, CHIP 22uF 20% 35V
C15	1-126-400-11	s	ELECT, CHIP 22uF 20% 35V
C16-20	1-163-033-91	s	CERAMIC, CHIP 0.022uF 50V
C21	1-163-251-11	s	CERAMIC, CHIP 100pF 5% 50V
C22	1-163-033-91	s	CERAMIC, CHIP 0.022uF 50V
C31	1-163-133-00	s	CERAMIC, CHIP 470pF 5% 50V
C32	1-163-133-00	s	CERAMIC, CHIP 470pF 5% 50V
CN590	1-506-494-11	s	CONNECTOR 15P, MALE
CN591	1-563-003-21	o	CONNECTOR, FPC 20P
CN592	1-564-014-11	s	CONNECTOR 4P, MALE
CN593	1-563-003-21	o	CONNECTOR, FPC 20P
D1	8-719-123-85	s	DIODE 1SS304
D2-12	8-719-123-82	s	DIODE 1SS303-T1
IC1	8-759-505-99	s	IC MSC7128-04GS-V1K
IC3	8-759-194-79	s	IC UPD75028GC-542-AB8
IC6	8-759-925-74	s	IC TC74HC04ANS
ND1	1-517-246-11	s	UNIT, FLD
Q1-8	8-729-924-19	s	TRANSISTOR DTA123JU
Q9-33	8-729-905-12	s	TRANSISTOR DTA144EU
Q34	8-729-924-19	s	TRANSISTOR DTA123JU
Q35	8-729-924-19	s	TRANSISTOR DTA123JU
Q36-41	8-729-905-12	s	TRANSISTOR DTA144EU
Q42	8-729-924-19	s	TRANSISTOR DTA123JU
R3	1-216-089-91	s	METAL, CHIP 47k 5% 1/10W
R4	1-216-081-00	s	METAL, CHIP 22k 5% 1/10W
R5	1-216-089-91	s	METAL, CHIP 47k 5% 1/10W
R6	1-216-089-91	s	METAL, CHIP 47k 5% 1/10W
R7	1-216-073-00	s	METAL, CHIP 10k 5% 1/10W
R8	1-216-073-00	s	METAL, CHIP 10k 5% 1/10W
R10-19	1-216-073-00	s	METAL, CHIP 10k 5% 1/10W
R22	1-216-027-00	s	METAL, CHIP 120 5% 1/10W
R23	1-216-027-00	s	METAL, CHIP 120 5% 1/10W
R25	1-216-027-00	s	METAL, CHIP 120 5% 1/10W
R26	1-216-027-00	s	METAL, CHIP 120 5% 1/10W
R27	1-216-027-00	s	METAL, CHIP 120 5% 1/10W
R28	1-216-027-00	s	METAL, CHIP 120 5% 1/10W
R29-63	1-216-103-00	s	METAL, CHIP 180k 5% 1/10W
*R76	1-216-691-11	s	METAL, CHIP 47k 0.5% 1/10W *20
	1-216-687-11	s	METAL, CHIP 33k 0.5% 1/10W *21
R77-82	1-216-083-00	s	METAL, CHIP 27k 5% 1/10W
R83	1-216-103-00	s	METAL, CHIP 180k 5% 1/10W
R91	1-216-049-91	s	METAL, CHIP 1k 5% 1/10W
R92	1-216-049-91	s	METAL, CHIP 1k 5% 1/10W
S1	1-692-892-11	s	SWITCH, PUSH
S2	1-692-892-21	s	SWITCH, PUSH
S3	1-692-890-41	s	SWITCH, PUSH
S4	1-692-890-31	s	SWITCH, PUSH

(KY-290 BOARD(for UVW-1400/1400P))

Ref. No.
or Q'ty Part No. SP Description

S5	1-692-890-21	s	SWITCH, PUSH
S7	1-692-891-21	s	SWITCH, PUSH
S8-15	1-571-787-31	s	SWITCH, PUSH
S16	1-572-992-11	s	SWITCH, SLIDE
S17	1-572-992-11	s	SWITCH, SLIDE
S18	1-571-787-31	s	SWITCH, PUSH
S20	1-571-640-21	s	SWITCH, SLIDE
S21	1-571-640-21	s	SWITCH, SLIDE
S22	1-571-640-21	s	SWITCH, SLIDE
S23	1-571-640-21	s	SWITCH, SLIDE
X1	1-577-101-11	s	RESONATOR, CERAMIC 4.19MHz

Note: In this list * marked parts are design changed.
Refer to pages 18-29 to 18-31 for applicable serial numbers.

KY-290A BOARD(for UVW-1200/1200P)

Ref. No.
or Q'ty Part No. SP Description

KY-290A board is used for UVW-1200/1200P.

1pc A-8275-569-A o MOUNTED CIRCUIT BOARD, KY-290A
1pc 3-182-359-02 o HOLDER, VFD

C1 1-163-033-91 s CERAMIC, CHIP 0.022uF 50V
C6 1-163-251-11 s CERAMIC, CHIP 100pF 5% 50V
C7 1-163-251-11 s CERAMIC, CHIP 100pF 5% 50V
C8 1-163-033-91 s CERAMIC, CHIP 0.022uF 50V
C14 1-126-400-11 s ELECT, CHIP 22uF 20% 35V

C15 1-126-400-11 s ELECT, CHIP 22uF 20% 35V
C16-20 1-163-033-91 s CERAMIC, CHIP 0.022uF 50V
C21 1-163-251-11 s CERAMIC, CHIP 100pF 5% 50V
C22 1-163-033-91 s CERAMIC, CHIP 0.022uF 50V
C31 1-163-133-00 s CERAMIC, CHIP 470pF 5% 50V

C32 1-163-133-00 s CERAMIC, CHIP 470pF 5% 50V

CN590 1-506-494-11 s CONNECTOR 15P, MALE
CN591 1-563-003-21 o CONNECTOR, FPC 20P

D1 8-719-123-85 s DIODE 1SS304
D2-12 8-719-123-82 s DIODE 1SS303-T1

IC1 8-759-505-99 s IC MSC7128-04GS-V1K
IC3 8-759-194-79 s IC UPD75028GC-542-AB8
IC6 8-759-925-74 s IC TC74HC04ANS

ND1 1-517-246-11 s UNIT, FLD

Q1-8 8-729-924-19 s TRANSISTOR DTA123JU
Q36-40 8-729-905-12 s TRANSISTOR DTA144EU
Q42 8-729-924-19 s TRANSISTOR DTA123JU

R3 1-216-089-91 s METAL, CHIP 47k 5% 1/10W
R4 1-216-081-00 s METAL, CHIP 22k 5% 1/10W
R5 1-216-089-91 s METAL, CHIP 47k 5% 1/10W
R6 1-216-089-91 s METAL, CHIP 47k 5% 1/10W
R7 1-216-073-00 s METAL, CHIP 10k 5% 1/10W

R10-19 1-216-073-00 s METAL, CHIP 10k 5% 1/10W
R22 1-216-027-00 s METAL, CHIP 120 5% 1/10W
R23 1-216-027-00 s METAL, CHIP 120 5% 1/10W
R25 1-216-027-00 s METAL, CHIP 120 5% 1/10W
R26 1-216-027-00 s METAL, CHIP 120 5% 1/10W

R27 1-216-027-00 s METAL, CHIP 120 5% 1/10W
R29-36 1-216-103-00 s METAL, CHIP 180k 5% 1/10W
R77-81 1-216-083-00 s METAL, CHIP 27k 5% 1/10W
R83 1-216-103-00 s METAL, CHIP 180k 5% 1/10W
R91 1-216-049-91 s METAL, CHIP 1k 5% 1/10W

R92 1-216-049-91 s METAL, CHIP 1k 5% 1/10W

S1 1-692-892-11 s SWITCH, PUSH
S2 1-692-892-21 s SWITCH, PUSH
S3 1-692-890-41 s SWITCH, PUSH
S4 1-692-890-31 s SWITCH, PUSH
S5 1-692-890-21 s SWITCH, PUSH

S8-13 1-571-787-31 s SWITCH, PUSH
S15 1-571-787-31 s SWITCH, PUSH
S16 1-572-992-11 s SWITCH, SLIDE
S18 1-571-787-31 s SWITCH, PUSH
S20 1-571-640-21 s SWITCH, SLIDE

S21 1-571-640-21 s SWITCH, SLIDE
S23 1-571-640-21 s SWITCH, SLIDE

(KY-290A BOARD(for UVW-1200/1200P))

Ref. No.
or Q'ty Part No. SP Description

X1 1-577-101-11 s RESONATOR, CERAMIC 4.19MHz

MB-471B BOARD(for UVW-1400/1400P)

Ref. No.
or Q'ty Part No. SP Description

MB-471B board is used for UVW-1400/1400P.

1pc A-8276-864-A o MOUNTED CIRCUIT BOARD, MB-471B

CN110 1-573-598-11 s CONNECTOR, PHEC 100P, FEMALE
CN111 1-573-598-11 s CONNECTOR, PHEC 100P, FEMALE
CN112 1-573-598-11 s CONNECTOR, PHEC 100P, FEMALE
CN251 1-564-524-11 s CONNECTOR 9P, MALE
CN261 1-506-491-11 s CONNECTOR 12P, MALE

CN263 1-506-481-11 s CONNECTOR 2P, MALE
CN265 1-564-013-11 o CONNECTOR 3P, MALE
CN274 1-506-486-11 s CONNECTOR 7P, MALE
CN275 1-506-485-11 s CONNECTOR 6P, MALE
CN276 1-506-485-11 s CONNECTOR 6P, MALE

CN277 1-564-014-11 s CONNECTOR 4P, MALE
CN278 1-506-489-11 o CONNECTOR 10P, MALE
CN281 1-563-018-11 o CONNECTOR, FPC 34P

Note: In this list * marked parts are design changed.
Refer to pages 18-29 to 18-31 for applicable serial numbers.

MB-520 BOARD(for UVW-1400, NTSC)

Ref. No. or Q'ty	Part No.	SP	Description	
MB-520 board is used for UVW-1400.				
1pc	A-8276-861-A	o	MOUNTED CIRCUIT BOARD, MB-520	
1pc	3-683-631-01	o	CLAMP	
1pc	9-911-841-XX	s	CUSHION (B)	
CN101	1-573-784-91	o	CONNECTOR, DIN 60P, FEMALE	
CN102	1-573-784-91	o	CONNECTOR, DIN 60P, FEMALE	
CN103	1-573-784-91	o	CONNECTOR, DIN 60P, FEMALE	
CN104	1-573-784-91	o	CONNECTOR, DIN 60P, FEMALE	
CN105	1-573-784-91	o	CONNECTOR, DIN 60P, FEMALE	
CN106	1-573-784-91	o	CONNECTOR, DIN 60P, FEMALE	
CN107	1-573-784-91	o	CONNECTOR, DIN 60P, FEMALE	
CN108	1-573-784-91	o	CONNECTOR, DIN 60P, FEMALE	
CN109	1-573-784-91	o	CONNECTOR, DIN 60P, FEMALE	
CN200	1-564-905-11	o	CONNECTOR, VH 9P, MALE	
CN201	1-564-512-11	o	CONNECTOR 9P, MALE	
CN211	1-506-491-11	s	CONNECTOR 12P, MALE	
CN214	1-580-195-21	s	CONNECTOR, PHEC 100P, FEMALE	
CN231	1-563-018-11	o	CONNECTOR, FPC 34P	
CN232	1-563-462-11	o	CONNECTOR, FPC 17P	
CN235	1-506-482-11	s	CONNECTOR 3P, MALE	
CN262	1-506-494-11	s	CONNECTOR 15P, MALE	
*CN266	1-506-469-11	s	CONNECTOR 4P, MALE	*7
CN267	1-506-472-11	s	CONNECTOR 7P, MALE	
CN268	1-506-479-11	s	CONNECTOR 14P, MALE	
CN271	1-564-011-11	o	CONNECTOR 12P, MALE	
F1	⚠ 1-532-777-21	s	FUSE 1.25A 125V	
F2	⚠ 1-532-777-21	s	FUSE 1.25A 125V	
F3	⚠ 1-532-777-21	s	FUSE 1.25A 125V	

MB-520A BOARD(for UVW-1200, NTSC)

Ref. No. or Q'ty	Part No.	SP	Description	
MB-520A board is used for UVW-1200.				
1pc	A-8276-857-A	o	MOUNTED CIRCUIT BOARD, MB-520A	
1pc	3-683-631-01	o	CLAMP	
1pc	9-911-841-XX	s	CUSHION (B)	
CN103	1-573-784-91	o	CONNECTOR, DIN 60P, FEMALE	
CN104	1-573-784-91	o	CONNECTOR, DIN 60P, FEMALE	
CN105	1-573-784-91	o	CONNECTOR, DIN 60P, FEMALE	
CN106	1-573-784-91	o	CONNECTOR, DIN 60P, FEMALE	
CN107	1-573-784-91	o	CONNECTOR, DIN 60P, FEMALE	
CN108	1-573-784-91	o	CONNECTOR, DIN 60P, FEMALE	
CN109	1-573-784-91	o	CONNECTOR, DIN 60P, FEMALE	
CN200	1-564-905-11	o	CONNECTOR, VH 9P, MALE	
CN201	1-564-512-11	o	CONNECTOR 9P, MALE	
CN211	1-506-491-11	s	CONNECTOR 12P, MALE	
CN214	1-580-195-21	s	CONNECTOR, PHEC 100P, FEMALE	
CN232	1-563-462-11	o	CONNECTOR, FPC 17P	
CN233	1-506-489-11	s	CONNECTOR 10P, MALE	
CN234	1-506-481-11	s	CONNECTOR 2P, MALE	
CN235	1-506-482-11	s	CONNECTOR 3P, MALE	
CN262	1-506-494-11	s	CONNECTOR 15P, MALE	
*CN266	1-506-469-11	s	CONNECTOR 4P, MALE	*7
CN267	1-506-472-11	s	CONNECTOR 7P, MALE	
CN268	1-506-479-11	s	CONNECTOR 14P, MALE	
F1	⚠ 1-532-777-21	s	FUSE 1.25A 125V	
F2	⚠ 1-532-777-21	s	FUSE 1.25A 125V	
F3	⚠ 1-532-777-21	s	FUSE 1.25A 125V	

Note: In this list * marked parts are design changed.
Refer to pages 18-29 to 18-31 for applicable serial numbers.

MB-520AP BOARD(for UVW-1200P, PAL)

Ref. No. or Q'ty	Part No.	SP	Description	
MB-520AP board is used for UVW-1200P.				
1pc	A-8276-880-A	o	MOUNTED CIRCUIT BOARD, MB-520AP	
1pc	3-683-631-01	o	CLAMP	
1pc	9-911-841-XX	s	CUSHION (B)	
CN103	1-573-784-91	o	CONNECTOR, DIN 60P, FEMALE	
CN104	1-573-784-91	o	CONNECTOR, DIN 60P, FEMALE	
CN105	1-573-784-91	o	CONNECTOR, DIN 60P, FEMALE	
CN106	1-573-784-91	o	CONNECTOR, DIN 60P, FEMALE	
CN107	1-573-784-91	o	CONNECTOR, DIN 60P, FEMALE	
CN108	1-573-784-91	o	CONNECTOR, DIN 60P, FEMALE	
CN109	1-573-784-91	o	CONNECTOR, DIN 60P, FEMALE	
CN200	1-564-905-11	o	CONNECTOR, VH 9P, MALE	
CN201	1-564-512-11	o	CONNECTOR 9P, MALE	
CN211	1-506-491-11	s	CONNECTOR 12P, MALE	
CN214	1-580-195-21	s	CONNECTOR, PHEC 100P, FEMALE	
CN232	1-563-462-11	o	CONNECTOR, FPC 17P	
CN233	1-506-489-11	s	CONNECTOR 10P, MALE	
CN234	1-506-481-11	s	CONNECTOR 2P, MALE	
CN235	1-506-482-11	s	CONNECTOR 3P, MALE	
CN262	1-506-494-11	s	CONNECTOR 15P, MALE	
*CN266	1-506-469-11	s	CONNECTOR 4P, MALE	*7
CN267	1-506-472-11	s	CONNECTOR 7P, MALE	
CN268	1-506-479-11	s	CONNECTOR 14P, MALE	
PS1	⚠ 1-532-840-21	s	LINK, IC 1.25A	
PS2	⚠ 1-532-840-21	s	LINK, IC 1.25A	
PS3	⚠ 1-532-840-21	s	LINK, IC 1.25A	

MB-520P BOARD(for UVW-1400P, PAL)

Ref. No. or Q'ty	Part No.	SP	Description	
MB-520P board is used for UVW-1400P.				
1pc	A-8276-879-A	o	MOUNTED CIRCUIT BOARD, MB-520P	
1pc	3-683-631-01	o	CLAMP	
1pc	9-911-841-XX	s	CUSHION (B)	
CN101	1-573-784-91	o	CONNECTOR, DIN 60P, FEMALE	
CN102	1-573-784-91	o	CONNECTOR, DIN 60P, FEMALE	
CN103	1-573-784-91	o	CONNECTOR, DIN 60P, FEMALE	
CN104	1-573-784-91	o	CONNECTOR, DIN 60P, FEMALE	
CN105	1-573-784-91	o	CONNECTOR, DIN 60P, FEMALE	
CN106	1-573-784-91	o	CONNECTOR, DIN 60P, FEMALE	
CN107	1-573-784-91	o	CONNECTOR, DIN 60P, FEMALE	
CN108	1-573-784-91	o	CONNECTOR, DIN 60P, FEMALE	
CN109	1-573-784-91	o	CONNECTOR, DIN 60P, FEMALE	
CN200	1-564-905-11	o	CONNECTOR, VH 9P, MALE	
CN201	1-564-512-11	o	CONNECTOR 9P, MALE	
CN211	1-506-491-11	s	CONNECTOR 12P, MALE	
CN214	1-580-195-21	s	CONNECTOR, PHEC 100P, FEMALE	
CN231	1-563-018-11	o	CONNECTOR, FPC 34P	
CN232	1-563-462-11	o	CONNECTOR, FPC 17P	
CN235	1-506-482-11	s	CONNECTOR 3P, MALE	
CN262	1-506-494-11	s	CONNECTOR 15P, MALE	
*CN266	1-506-469-11	s	CONNECTOR 4P, MALE	*7
CN267	1-506-472-11	s	CONNECTOR 7P, MALE	
CN268	1-506-479-11	s	CONNECTOR 14P, MALE	
CN271	1-564-011-11	o	CONNECTOR 12P, MALE	
PS1	⚠ 1-532-840-21	s	LINK, IC 1.25A	
PS2	⚠ 1-532-840-21	s	LINK, IC 1.25A	
PS3	⚠ 1-532-840-21	s	LINK, IC 1.25A	

Note: In this list * marked parts are design changed.
Refer to pages 18-29 to 18-31 for applicable serial numbers.

MS-39 BOARD(for UVW-1400/1400P)

Ref. No. or Q'ty	Part No.	SP	Description	
MS-39 board is used for UVW-1400/1400P.				
1pc	A-8275-291-A	o	MOUNTED CIRCUIT BOARD, MS-39	
1pc	3-182-355-02	o	COVER, MC SENSOR	
2pcs	3-180-854-03	o	COVER, MR SENSOR	
C3	1-164-097-11	s	CERAMIC 0.022uF 50V	
C5	1-126-933-11	s	ELECT 100uF 20% 16V	
C6	1-164-097-11	s	CERAMIC 0.022uF 50V	
C11	1-126-947-11	s	ELECT 47uF 20% 35V	
C12	1-126-947-11	s	ELECT 47uF 20% 35V	
C13	1-164-097-11	s	CERAMIC 0.022uF 50V	
C14	1-130-728-00	s	FILM 0.0022uF 1% 100V	
C15	1-130-728-00	s	FILM 0.0022uF 1% 100V	
C16	1-164-097-11	s	CERAMIC 0.022uF 50V	
*C17	1-130-495-00	s	MYLAR 0.1uF 5% 50V	*9
CN350	1-564-011-11	o	CONNECTOR 12P, MALE	
CN351	1-506-469-11	s	CONNECTOR 4P, MALE	
CN352	1-506-467-11	s	CONNECTOR 2P, MALE	
CN353	1-506-472-11	s	CONNECTOR 7P, MALE	
CN354	1-506-480-11	s	CONNECTOR 15P, MALE	
CN355	1-506-473-11	s	CONNECTOR 8P, MALE	
CN356	1-562-708-11	o	CONNECTOR, FPC 13P	
CN357	1-562-708-11	o	CONNECTOR, FPC 13P	
CN358	1-564-005-11	o	CONNECTOR 6P, MALE	
CN359	1-506-469-11	s	CONNECTOR 4P, MALE	
CN360	1-506-469-11	s	CONNECTOR 4P, MALE	
CN361	1-564-002-11	s	CONNECTOR 3P, MALE	
CN362	1-562-993-11	o	CONNECTOR, FPC 30P	
CN363	1-562-993-11	o	CONNECTOR, FPC 30P	
CN364	1-562-993-11	o	CONNECTOR, FPC 30P	
D1	8-719-938-07	s	LED GL480, INFRARED	
D2	8-719-938-07	s	LED GL480, INFRARED	
D3	8-719-938-07	s	LED GL480, INFRARED	
D4	8-719-938-07	s	LED GL480, INFRARED	
D7	8-719-933-30	s	DIODE DA210S	
D8	8-719-933-30	s	DIODE DA210S	
D9	8-719-933-30	s	DIODE DA210S	
D10	8-719-933-30	s	DIODE DA210S	
IC1	8-759-196-00	s	IC UPD75048CW-018	
IC2	8-759-600-34	s	IC M54532P	
IC3	8-759-645-23	s	IC M54523P	
IC7	8-759-189-43	s	IC AN77L05-TA	
IC8	8-759-190-25	s	IC PQ30VB11	
Q1	8-729-903-81	s	PHOTOTRANSISTOR PT480	
Q2	8-729-903-81	s	PHOTOTRANSISTOR PT480	
Q3	8-729-903-81	s	PHOTOTRANSISTOR PT480	
Q4	8-729-903-81	s	PHOTOTRANSISTOR PT480	
R2	1-249-437-11	s	CARBON 47k 5% 1/4W	
R3	1-249-429-11	s	CARBON 10k 5% 1/4W	
R5	1-249-437-11	s	CARBON 47k 5% 1/4W	
R6	1-249-429-11	s	CARBON 10k 5% 1/4W	
R7	1-247-815-91	s	CARBON 220 5% 1/4W	
R8	1-249-437-11	s	CARBON 47k 5% 1/4W	
R9	1-249-429-11	s	CARBON 10k 5% 1/4W	
R10	1-247-815-91	s	CARBON 220 5% 1/4W	
R11	1-249-437-11	s	CARBON 47k 5% 1/4W	
R12	1-249-429-11	s	CARBON 10k 5% 1/4W	
R13	1-247-815-91	s	CARBON 220 5% 1/4W	

(MS-39 BOARD(for UVW-1400/1400P))

Ref. No. or Q'ty	Part No.	SP	Description	
R14	1-249-437-11	s	CARBON 47k 5% 1/4W	
R15	1-249-429-11	s	CARBON 10k 5% 1/4W	
R16	1-247-815-91	s	CARBON 220 5% 1/4W	
R17	1-249-437-11	s	CARBON 47k 5% 1/4W	
R18	1-249-429-11	s	CARBON 10k 5% 1/4W	
R19	1-249-437-11	s	CARBON 47k 5% 1/4W	
R20-24	1-249-437-11	s	CARBON 47k 5% 1/4W	
R25-30	1-249-429-11	s	CARBON 10k 5% 1/4W	
R31	1-249-437-11	s	CARBON 47k 5% 1/4W	
R32	1-249-437-11	s	CARBON 47k 5% 1/4W	
R34	1-249-417-11	s	CARBON 1k 5% 1/4W	
R35	1-249-417-11	s	CARBON 1k 5% 1/4W	
R36	1-249-417-11	s	CARBON 1k 5% 1/4W	
R37	1-249-417-11	s	CARBON 1k 5% 1/4W	
R38	1-249-437-11	s	CARBON 47k 5% 1/4W	
R42	1-249-429-11	s	CARBON 10k 5% 1/4W	
R43	1-249-429-11	s	CARBON 10k 5% 1/4W	
R44	1-247-895-91	s	CARBON 470k 5% 1/4W	
R46	1-249-437-11	s	CARBON 47k 5% 1/4W	
*R47	1-249-429-11	s	CARBON 10k 5% 1/4W	*8
	1-249-417-11	s	CARBON 1k 5% 1/4W	*9
R49	1-249-437-11	s	CARBON 47k 5% 1/4W	
*R50	1-249-429-11	s	CARBON 10k 5% 1/4W	*8
	1-249-417-11	s	CARBON 1k 5% 1/4W	*9
R51	1-249-429-11	s	CARBON 10k 5% 1/4W	
R52	1-249-429-11	s	CARBON 10k 5% 1/4W	
R53	1-249-429-11	s	CARBON 10k 5% 1/4W	
R63	1-249-429-11	s	CARBON 10k 5% 1/4W	
R64	1-215-432-00	s	METAL 3k 1% 1/6W	
R65	1-215-411-00	s	METAL 390 1% 1/6W	
X1	1-579-232-11	s	RESONATOR, CERAMIC 2.50MHz	

Note: In this list * marked parts are design changed.
Refer to pages 18-29 to 18-31 for applicable serial numbers.

MS-39A BOARD(for UVW-1200/1200P)

MS-39A board is used for UVW-1200/1200P.

Ref. No. or Q'ty	Part No.	SP	Description	
1pc	A-8275-288-A	o	MOUNTED CIRCUIT BOARD, MS-39A	
1pc	3-182-355-02	o	COVER, MC SENSOR	
C3	1-164-097-11	s	CERAMIC 0.022uF 50V	
C5	1-126-933-11	s	ELECT 100uF 20% 16V	
C6	1-164-097-11	s	CERAMIC 0.022uF 50V	
C11	1-126-947-11	s	ELECT 47uF 20% 35V	
C12	1-126-947-11	s	ELECT 47uF 20% 35V	
C13	1-164-097-11	s	CERAMIC 0.022uF 50V	
C14	1-130-728-00	s	FILM 0.0022uF 1% 100V	
C15	1-130-728-00	s	FILM 0.0022uF 1% 100V	
C16	1-164-097-11	s	CERAMIC 0.022uF 50V	
*C17	1-130-495-00	s	MYLAR 0.1uF 5% 50V	*9
CN350	1-564-011-11	o	CONNECTOR 12P, MALE	
CN351	1-506-469-11	s	CONNECTOR 4P, MALE	
CN352	1-506-467-11	s	CONNECTOR 2P, MALE	
CN353	1-506-472-11	s	CONNECTOR 7P, MALE	
CN354	1-506-480-11	s	CONNECTOR 15P, MALE	
CN355	1-506-473-11	s	CONNECTOR 8P, MALE	
CN356	1-562-708-11	o	CONNECTOR, FPC 13P	
CN357	1-562-708-11	o	CONNECTOR, FPC 13P	
CN358	1-564-005-11	o	CONNECTOR 6P, MALE	
CN359	1-506-469-11	s	CONNECTOR 4P, MALE	
CN360	1-506-469-11	s	CONNECTOR 4P, MALE	
CN361	1-564-002-11	s	CONNECTOR 3P, MALE	
CN362	1-562-993-11	o	CONNECTOR, FPC 30P	
CN363	1-562-993-11	o	CONNECTOR, FPC 30P	
CN364	1-562-993-11	o	CONNECTOR, FPC 30P	
D1	8-719-938-07	s	LED GL480, INFRARED	
D2	8-719-938-07	s	LED GL480, INFRARED	
D7	8-719-933-30	s	DIODE DA210S	
D8	8-719-933-30	s	DIODE DA210S	
D9	8-719-933-30	s	DIODE DA210S	
D10	8-719-933-30	s	DIODE DA210S	
IC1	8-759-196-00	s	IC UPD75048CW-018	
IC2	8-759-600-34	s	IC M54532P	
IC3	8-759-645-23	s	IC M54523P	
IC7	8-759-189-43	s	IC AN77L05-TA	
IC8	8-759-190-25	s	IC PQ30VB11	
Q1	8-729-903-81	s	PHOTOTRANSISTOR PT480	
Q2	8-729-903-81	s	PHOTOTRANSISTOR PT480	
R2	1-249-437-11	s	CARBON 47k 5% 1/4W	
R3	1-249-429-11	s	CARBON 10k 5% 1/4W	
R5	1-249-437-11	s	CARBON 47k 5% 1/4W	
R6	1-249-429-11	s	CARBON 10k 5% 1/4W	
R7	1-247-815-91	s	CARBON 220 5% 1/4W	
R8	1-249-437-11	s	CARBON 47k 5% 1/4W	
R9	1-249-429-11	s	CARBON 10k 5% 1/4W	
R10	1-247-815-91	s	CARBON 220 5% 1/4W	
R11	1-249-437-11	s	CARBON 47k 5% 1/4W	
R12	1-249-429-11	s	CARBON 10k 5% 1/4W	
R14	1-249-437-11	s	CARBON 47k 5% 1/4W	
R15	1-249-429-11	s	CARBON 10k 5% 1/4W	
R17	1-249-437-11	s	CARBON 47k 5% 1/4W	
R18	1-249-429-11	s	CARBON 10k 5% 1/4W	
R19-24	1-249-437-11	s	CARBON 47k 5% 1/4W	

(MS-39A BOARD(for UVW-1200/1200P))

Ref. No. or Q'ty	Part No.	SP	Description	
R25-30	1-249-429-11	s	CARBON 10k 5% 1/4W	
R31	1-249-437-11	s	CARBON 47k 5% 1/4W	
R32	1-249-437-11	s	CARBON 47k 5% 1/4W	
R34	1-249-417-11	s	CARBON 1k 5% 1/4W	
R35	1-249-417-11	s	CARBON 1k 5% 1/4W	
R36	1-249-417-11	s	CARBON 1k 5% 1/4W	
R37	1-249-417-11	s	CARBON 1k 5% 1/4W	
R38	1-249-437-11	s	CARBON 47k 5% 1/4W	
R42	1-249-429-11	s	CARBON 10k 5% 1/4W	
R43	1-249-429-11	s	CARBON 10k 5% 1/4W	
R44	1-247-895-91	s	CARBON 470k 5% 1/4W	
R46	1-249-437-11	s	CARBON 47k 5% 1/4W	
*R47	1-249-429-11	s	CARBON 10k 5% 1/4W	*8
	1-249-417-11	s	CARBON 1k 5% 1/4W	*9
R49	1-249-437-11	s	CARBON 47k 5% 1/4W	
*R50	1-249-429-11	s	CARBON 10k 5% 1/4W	*8
	1-249-417-11	s	CARBON 1k 5% 1/4W	*9
R51	1-249-429-11	s	CARBON 10k 5% 1/4W	
R52	1-249-429-11	s	CARBON 10k 5% 1/4W	
R53	1-249-429-11	s	CARBON 10k 5% 1/4W	
R63	1-249-429-11	s	CARBON 10k 5% 1/4W	
R64	1-215-432-00	s	METAL 3k 1% 1/6W	
R65	1-215-411-00	s	METAL 390 1% 1/6W	
X1	1-579-232-11	s	RESONATOR, CERAMIC 2.50MHz	

PC-62 BOARD

Two PC-62 boards are used in UVW-1400/1400P/1200/1200P.
One board has the following parts.

Ref. No. or Q'ty	Part No.	SP	Description	
*1pc	1-640-171-12	o	PRINTED CIRCUIT BOARD, PC-62	*18
1pc	3-176-598-02	o	SPRING, GROUND	
CN934	1-565-038-11	s	CONNECTOR, FPC 5P	
PH1	8-719-939-05	s	PHOTOINTERRUPTER GP-1S54	
PH2	8-719-939-05	s	PHOTOINTERRUPTER GP-1S54	
PH3	8-719-939-05	s	PHOTOINTERRUPTER GP-1S54	
R1	1-247-825-31	s	CARBON 560 5% 1/4W	
R2	1-247-825-31	s	CARBON 560 5% 1/4W	
R3	1-247-825-31	s	CARBON 560 5% 1/4W	

Note: In this list * marked parts are design changed.
Refer to pages 18-29 to 18-31 for applicable serial numbers.

PC-70 BOARD

Ref. No. or Q'ty	Part No.	SP	Description	
Two PC-70 boards are used in UVW-1400/1400P/1200/1200P. One board has the following parts.				
*1pc	A-8276-625-A	o	MOUNTED CIRCUIT BOARD, PC-70	*19
1pc	3-176-598-02	o	SPRING, GROUND	
CN934	1-565-038-11	s	CONNECTOR, FPC 5P	
PH1	8-719-939-05	s	PHOTOINTERRUPTER GP-1S54	
PH2	8-719-939-05	s	PHOTOINTERRUPTER GP-1S54	
PH3	8-719-939-05	s	PHOTOINTERRUPTER GP-1S54	
R1	1-247-825-31	s	CARBON 560 5% 1/4W	
R2	1-247-825-31	s	CARBON 560 5% 1/4W	
R3	1-247-825-31	s	CARBON 560 5% 1/4W	

PD-35 BOARD

Ref. No. or Q'ty	Part No.	SP	Description
1pc	1-622-596-11	o	PRINTED CIRCUIT BOARD, PD-35
CN851	1-564-001-11	o	CONNECTOR 2P, MALE
CN854	1-564-005-11	o	CONNECTOR 6P, MALE

PTC-66 BOARD

Ref. No. or Q'ty	Part No.	SP	Description	
*1pc	1-648-926-11	o	PRINTED CIRCUIT BOARD, PTC-66	*8
	1-648-926-12	o	PRINTED CIRCUIT BOARD, PTC-66	*9
CN944	1-564-014-11	s	CONNECTOR 4P, MALE	
PH1	8-719-939-05	s	PHOTOINTERRUPTER GP-1S54	
PH2	8-719-939-05	s	PHOTOINTERRUPTER GP-1S54	
R1	1-247-815-91	s	CARBON 220 5% 1/4W	
R2	1-247-815-91	s	CARBON 220 5% 1/4W	

PTC-67 BOARD

Ref. No. or Q'ty	Part No.	SP	Description	
*1pc	1-648-922-11	o	PRINTED CIRCUIT BOARD, PTC-67	*33
	1-648-922-12	o	PRINTED CIRCUIT BOARD, PTC-67	*34
C1	1-164-096-11	s	CERAMIC 0.01uF 50V	
CN941	1-506-472-11	s	CONNECTOR 7P, MALE	
CN942	1-506-467-11	s	CONNECTOR 2P, MALE	
CN943	1-506-481-11	s	CONNECTOR 2P, MALE	
PH1	8-719-939-05	s	PHOTOINTERRUPTER GP-1S54	
R1	1-249-408-11	s	CARBON 180 5% 1/4W	

PTC-68 BOARD

Ref. No. or Q'ty	Part No.	SP	Description	
*1pc	1-648-927-11	o	PRINTED CIRCUIT BOARD, PTC-68	*8
	1-648-927-12	o	PRINTED CIRCUIT BOARD, PTC-68	*9
CN940	1-506-469-11	s	CONNECTOR 4P, MALE	
PH1	8-719-939-05	s	PHOTOINTERRUPTER GP-1S54	
PH2	8-719-939-05	s	PHOTOINTERRUPTER GP-1S54	
R1	1-247-815-91	s	CARBON 220 5% 1/4W	
R2	1-247-815-91	s	CARBON 220 5% 1/4W	

RM-126 BOARD

Ref. No. or Q'ty	Part No.	SP	Description	
*1pc	1-648-924-11	o	PRINTED CIRCUIT BOARD, RM-126	*28
	1-648-924-12	o	PRINTED CIRCUIT BOARD, RM-126	*29
CN946	1-563-233-11	o	CONNECTOR, FPC 13P, FEMALE	
CN947	1-564-014-11	s	CONNECTOR 4P, MALE	
CN948	1-564-718-11	o	CONNECTOR 2P, MALE	
CN949	1-564-013-11	o	CONNECTOR 3P, MALE	

Note: In this list * marked parts are design changed.
Refer to pages 18-29 to 18-31 for applicable serial numbers.

RM-127 BOARD

Ref. No. or Q'ty	Part No.	SP	Description	
*1pc	1-648-925-11	o	PRINTED CIRCUIT BOARD, RM-127	*28
	1-648-925-12	o	PRINTED CIRCUIT BOARD, RM-127	*29
CN951	1-563-233-11	o	CONNECTOR, FPC 13P, FEMALE	
CN952	1-564-014-11	s	CONNECTOR 4P, MALE	
CN953	1-564-718-11	o	CONNECTOR 2P, MALE	
CN954	1-564-013-11	o	CONNECTOR 3P, MALE	

RP-70B BOARD(for UVW-1400, NTSC)

Ref. No. or Q'ty	Part No.	SP	Description
RP-70B board is used for UVW-1400.			
1pc	A-8275-574-A	o	MOUNTED CIRCUIT BOARD, RP-70B
1pc	3-182-385-02	o	PLATE, SHIELD (S), CARD
1pc	7-621-759-45	s	SCREW, +PSW2.6x6
1pc	3-179-084-01	s	LEVER (R), PC BOARD
1pc	3-179-085-01	s	LEVER (L), PC BOARD
C2	1-163-033-91	s	CERAMIC, CHIP 0.022uF 50V
C3	1-126-933-11	s	ELECT 100uF 20% 16V
C4	1-163-033-91	s	CERAMIC, CHIP 0.022uF 50V
C5	1-164-004-11	s	CERAMIC, CHIP 0.1uF 10% 25V
C6	1-126-933-11	s	ELECT 100uF 20% 16V
C7	1-163-033-91	s	CERAMIC, CHIP 0.022uF 50V
C8	1-164-004-11	s	CERAMIC, CHIP 0.1uF 10% 25V
C11	1-163-033-91	s	CERAMIC, CHIP 0.022uF 50V
C12	1-163-033-91	s	CERAMIC, CHIP 0.022uF 50V
C13	1-126-933-11	s	ELECT 100uF 20% 16V
C14	1-163-033-91	s	CERAMIC, CHIP 0.022uF 50V
C15	1-126-933-11	s	ELECT 100uF 20% 16V
C16	1-163-033-91	s	CERAMIC, CHIP 0.022uF 50V
C17	1-163-033-91	s	CERAMIC, CHIP 0.022uF 50V
C18	1-126-933-11	s	ELECT 100uF 20% 16V
C19	1-163-227-11	s	CERAMIC, CHIP 10pF 5% 50V
C20	1-163-033-91	s	CERAMIC, CHIP 0.022uF 50V
C21	1-164-004-11	s	CERAMIC, CHIP 0.1uF 10% 25V
C23	1-126-933-11	s	ELECT 100uF 20% 16V
C103	1-126-933-11	s	ELECT 100uF 20% 16V
C104	1-163-033-91	s	CERAMIC, CHIP 0.022uF 50V
C105	1-164-004-11	s	CERAMIC, CHIP 0.1uF 10% 25V
C106	1-126-933-11	s	ELECT 100uF 20% 16V
C107	1-163-033-91	s	CERAMIC, CHIP 0.022uF 50V
C108	1-164-004-11	s	CERAMIC, CHIP 0.1uF 10% 25V
C111	1-163-033-91	s	CERAMIC, CHIP 0.022uF 50V
C112	1-163-033-91	s	CERAMIC, CHIP 0.022uF 50V
C113	1-126-933-11	s	ELECT 100uF 20% 16V
C114	1-163-033-91	s	CERAMIC, CHIP 0.022uF 50V
C115	1-126-933-11	s	ELECT 100uF 20% 16V
C116	1-163-033-91	s	CERAMIC, CHIP 0.022uF 50V
C117	1-163-033-91	s	CERAMIC, CHIP 0.022uF 50V
C118	1-126-933-11	s	ELECT 100uF 20% 16V
C119	1-163-227-11	s	CERAMIC, CHIP 10pF 5% 50V
C120	1-163-033-91	s	CERAMIC, CHIP 0.022uF 50V
C121	1-164-004-11	s	CERAMIC, CHIP 0.1uF 10% 25V
C123	1-126-933-11	s	ELECT 100uF 20% 16V
C202	1-163-033-91	s	CERAMIC, CHIP 0.022uF 50V
C203	1-126-933-11	s	ELECT 100uF 20% 16V
C204	1-163-033-91	s	CERAMIC, CHIP 0.022uF 50V
C205	1-164-004-11	s	CERAMIC, CHIP 0.1uF 10% 25V
C206	1-126-933-11	s	ELECT 100uF 20% 16V
C207	1-163-033-91	s	CERAMIC, CHIP 0.022uF 50V
C208	1-164-004-11	s	CERAMIC, CHIP 0.1uF 10% 25V
C211	1-163-033-91	s	CERAMIC, CHIP 0.022uF 50V
C212	1-163-033-91	s	CERAMIC, CHIP 0.022uF 50V
C213	1-126-933-11	s	ELECT 100uF 20% 16V
C214	1-163-033-91	s	CERAMIC, CHIP 0.022uF 50V
C215	1-126-933-11	s	ELECT 100uF 20% 16V
C216	1-163-033-91	s	CERAMIC, CHIP 0.022uF 50V
C217	1-163-033-91	s	CERAMIC, CHIP 0.022uF 50V
C218	1-126-933-11	s	ELECT 100uF 20% 16V

Note: In this list * marked parts are design changed.
Refer to pages 18-29 to 18-31 for applicable serial numbers.

(RP-70B BOARD(for UVW-1400, NTSC))

Ref. No. or Q'ty	Part No.	SP	Description
C219	1-163-227-11	s	CERAMIC, CHIP 10pF 5% 50V
C220	1-163-033-91	s	CERAMIC, CHIP 0.022uF 50V
C221	1-164-004-11	s	CERAMIC, CHIP 0.1uF 10% 25V
C223	1-126-933-11	s	ELECT 100uF 20% 16V
C303	1-126-933-11	s	ELECT 100uF 20% 16V
C304	1-163-033-91	s	CERAMIC, CHIP 0.022uF 50V
C305	1-164-004-11	s	CERAMIC, CHIP 0.1uF 10% 25V
C306	1-126-933-11	s	ELECT 100uF 20% 16V
C307	1-163-033-91	s	CERAMIC, CHIP 0.022uF 50V
C308	1-164-004-11	s	CERAMIC, CHIP 0.1uF 10% 25V
C311	1-163-033-91	s	CERAMIC, CHIP 0.022uF 50V
C312	1-163-033-91	s	CERAMIC, CHIP 0.022uF 50V
C313	1-126-933-11	s	ELECT 100uF 20% 16V
C314	1-163-033-91	s	CERAMIC, CHIP 0.022uF 50V
C315	1-126-933-11	s	ELECT 100uF 20% 16V
C316	1-163-033-91	s	CERAMIC, CHIP 0.022uF 50V
C317	1-163-033-91	s	CERAMIC, CHIP 0.022uF 50V
C318	1-126-933-11	s	ELECT 100uF 20% 16V
C319	1-163-227-11	s	CERAMIC, CHIP 10pF 5% 50V
C320	1-163-033-91	s	CERAMIC, CHIP 0.022uF 50V
C321	1-164-004-11	s	CERAMIC, CHIP 0.1uF 10% 25V
C323	1-126-933-11	s	ELECT 100uF 20% 16V
C501-507	1-163-033-91	s	CERAMIC, CHIP 0.022uF 50V
C623	1-126-933-11	s	ELECT 100uF 20% 16V
C624	1-163-033-91	s	CERAMIC, CHIP 0.022uF 50V
C625	1-126-933-11	s	ELECT 100uF 20% 16V
C626	1-163-033-91	s	CERAMIC, CHIP 0.022uF 50V
C627	1-126-933-11	s	ELECT 100uF 20% 16V
C628	1-126-933-11	s	ELECT 100uF 20% 16V
C629	1-163-017-00	s	CERAMIC, CHIP 0.0047uF 5% 50V
C630	1-163-017-00	s	CERAMIC, CHIP 0.0047uF 5% 50V
*C631	1-163-023-00	s	CERAMIC, CHIP 0.015uF 5% 50V *29
C632	1-164-182-11	s	CERAMIC, CHIP 3300pF 10% 100V
C635	1-136-562-11	s	FILM 0.0082uF 5% 630V
C636	1-131-368-00	s	TANTALUM 3.3uF 10% 16V
C701	1-163-033-91	s	CERAMIC, CHIP 0.022uF 50V
C702	1-126-933-11	s	ELECT 100uF 20% 16V
C703	1-126-933-11	s	ELECT 100uF 20% 16V
C704	1-163-033-91	s	CERAMIC, CHIP 0.022uF 50V
C705	1-163-033-91	s	CERAMIC, CHIP 0.022uF 50V
C706	1-126-933-11	s	ELECT 100uF 20% 16V
C707	1-163-033-91	s	CERAMIC, CHIP 0.022uF 50V
C708	1-126-933-11	s	ELECT 100uF 20% 16V
C709	1-163-033-91	s	CERAMIC, CHIP 0.022uF 50V
C710	1-126-933-11	s	ELECT 100uF 20% 16V
C711	1-126-933-11	s	ELECT 100uF 20% 16V
C712	1-163-033-91	s	CERAMIC, CHIP 0.022uF 50V
C713	1-163-033-91	s	CERAMIC, CHIP 0.022uF 50V
C714	1-126-933-11	s	ELECT 100uF 20% 16V
C715	1-163-033-91	s	CERAMIC, CHIP 0.022uF 50V
C716	1-126-933-11	s	ELECT 100uF 20% 16V
C717	1-163-033-91	s	CERAMIC, CHIP 0.022uF 50V
C718	1-126-933-11	s	ELECT 100uF 20% 16V
C719	1-126-933-11	s	ELECT 100uF 20% 16V
C720	1-163-033-91	s	CERAMIC, CHIP 0.022uF 50V
C721	1-163-033-91	s	CERAMIC, CHIP 0.022uF 50V
C722	1-126-933-11	s	ELECT 100uF 20% 16V
C723	1-163-033-91	s	CERAMIC, CHIP 0.022uF 50V
C724	1-126-933-11	s	ELECT 100uF 20% 16V

(RP-70B BOARD(for UVW-1400, NTSC))

Ref. No. or Q'ty	Part No.	SP	Description
C725	1-163-033-91	s	CERAMIC, CHIP 0.022uF 50V
C726	1-126-933-11	s	ELECT 100uF 20% 16V
C727	1-126-933-11	s	ELECT 100uF 20% 16V
C728	1-163-033-91	s	CERAMIC, CHIP 0.022uF 50V
C729	1-163-033-91	s	CERAMIC, CHIP 0.022uF 50V
C730	1-126-933-11	s	ELECT 100uF 20% 16V
C731	1-163-033-91	s	CERAMIC, CHIP 0.022uF 50V
C732	1-126-933-11	s	ELECT 100uF 20% 16V
CN1	1-506-468-11	o	CONNECTOR 3P, MALE
CN101	1-506-468-11	o	CONNECTOR 3P, MALE
CN110	1-573-600-21	s	CONNECTOR, PHEC 100P, MALE
CN201	1-506-468-11	o	CONNECTOR 3P, MALE
CN301	1-506-468-11	o	CONNECTOR 3P, MALE
D701	8-719-123-82	s	DIODE 1SS303-T1
D702	8-719-123-82	s	DIODE 1SS303-T1
D703	8-719-123-85	s	DIODE 1SS304
D704	8-719-123-85	s	DIODE 1SS304
IC1	1-810-336-11	s	HIC BP-025
IC2	1-810-335-11	s	HIC BP-024
IC101	1-810-336-11	s	HIC BP-025
IC102	1-810-335-11	s	HIC BP-024
IC201	1-810-336-11	s	HIC BP-025
IC202	1-810-335-11	s	HIC BP-024
IC301	1-810-336-11	s	HIC BP-025
IC302	1-810-335-11	s	HIC BP-024
IC501	8-759-009-10	s	IC MC14069UBF
IC502	8-759-009-10	s	IC MC14069UBF
IC503	8-759-009-10	s	IC MC14069UBF
IC701	8-759-182-84	s	IC PQ05SZ5U
IC702	8-759-189-43	s	IC AN77L05-TA
IC703	8-759-168-20	s	IC TA78L09S
IC704	8-759-168-20	s	IC TA78L09S
IC705	8-759-822-95	s	IC L79M05T-FA
IC706	8-759-700-65	s	IC NJM79L05A
IC707	8-759-700-68	s	IC NJM79L09A
IC708	8-759-700-68	s	IC NJM79L09A
L1-5	1-410-482-31	s	INDUCTOR 100uH
L101-105	1-410-482-31	s	INDUCTOR 100uH
L201-205	1-410-482-31	s	INDUCTOR 100uH
L301-305	1-410-482-31	s	INDUCTOR 100uH
L603	1-412-533-21	s	INDUCTOR 47uH
L701	1-412-533-21	s	INDUCTOR 47uH
L702	1-412-533-21	s	INDUCTOR 47uH
L703	1-412-533-21	s	INDUCTOR 47uH
L704	1-412-533-21	s	INDUCTOR 47uH
Q1	8-729-117-72	s	TRANSISTOR 2SC4178
Q2	8-729-117-72	s	TRANSISTOR 2SC4178
Q3	8-729-117-72	s	TRANSISTOR 2SC4178
Q102	8-729-117-72	s	TRANSISTOR 2SC4178
Q103	8-729-117-72	s	TRANSISTOR 2SC4178
Q201	8-729-117-72	s	TRANSISTOR 2SC4178
Q202	8-729-117-72	s	TRANSISTOR 2SC4178
Q203	8-729-117-72	s	TRANSISTOR 2SC4178
Q302	8-729-117-72	s	TRANSISTOR 2SC4178
Q303	8-729-117-72	s	TRANSISTOR 2SC4178
Q501	8-729-209-06	s	TRANSISTOR 2SC4213-A
Q609	8-729-905-18	s	TRANSISTOR DTC144EU
Q610	8-729-140-63	s	TRANSISTOR 2SA1611-M5M6

Note: In this list * marked parts are design changed.
Refer to pages 18-29 to 18-31 for applicable serial numbers.

(RP-70B BOARD(for UVW-1400, NTSC))

Ref. No. or Q'ty	Part No.	SP	Description
Q611	8-729-022-00	s	TRANSISTOR 2SB1416-R(TA)
Q612	8-729-117-32	s	TRANSISTOR 2SC4177
Q613	8-729-159-65	s	TRANSISTOR 2SD596-DV5
Q614	8-729-159-65	s	TRANSISTOR 2SD596-DV5
Q615	8-729-140-63	s	TRANSISTOR 2SA1611-M5M6
Q616	8-729-209-06	s	TRANSISTOR 2SC4213-A
Q617	8-729-209-06	s	TRANSISTOR 2SC4213-A
R1	1-216-041-00	s	METAL, CHIP 470 5% 1/10W
R2	1-216-624-11	s	METAL, CHIP 75 0.5% 1/10W
R4	1-216-001-00	s	METAL, CHIP 10 5% 1/10W
R5	1-216-047-91	s	METAL, CHIP 820 5% 1/10W
R6	1-216-047-91	s	METAL, CHIP 820 5% 1/10W
R7	1-216-053-00	s	METAL, CHIP 1.5k 5% 1/10W
R8	1-216-009-00	s	METAL, CHIP 22 5% 1/10W
R9	1-216-055-00	s	METAL, CHIP 1.8k 5% 1/10W
R10	1-216-073-00	s	METAL, CHIP 10k 5% 1/10W
R11	1-216-009-00	s	METAL, CHIP 22 5% 1/10W
R12	1-216-057-00	s	METAL, CHIP 2.2k 5% 1/10W
R13	1-216-001-00	s	METAL, CHIP 10 5% 1/10W
R16	1-216-001-00	s	METAL, CHIP 10 5% 1/10W
R18	1-216-001-00	s	METAL, CHIP 10 5% 1/10W
R19	1-216-687-11	s	METAL, CHIP 33k 0.5% 1/10W
R21	1-208-822-11	s	METAL, CHIP 47k 0.5% 1/10W
R22	1-216-625-11	s	METAL, CHIP 82 0.5% 1/10W
R106	1-216-047-91	s	METAL, CHIP 820 5% 1/10W
R107	1-216-053-00	s	METAL, CHIP 1.5k 5% 1/10W
R108	1-216-009-00	s	METAL, CHIP 22 5% 1/10W
R109	1-216-055-00	s	METAL, CHIP 1.8k 5% 1/10W
R110	1-216-073-00	s	METAL, CHIP 10k 5% 1/10W
R111	1-216-009-00	s	METAL, CHIP 22 5% 1/10W
R112	1-216-057-00	s	METAL, CHIP 2.2k 5% 1/10W
R113	1-216-001-00	s	METAL, CHIP 10 5% 1/10W
R116	1-216-001-00	s	METAL, CHIP 10 5% 1/10W
R118	1-216-001-00	s	METAL, CHIP 10 5% 1/10W
R119	1-216-687-11	s	METAL, CHIP 33k 0.5% 1/10W
R121	1-208-822-11	s	METAL, CHIP 47k 0.5% 1/10W
R122	1-216-625-11	s	METAL, CHIP 82 0.5% 1/10W
R201	1-216-041-00	s	METAL, CHIP 470 5% 1/10W
R202	1-216-624-11	s	METAL, CHIP 75 0.5% 1/10W
R204	1-216-001-00	s	METAL, CHIP 10 5% 1/10W
R205	1-216-047-91	s	METAL, CHIP 820 5% 1/10W
R206	1-216-047-91	s	METAL, CHIP 820 5% 1/10W
R207	1-216-053-00	s	METAL, CHIP 1.5k 5% 1/10W
R208	1-216-009-00	s	METAL, CHIP 22 5% 1/10W
R209	1-216-055-00	s	METAL, CHIP 1.8k 5% 1/10W
R210	1-216-073-00	s	METAL, CHIP 10k 5% 1/10W
R211	1-216-009-00	s	METAL, CHIP 22 5% 1/10W
R212	1-216-057-00	s	METAL, CHIP 2.2k 5% 1/10W
R213	1-216-001-00	s	METAL, CHIP 10 5% 1/10W
R216	1-216-001-00	s	METAL, CHIP 10 5% 1/10W
R218	1-216-001-00	s	METAL, CHIP 10 5% 1/10W
R219	1-208-822-11	s	METAL, CHIP 47k 0.5% 1/10W
R221	1-216-689-11	s	METAL, CHIP 39k 0.5% 1/10W
R222	1-216-625-11	s	METAL, CHIP 82 0.5% 1/10W
R306	1-216-047-91	s	METAL, CHIP 820 5% 1/10W
R307	1-216-053-00	s	METAL, CHIP 1.5k 5% 1/10W
R308	1-216-009-00	s	METAL, CHIP 22 5% 1/10W
R309	1-216-055-00	s	METAL, CHIP 1.8k 5% 1/10W

(RP-70B BOARD(for UVW-1400, NTSC))

Ref. No. or Q'ty	Part No.	SP	Description
R310	1-216-073-00	s	METAL, CHIP 10k 5% 1/10W
R311	1-216-009-00	s	METAL, CHIP 22 5% 1/10W
R312	1-216-057-00	s	METAL, CHIP 2.2k 5% 1/10W
R313	1-216-001-00	s	METAL, CHIP 10 5% 1/10W
R316	1-216-001-00	s	METAL, CHIP 10 5% 1/10W
R318	1-216-001-00	s	METAL, CHIP 10 5% 1/10W
R319	1-208-822-11	s	METAL, CHIP 47k 0.5% 1/10W
R321	1-216-689-11	s	METAL, CHIP 39k 0.5% 1/10W
R322	1-216-625-11	s	METAL, CHIP 82 0.5% 1/10W
R501	1-216-073-00	s	METAL, CHIP 10k 5% 1/10W
R502	1-216-049-91	s	METAL, CHIP 1k 5% 1/10W
R503	1-216-073-00	s	METAL, CHIP 10k 5% 1/10W
R504	1-216-049-91	s	METAL, CHIP 1k 5% 1/10W
R505	1-216-049-91	s	METAL, CHIP 1k 5% 1/10W
R506	1-216-081-00	s	METAL, CHIP 22k 5% 1/10W
R507	1-216-081-00	s	METAL, CHIP 22k 5% 1/10W
R508	1-216-081-00	s	METAL, CHIP 22k 5% 1/10W
R509	1-216-073-00	s	METAL, CHIP 10k 5% 1/10W
R510	1-216-049-91	s	METAL, CHIP 1k 5% 1/10W
R511	1-216-049-91	s	METAL, CHIP 1k 5% 1/10W
R512	1-216-073-00	s	METAL, CHIP 10k 5% 1/10W
R513	1-216-049-91	s	METAL, CHIP 1k 5% 1/10W
R514	1-216-073-00	s	METAL, CHIP 10k 5% 1/10W
R515	1-216-049-91	s	METAL, CHIP 1k 5% 1/10W
R516	1-216-049-91	s	METAL, CHIP 1k 5% 1/10W
R517	1-216-049-91	s	METAL, CHIP 1k 5% 1/10W
R518	1-216-073-00	s	METAL, CHIP 10k 5% 1/10W
R519	1-216-073-00	s	METAL, CHIP 10k 5% 1/10W
R631	1-216-085-00	s	METAL, CHIP 33k 5% 1/10W
R632	1-216-065-00	s	METAL, CHIP 4.7k 5% 1/10W
R633	1-216-051-00	s	METAL, CHIP 1.2k 5% 1/10W
R634	1-216-071-00	s	METAL, CHIP 8.2k 5% 1/10W
R635	1-216-081-00	s	METAL, CHIP 22k 5% 1/10W
R636	1-216-093-00	s	METAL, CHIP 68k 5% 1/10W
R637	1-216-093-00	s	METAL, CHIP 68k 5% 1/10W
R639	1-216-073-00	s	METAL, CHIP 10k 5% 1/10W
R640	1-216-077-00	s	METAL, CHIP 15k 5% 1/10W
R641	1-216-057-00	s	METAL, CHIP 2.2k 5% 1/10W
R642	1-216-057-00	s	METAL, CHIP 2.2k 5% 1/10W
RV1	1-241-783-11	s	RES, ADJ METAL 2.2k
RV2	1-241-761-11	s	RES, ADJ METAL 1k
RV101	1-241-783-11	s	RES, ADJ METAL 2.2k
RV102	1-241-761-11	s	RES, ADJ METAL 1k
RV201	1-241-783-11	s	RES, ADJ METAL 2.2k
RV202	1-241-761-11	s	RES, ADJ METAL 1k
RV301	1-241-783-11	s	RES, ADJ METAL 2.2k
RV302	1-241-761-11	s	RES, ADJ METAL 1k
S1	1-553-977-00	s	SWITCH, SLIDE
S101	1-553-977-00	s	SWITCH, SLIDE
S201	1-553-977-00	s	SWITCH, SLIDE
S301	1-553-977-00	s	SWITCH, SLIDE
T1	1-423-659-11	s	TRANSFORMER, RF OUTPUT
T2	1-423-658-11	s	TRANSFORMER, RF INPUT
T101	1-423-659-11	s	TRANSFORMER, RF OUTPUT
T102	1-423-658-11	s	TRANSFORMER, RF INPUT
T201	1-423-659-11	s	TRANSFORMER, RF OUTPUT
T202	1-423-657-11	s	TRANSFORMER, RF INPUT
T301	1-423-659-11	s	TRANSFORMER, RF OUTPUT

Note: In this list * marked parts are design changed.
Refer to pages 18-29 to 18-31 for applicable serial numbers.

(RP-70B BOARD(for UVW-1400, NTSC))

Ref. No. or Q'ty	Part No.	SP	Description
T302	1-423-657-11	s	TRANSFORMER, RF INPUT
T603	1-424-511-11	s	TRANSFORMER, FE

RP-70BP BOARD(for UVW-1400P, PAL)

Ref. No. or Q'ty	Part No.	SP	Description
RP-70BP board is used for UVW-1400P.			
1pc	A-8275-607-A	o	MOUNTED CIRCUIT BOARD, RP-70BP
1pc	3-182-385-02	o	PLATE, SHIELD (S), CARD
1pc	7-621-759-45	s	SCREW, +PSW2.6x6
1pc	3-179-084-01	s	LEVER (R), PC BOARD
1pc	3-179-085-01	s	LEVER (L), PC BOARD
C2	1-163-033-91	s	CERAMIC, CHIP 0.022uF 50V
C3	1-126-933-11	s	ELECT 100uF 20% 16V
C4	1-163-033-91	s	CERAMIC, CHIP 0.022uF 50V
C5	1-164-004-11	s	CERAMIC, CHIP 0.1uF 10% 25V
C6	1-126-933-11	s	ELECT 100uF 20% 16V
C7	1-163-033-91	s	CERAMIC, CHIP 0.022uF 50V
C8	1-164-004-11	s	CERAMIC, CHIP 0.1uF 10% 25V
C11	1-163-033-91	s	CERAMIC, CHIP 0.022uF 50V
C12	1-163-033-91	s	CERAMIC, CHIP 0.022uF 50V
C13	1-126-933-11	s	ELECT 100uF 20% 16V
C14	1-163-033-91	s	CERAMIC, CHIP 0.022uF 50V
C15	1-126-933-11	s	ELECT 100uF 20% 16V
C16	1-163-033-91	s	CERAMIC, CHIP 0.022uF 50V
C17	1-163-033-91	s	CERAMIC, CHIP 0.022uF 50V
C18	1-126-933-11	s	ELECT 100uF 20% 16V
C19	1-163-227-11	s	CERAMIC, CHIP 10pF 5% 50V
C20	1-163-033-91	s	CERAMIC, CHIP 0.022uF 50V
C21	1-164-004-11	s	CERAMIC, CHIP 0.1uF 10% 25V
C23	1-126-933-11	s	ELECT 100uF 20% 16V
C103	1-126-933-11	s	ELECT 100uF 20% 16V
C104	1-163-033-91	s	CERAMIC, CHIP 0.022uF 50V
C105	1-164-004-11	s	CERAMIC, CHIP 0.1uF 10% 25V
C106	1-126-933-11	s	ELECT 100uF 20% 16V
C107	1-163-033-91	s	CERAMIC, CHIP 0.022uF 50V
C108	1-164-004-11	s	CERAMIC, CHIP 0.1uF 10% 25V
C111	1-163-033-91	s	CERAMIC, CHIP 0.022uF 50V
C112	1-163-033-91	s	CERAMIC, CHIP 0.022uF 50V
C113	1-126-933-11	s	ELECT 100uF 20% 16V
C114	1-163-033-91	s	CERAMIC, CHIP 0.022uF 50V
C115	1-126-933-11	s	ELECT 100uF 20% 16V
C116	1-163-033-91	s	CERAMIC, CHIP 0.022uF 50V
C117	1-163-033-91	s	CERAMIC, CHIP 0.022uF 50V
C118	1-126-933-11	s	ELECT 100uF 20% 16V
C119	1-163-227-11	s	CERAMIC, CHIP 10pF 5% 50V
C120	1-163-033-91	s	CERAMIC, CHIP 0.022uF 50V
C121	1-164-004-11	s	CERAMIC, CHIP 0.1uF 10% 25V
C123	1-126-933-11	s	ELECT 100uF 20% 16V
C202	1-163-033-91	s	CERAMIC, CHIP 0.022uF 50V
C203	1-126-933-11	s	ELECT 100uF 20% 16V
C204	1-163-033-91	s	CERAMIC, CHIP 0.022uF 50V
C205	1-164-004-11	s	CERAMIC, CHIP 0.1uF 10% 25V
C206	1-126-933-11	s	ELECT 100uF 20% 16V
C207	1-163-033-91	s	CERAMIC, CHIP 0.022uF 50V
C208	1-164-004-11	s	CERAMIC, CHIP 0.1uF 10% 25V
C211	1-163-033-91	s	CERAMIC, CHIP 0.022uF 50V
C212	1-163-033-91	s	CERAMIC, CHIP 0.022uF 50V
C213	1-126-933-11	s	ELECT 100uF 20% 16V
C214	1-163-033-91	s	CERAMIC, CHIP 0.022uF 50V
C215	1-126-933-11	s	ELECT 100uF 20% 16V
C216	1-163-033-91	s	CERAMIC, CHIP 0.022uF 50V
C217	1-163-033-91	s	CERAMIC, CHIP 0.022uF 50V
C218	1-126-933-11	s	ELECT 100uF 20% 16V

Note: In this list * marked parts are design changed.
Refer to pages 18-29 to 18-31 for applicable serial numbers.

(RP-70BP BOARD(for UVW-1400P, PAL))

Ref. No. or Q'ty	Part No.	SP	Description	
C219	1-163-227-11	s	CERAMIC, CHIP 10pF 5% 50V	
C220	1-163-033-91	s	CERAMIC, CHIP 0.022uF 50V	
C221	1-164-004-11	s	CERAMIC, CHIP 0.1uF 10% 25V	
C223	1-126-933-11	s	ELECT 100uF 20% 16V	
C303	1-126-933-11	s	ELECT 100uF 20% 16V	
C304	1-163-033-91	s	CERAMIC, CHIP 0.022uF 50V	
C305	1-164-004-11	s	CERAMIC, CHIP 0.1uF 10% 25V	
C306	1-126-933-11	s	ELECT 100uF 20% 16V	
C307	1-163-033-91	s	CERAMIC, CHIP 0.022uF 50V	
C308	1-164-004-11	s	CERAMIC, CHIP 0.1uF 10% 25V	
C311	1-163-033-91	s	CERAMIC, CHIP 0.022uF 50V	
C312	1-163-033-91	s	CERAMIC, CHIP 0.022uF 50V	
C313	1-126-933-11	s	ELECT 100uF 20% 16V	
C314	1-163-033-91	s	CERAMIC, CHIP 0.022uF 50V	
C315	1-126-933-11	s	ELECT 100uF 20% 16V	
C316	1-163-033-91	s	CERAMIC, CHIP 0.022uF 50V	
C317	1-163-033-91	s	CERAMIC, CHIP 0.022uF 50V	
C318	1-126-933-11	s	ELECT 100uF 20% 16V	
C319	1-163-227-11	s	CERAMIC, CHIP 10pF 5% 50V	
C320	1-163-033-91	s	CERAMIC, CHIP 0.022uF 50V	
C321	1-164-004-11	s	CERAMIC, CHIP 0.1uF 10% 25V	
C323	1-126-933-11	s	ELECT 100uF 20% 16V	
C501-507	1-163-033-91	s	CERAMIC, CHIP 0.022uF 50V	
C623	1-126-933-11	s	ELECT 100uF 20% 16V	
C624	1-163-033-91	s	CERAMIC, CHIP 0.022uF 50V	
C625	1-126-933-11	s	ELECT 100uF 20% 16V	
C626	1-163-033-91	s	CERAMIC, CHIP 0.022uF 50V	
C627	1-126-933-11	s	ELECT 100uF 20% 16V	
C628	1-126-933-11	s	ELECT 100uF 20% 16V	
C629	1-163-017-00	s	CERAMIC, CHIP 0.0047uF 5% 50V	
C630	1-163-017-00	s	CERAMIC, CHIP 0.0047uF 5% 50V	
*C631	1-164-232-11	s	CERAMIC, CHIP 0.01uF 10% 100V	*28
	1-163-023-00	s	CERAMIC, CHIP 0.015uF 5% 50V	*29
C632	1-164-182-11	s	CERAMIC, CHIP 3300pF 10% 100V	
C635	1-136-562-11	s	FILM 0.0082uF 5% 630V	
C636	1-131-368-00	s	TANTALUM 3.3uF 10% 16V	
C701	1-163-033-91	s	CERAMIC, CHIP 0.022uF 50V	
C702	1-126-933-11	s	ELECT 100uF 20% 16V	
C703	1-126-933-11	s	ELECT 100uF 20% 16V	
C704	1-163-033-91	s	CERAMIC, CHIP 0.022uF 50V	
C705	1-163-033-91	s	CERAMIC, CHIP 0.022uF 50V	
C706	1-126-933-11	s	ELECT 100uF 20% 16V	
C707	1-163-033-91	s	CERAMIC, CHIP 0.022uF 50V	
C708	1-126-933-11	s	ELECT 100uF 20% 16V	
C709	1-163-033-91	s	CERAMIC, CHIP 0.022uF 50V	
C710	1-126-933-11	s	ELECT 100uF 20% 16V	
C711	1-126-933-11	s	ELECT 100uF 20% 16V	
C712	1-163-033-91	s	CERAMIC, CHIP 0.022uF 50V	
C713	1-163-033-91	s	CERAMIC, CHIP 0.022uF 50V	
C714	1-126-933-11	s	ELECT 100uF 20% 16V	
C715	1-163-033-91	s	CERAMIC, CHIP 0.022uF 50V	
C716	1-126-933-11	s	ELECT 100uF 20% 16V	
C717	1-163-033-91	s	CERAMIC, CHIP 0.022uF 50V	
C718	1-126-933-11	s	ELECT 100uF 20% 16V	
C719	1-126-933-11	s	ELECT 100uF 20% 16V	
C720	1-163-033-91	s	CERAMIC, CHIP 0.022uF 50V	
C721	1-163-033-91	s	CERAMIC, CHIP 0.022uF 50V	
C722	1-126-933-11	s	ELECT 100uF 20% 16V	

(RP-70BP BOARD(for UVW-1400P, PAL))

Ref. No. or Q'ty	Part No.	SP	Description
C723	1-163-033-91	s	CERAMIC, CHIP 0.022uF 50V
C724	1-126-933-11	s	ELECT 100uF 20% 16V
C725	1-163-033-91	s	CERAMIC, CHIP 0.022uF 50V
C726	1-126-933-11	s	ELECT 100uF 20% 16V
C727	1-126-933-11	s	ELECT 100uF 20% 16V
C728	1-163-033-91	s	CERAMIC, CHIP 0.022uF 50V
C729	1-163-033-91	s	CERAMIC, CHIP 0.022uF 50V
C730	1-126-933-11	s	ELECT 100uF 20% 16V
C731	1-163-033-91	s	CERAMIC, CHIP 0.022uF 50V
C732	1-126-933-11	s	ELECT 100uF 20% 16V
CN1	1-506-468-11	o	CONNECTOR 3P, MALE
CN101	1-506-468-11	o	CONNECTOR 3P, MALE
CN110	1-573-600-21	s	CONNECTOR, PHEC 100P, MALE
CN201	1-506-468-11	o	CONNECTOR 3P, MALE
CN301	1-506-468-11	o	CONNECTOR 3P, MALE
D701	8-719-123-82	s	DIODE 1SS303-T1
D702	8-719-123-82	s	DIODE 1SS303-T1
D703	8-719-123-85	s	DIODE 1SS304
D704	8-719-123-85	s	DIODE 1SS304
IC1	1-810-336-11	s	HIC BP-025
IC2	1-810-335-11	s	HIC BP-024
IC101	1-810-336-11	s	HIC BP-025
IC102	1-810-335-11	s	HIC BP-024
IC201	1-810-336-11	s	HIC BP-025
IC202	1-810-335-11	s	HIC BP-024
IC301	1-810-336-11	s	HIC BP-025
IC302	1-810-335-11	s	HIC BP-024
IC501	8-759-009-10	s	IC MC14069UBF
IC502	8-759-009-10	s	IC MC14069UBF
IC503	8-759-009-10	s	IC MC14069UBF
IC701	8-759-182-84	s	IC PQ05SZ5U
IC702	8-759-189-43	s	IC AN77L05-TA
IC703	8-759-168-20	s	IC TA78L09S
IC704	8-759-168-20	s	IC TA78L09S
IC705	8-759-822-95	s	IC L79M05T-FA
IC706	8-759-700-65	s	IC NJM79L05A
IC707	8-759-700-68	s	IC NJM79L09A
IC708	8-759-700-68	s	IC NJM79L09A
L1-5	1-410-482-31	s	INDUCTOR 100uH
L101-105	1-410-482-31	s	INDUCTOR 100uH
L201-205	1-410-482-31	s	INDUCTOR 100uH
L301-305	1-410-482-31	s	INDUCTOR 100uH
L603	1-412-533-21	s	INDUCTOR 47uH
L701	1-412-533-21	s	INDUCTOR 47uH
L702	1-412-533-21	s	INDUCTOR 47uH
L703	1-412-533-21	s	INDUCTOR 47uH
L704	1-412-533-21	s	INDUCTOR 47uH
Q1	8-729-117-72	s	TRANSISTOR 2SC4178
Q2	8-729-117-72	s	TRANSISTOR 2SC4178
Q3	8-729-117-72	s	TRANSISTOR 2SC4178
Q102	8-729-117-72	s	TRANSISTOR 2SC4178
Q103	8-729-117-72	s	TRANSISTOR 2SC4178
Q201	8-729-117-72	s	TRANSISTOR 2SC4178
Q202	8-729-117-72	s	TRANSISTOR 2SC4178
Q203	8-729-117-72	s	TRANSISTOR 2SC4178
Q302	8-729-117-72	s	TRANSISTOR 2SC4178
Q303	8-729-117-72	s	TRANSISTOR 2SC4178
Q501	8-729-209-06	s	TRANSISTOR 2SC4213-A

Note: In this list * marked parts are design changed.
Refer to pages 18-29 to 18-31 for applicable serial numbers.

(RP-70BP BOARD(for UVW-1400P, PAL))

Ref. No. or Q'ty	Part No.	SP	Description
Q609	8-729-905-18	s	TRANSISTOR DTC144EU
Q610	8-729-140-63	s	TRANSISTOR 2SA1611-M5M6
Q611	8-729-022-00	s	TRANSISTOR 2SB1416-R(TA)
Q612	8-729-117-32	s	TRANSISTOR 2SC4177
Q613	8-729-159-65	s	TRANSISTOR 2SD596-DV5
Q614	8-729-159-65	s	TRANSISTOR 2SD596-DV5
Q615	8-729-140-63	s	TRANSISTOR 2SA1611-M5M6
Q616	8-729-209-06	s	TRANSISTOR 2SC4213-A
Q617	8-729-209-06	s	TRANSISTOR 2SC4213-A
R1	1-216-041-00	s	METAL, CHIP 470 5% 1/10W
R2	1-216-624-11	s	METAL, CHIP 75 0.5% 1/10W
R4	1-216-001-00	s	METAL, CHIP 10 5% 1/10W
R5	1-216-047-91	s	METAL, CHIP 820 5% 1/10W
R6	1-216-047-91	s	METAL, CHIP 820 5% 1/10W
R7	1-216-053-00	s	METAL, CHIP 1.5k 5% 1/10W
R8	1-216-009-00	s	METAL, CHIP 22 5% 1/10W
R9	1-216-055-00	s	METAL, CHIP 1.8k 5% 1/10W
R10	1-216-073-00	s	METAL, CHIP 10k 5% 1/10W
R11	1-216-009-00	s	METAL, CHIP 22 5% 1/10W
R12	1-216-057-00	s	METAL, CHIP 2.2k 5% 1/10W
R13	1-216-001-00	s	METAL, CHIP 10 5% 1/10W
R16	1-216-001-00	s	METAL, CHIP 10 5% 1/10W
R18	1-216-001-00	s	METAL, CHIP 10 5% 1/10W
R19	1-208-822-11	s	METAL, CHIP 47k 0.5% 1/10W
R21	1-208-822-11	s	METAL, CHIP 47k 0.5% 1/10W
R22	1-216-625-11	s	METAL, CHIP 82 0.5% 1/10W
R106	1-216-047-91	s	METAL, CHIP 820 5% 1/10W
R107	1-216-053-00	s	METAL, CHIP 1.5k 5% 1/10W
R108	1-216-009-00	s	METAL, CHIP 22 5% 1/10W
R109	1-216-055-00	s	METAL, CHIP 1.8k 5% 1/10W
R110	1-216-073-00	s	METAL, CHIP 10k 5% 1/10W
R111	1-216-009-00	s	METAL, CHIP 22 5% 1/10W
R112	1-216-057-00	s	METAL, CHIP 2.2k 5% 1/10W
R113	1-216-001-00	s	METAL, CHIP 10 5% 1/10W
R116	1-216-001-00	s	METAL, CHIP 10 5% 1/10W
R118	1-216-001-00	s	METAL, CHIP 10 5% 1/10W
R119	1-208-822-11	s	METAL, CHIP 47k 0.5% 1/10W
R121	1-208-822-11	s	METAL, CHIP 47k 0.5% 1/10W
R122	1-216-625-11	s	METAL, CHIP 82 0.5% 1/10W
R201	1-216-041-00	s	METAL, CHIP 470 5% 1/10W
R202	1-216-624-11	s	METAL, CHIP 75 0.5% 1/10W
R204	1-216-001-00	s	METAL, CHIP 10 5% 1/10W
R205	1-216-047-91	s	METAL, CHIP 820 5% 1/10W
R206	1-216-047-91	s	METAL, CHIP 820 5% 1/10W
R207	1-216-053-00	s	METAL, CHIP 1.5k 5% 1/10W
R208	1-216-009-00	s	METAL, CHIP 22 5% 1/10W
R209	1-216-055-00	s	METAL, CHIP 1.8k 5% 1/10W
R210	1-216-073-00	s	METAL, CHIP 10k 5% 1/10W
R211	1-216-009-00	s	METAL, CHIP 22 5% 1/10W
R212	1-216-057-00	s	METAL, CHIP 2.2k 5% 1/10W
R213	1-216-001-00	s	METAL, CHIP 10 5% 1/10W
R216	1-216-001-00	s	METAL, CHIP 10 5% 1/10W
R218	1-216-001-00	s	METAL, CHIP 10 5% 1/10W
R219	1-208-822-11	s	METAL, CHIP 47k 0.5% 1/10W
R221	1-216-689-11	s	METAL, CHIP 39k 0.5% 1/10W
R222	1-216-625-11	s	METAL, CHIP 82 0.5% 1/10W
R306	1-216-047-91	s	METAL, CHIP 820 5% 1/10W
R307	1-216-053-00	s	METAL, CHIP 1.5k 5% 1/10W
R308	1-216-009-00	s	METAL, CHIP 22 5% 1/10W

(RP-70BP BOARD(for UVW-1400P, PAL))

Ref. No. or Q'ty	Part No.	SP	Description
R309	1-216-055-00	s	METAL, CHIP 1.8k 5% 1/10W
R310	1-216-073-00	s	METAL, CHIP 10k 5% 1/10W
R311	1-216-009-00	s	METAL, CHIP 22 5% 1/10W
R312	1-216-057-00	s	METAL, CHIP 2.2k 5% 1/10W
R313	1-216-001-00	s	METAL, CHIP 10 5% 1/10W
R316	1-216-001-00	s	METAL, CHIP 10 5% 1/10W
R318	1-216-001-00	s	METAL, CHIP 10 5% 1/10W
R319	1-208-822-11	s	METAL, CHIP 47k 0.5% 1/10W
R321	1-216-689-11	s	METAL, CHIP 39k 0.5% 1/10W
R322	1-216-625-11	s	METAL, CHIP 82 0.5% 1/10W
R501	1-216-073-00	s	METAL, CHIP 10k 5% 1/10W
R502	1-216-049-91	s	METAL, CHIP 1k 5% 1/10W
R503	1-216-073-00	s	METAL, CHIP 10k 5% 1/10W
R504	1-216-049-91	s	METAL, CHIP 1k 5% 1/10W
R505	1-216-049-91	s	METAL, CHIP 1k 5% 1/10W
R506	1-216-081-00	s	METAL, CHIP 22k 5% 1/10W
R507	1-216-081-00	s	METAL, CHIP 22k 5% 1/10W
R508	1-216-081-00	s	METAL, CHIP 22k 5% 1/10W
R509	1-216-073-00	s	METAL, CHIP 10k 5% 1/10W
R510	1-216-049-91	s	METAL, CHIP 1k 5% 1/10W
R511	1-216-049-91	s	METAL, CHIP 1k 5% 1/10W
R512	1-216-073-00	s	METAL, CHIP 10k 5% 1/10W
R513	1-216-049-91	s	METAL, CHIP 1k 5% 1/10W
R514	1-216-073-00	s	METAL, CHIP 10k 5% 1/10W
R515	1-216-049-91	s	METAL, CHIP 1k 5% 1/10W
R516	1-216-049-91	s	METAL, CHIP 1k 5% 1/10W
R517	1-216-049-91	s	METAL, CHIP 1k 5% 1/10W
R518	1-216-073-00	s	METAL, CHIP 10k 5% 1/10W
R519	1-216-073-00	s	METAL, CHIP 10k 5% 1/10W
R631	1-216-085-00	s	METAL, CHIP 33k 5% 1/10W
R632	1-216-065-00	s	METAL, CHIP 4.7k 5% 1/10W
R633	1-216-051-00	s	METAL, CHIP 1.2k 5% 1/10W
R634	1-216-071-00	s	METAL, CHIP 8.2k 5% 1/10W
R635	1-216-081-00	s	METAL, CHIP 22k 5% 1/10W
R636	1-216-093-00	s	METAL, CHIP 68k 5% 1/10W
R637	1-216-093-00	s	METAL, CHIP 68k 5% 1/10W
R639	1-216-073-00	s	METAL, CHIP 10k 5% 1/10W
R640	1-216-077-00	s	METAL, CHIP 15k 5% 1/10W
R641	1-216-057-00	s	METAL, CHIP 2.2k 5% 1/10W
R642	1-216-057-00	s	METAL, CHIP 2.2k 5% 1/10W
RV1	1-241-783-11	s	RES, ADJ METAL 2.2k
RV2	1-241-762-11	s	RES, ADJ METAL 2.2k
RV101	1-241-783-11	s	RES, ADJ METAL 2.2k
RV102	1-241-762-11	s	RES, ADJ METAL 2.2k
RV201	1-241-783-11	s	RES, ADJ METAL 2.2k
RV202	1-241-762-11	s	RES, ADJ METAL 2.2k
RV301	1-241-783-11	s	RES, ADJ METAL 2.2k
RV302	1-241-762-11	s	RES, ADJ METAL 2.2k
S1	1-553-977-00	s	SWITCH, SLIDE
S101	1-553-977-00	s	SWITCH, SLIDE
S201	1-553-977-00	s	SWITCH, SLIDE
S301	1-553-977-00	s	SWITCH, SLIDE
T1	1-423-659-11	s	TRANSFORMER, RF OUTPUT
T2	1-423-658-11	s	TRANSFORMER, RF INPUT
T101	1-423-659-11	s	TRANSFORMER, RF OUTPUT
T102	1-423-658-11	s	TRANSFORMER, RF INPUT
T201	1-423-659-11	s	TRANSFORMER, RF OUTPUT
T202	1-423-658-11	s	TRANSFORMER, RF INPUT

Note: In this list * marked parts are design changed.
Refer to pages 18-29 to 18-31 for applicable serial numbers.

(RP-70BP BOARD(for UVW-1400P, PAL))

Ref. No. or Q'ty	Part No.	SP	Description	
T301	1-423-659-11	s	TRANSFORMER, RF OUTPUT	
T302	1-423-658-11	s	TRANSFORMER, RF INPUT	
T603	1-424-511-11	s	TRANSFORMER, FE	

SE-207 BOARD

Ref. No. or Q'ty	Part No.	SP	Description	

Two SE-207 boards are used in UVW-1400/1400P/1200/1200P.
One board has the following parts.

*1pc	1-648-923-11	o	PRINTED CIRCUIT BOARD, SE-207	*31
	1-648-923-12	o	PRINTED CIRCUIT BOARD, SE-207	*32
CN950	1-565-876-11	o	CONNECTOR 4P, MALE	
PH1	8-749-924-54	s	PHOTO-INTERRUPTER GP1A30R	
R1	1-249-408-11	s	CARBON 180 5% 1/4W	

SS-53A BOARD

Ref. No. or Q'ty	Part No.	SP	Description	
1pc	A-8275-573-A	o	MOUNTED CIRCUIT BOARD, SS-53A	
1pc	3-179-084-01	s	LEVER (R), PC BOARD	
1pc	3-179-085-01	s	LEVER (L), PC BOARD	
C1	1-135-076-21	s	TANTALUM, CHIP 1uF 10% 35V	
C2	1-163-033-91	s	CERAMIC, CHIP 0.022uF 50V	
C5-16	1-163-033-91	s	CERAMIC, CHIP 0.022uF 50V	
*C17	1-163-037-11	s	CERAMIC, CHIP 0.022uF 10% 25V	*30
*C18	1-163-037-11	s	CERAMIC, CHIP 0.022uF 10% 25V	*30
C19	1-163-033-91	s	CERAMIC, CHIP 0.022uF 50V	
C20	1-163-033-91	s	CERAMIC, CHIP 0.022uF 50V	
C21	1-163-033-91	s	CERAMIC, CHIP 0.022uF 50V	
C22	1-163-251-11	s	CERAMIC, CHIP 100pF 5% 50V	
C23	1-163-033-91	s	CERAMIC, CHIP 0.022uF 50V	
C24	1-126-924-11	s	ELECT 330uF 20% 10V	
C100	1-126-964-11	s	ELECT 10uF 20% 50V	
C101	1-126-964-11	s	ELECT 10uF 20% 50V	
C102	1-163-275-11	s	CERAMIC, CHIP 0.001uF 5% 50V	
C103	1-163-033-91	s	CERAMIC, CHIP 0.022uF 50V	
C104	1-163-033-91	s	CERAMIC, CHIP 0.022uF 50V	
C106	1-163-037-11	s	CERAMIC, CHIP 0.022uF 10% 25V	
C109	1-163-235-11	s	CERAMIC, CHIP 22pF 5% 50V	
C110	1-163-235-11	s	CERAMIC, CHIP 22pF 5% 50V	
C111	1-163-033-91	s	CERAMIC, CHIP 0.022uF 50V	
C112	1-164-232-11	s	CERAMIC, CHIP 0.01uF 10% 100V	
C113	1-163-251-11	s	CERAMIC, CHIP 100pF 5% 50V	
C114	1-126-924-11	s	ELECT 330uF 20% 10V	
C115	1-163-033-91	s	CERAMIC, CHIP 0.022uF 50V	
C116	1-163-033-91	s	CERAMIC, CHIP 0.022uF 50V	
C117	1-163-033-91	s	CERAMIC, CHIP 0.022uF 50V	
C200	1-135-076-21	s	TANTALUM, CHIP 1uF 10% 35V	
C201	1-163-809-11	s	CERAMIC, CHIP 0.047uF 10% 25V	
C202-209	1-163-275-11	s	CERAMIC, CHIP 0.001uF 5% 50V	
C210	1-163-237-11	s	CERAMIC, CHIP 27pF 5% 50V	
C211	1-163-033-91	s	CERAMIC, CHIP 0.022uF 50V	
C212	1-163-102-00	s	CERAMIC, CHIP 24pF 5% 50V	
C213	1-126-924-11	s	ELECT 330uF 20% 10V	
C214	1-163-275-11	s	CERAMIC, CHIP 0.001uF 5% 50V	
C215-230	1-163-033-91	s	CERAMIC, CHIP 0.022uF 50V	
C232	1-163-033-91	s	CERAMIC, CHIP 0.022uF 50V	
C233	1-163-037-11	s	CERAMIC, CHIP 0.022uF 10% 25V	
C234	1-163-037-11	s	CERAMIC, CHIP 0.022uF 10% 25V	
C235	1-163-037-11	s	CERAMIC, CHIP 0.022uF 10% 25V	
C236	1-163-037-11	s	CERAMIC, CHIP 0.022uF 10% 25V	
C237	1-164-232-11	s	CERAMIC, CHIP 0.01uF 10% 100V	
C238	1-164-232-11	s	CERAMIC, CHIP 0.01uF 10% 100V	
C239	1-163-033-91	s	CERAMIC, CHIP 0.022uF 50V	
C240	1-163-037-11	s	CERAMIC, CHIP 0.022uF 10% 25V	
C241	1-163-037-11	s	CERAMIC, CHIP 0.022uF 10% 25V	
C242	1-163-037-11	s	CERAMIC, CHIP 0.022uF 10% 25V	
C243	1-163-037-11	s	CERAMIC, CHIP 0.022uF 10% 25V	
C245	1-163-037-11	s	CERAMIC, CHIP 0.022uF 10% 25V	
C246	1-163-037-11	s	CERAMIC, CHIP 0.022uF 10% 25V	
C247	1-164-161-11	s	CERAMIC, CHIP 0.0022uF 10% 100V	
C248	1-164-161-11	s	CERAMIC, CHIP 0.0022uF 10% 100V	
C249	1-163-033-91	s	CERAMIC, CHIP 0.022uF 50V	
C251-269	1-163-033-91	s	CERAMIC, CHIP 0.022uF 50V	
C270-275	1-126-947-11	s	ELECT 47uF 20% 35V	
C276	1-163-989-11	s	CERAMIC, CHIP 0.033uF 10% 25V	

Note: In this list * marked parts are design changed.
Refer to pages 18-29 to 18-31 for applicable serial numbers.

(SS-53A BOARD)

Ref. No. or Q'ty	Part No.	SP	Description	
C277	1-163-033-91	s	CERAMIC, CHIP 0.022uF 50V	
C278	1-163-275-11	s	CERAMIC, CHIP 0.001uF 5% 50V	
C279	1-163-033-91	s	CERAMIC, CHIP 0.022uF 50V	
*C280	1-162-667-11	s	CERAMIC 10pF 5% 50V	*4
*C281	1-162-667-11	s	CERAMIC 10pF 5% 50V	*4
C400	1-163-033-91	s	CERAMIC, CHIP 0.022uF 50V	
C401	1-163-033-91	s	CERAMIC, CHIP 0.022uF 50V	
C402	1-163-809-11	s	CERAMIC, CHIP 0.047uF 10% 25V	
C403	1-163-033-91	s	CERAMIC, CHIP 0.022uF 50V	
C404	1-163-033-91	s	CERAMIC, CHIP 0.022uF 50V	
C405	1-163-275-11	s	CERAMIC, CHIP 0.001uF 5% 50V	
C406	1-163-235-11	s	CERAMIC, CHIP 22pF 5% 50V	
C407	1-163-809-11	s	CERAMIC, CHIP 0.047uF 10% 25V	
C408	1-163-033-91	s	CERAMIC, CHIP 0.022uF 50V	
C409	1-163-033-91	s	CERAMIC, CHIP 0.022uF 50V	
C410	1-163-275-11	s	CERAMIC, CHIP 0.001uF 5% 50V	
C411	1-163-033-91	s	CERAMIC, CHIP 0.022uF 50V	
C412	1-163-235-11	s	CERAMIC, CHIP 22pF 5% 50V	
CN1	1-506-484-11	s	CONNECTOR 5P, MALE	
CN2	1-506-481-11	s	CONNECTOR 2P, MALE	
CN3	1-560-369-00	o	CONNECTOR, ILG 8P, MALE	
CN107	1-573-782-21	o	CONNECTOR, PHEC 60P, MALE	
CN108	1-573-782-21	o	CONNECTOR, PHEC 60P, MALE	
CN109	1-573-782-21	o	CONNECTOR, PHEC 60P, MALE	
CNI4	1-526-660-21	o	SOCKET, IC 32P	
CNI212	1-526-660-21	o	SOCKET, IC 32P	
CV1	1-141-389-11	s	CAP, TRIMMER 50pF	
D100-105	8-719-941-23	s	DIODE DA204U	
D200-208	8-719-941-23	s	DIODE DA204U	
D210	8-719-938-72	s	DIODE SB01-05CP	
D211	8-719-941-23	s	DIODE DA204U	
D213	8-719-941-23	s	DIODE DA204U	
D214	8-719-941-23	s	DIODE DA204U	
D215	8-719-941-23	s	DIODE DA204U	
IC1	8-759-151-97	s	IC UPD70320GJ-8-5BG	
IC2	8-759-043-34	s	IC CXD8310M	
*IC3	8-759-507-51	s	IC MS6264CLL-10FC-EF	*33
	8-759-397-04	s	IC LC3564SM-10	*34
IC4	8-759-326-97	o	IC C1001-UVW1000SY-V200	
IC5	8-759-095-41	s	IC CXD8176AQ	
IC6	8-759-054-54	s	IC SRM2016M10	
IC7	8-759-369-92	s	IC M51958AFP600D	
IC9	8-759-926-77	s	IC SN74HC541ANS	
IC10	8-759-925-74	s	IC TC74HC04ANS	
IC11	8-759-925-85	s	IC SN74HC32ANS	
IC12	8-759-925-90	s	IC SN74HC74ANS	
IC13	8-759-031-69	s	IC MC1488M	
IC14	8-759-031-68	s	IC MC1489AM	
IC15	8-759-192-25	s	IC UPD6453GT-635-E2	
IC100	8-759-175-77	s	IC CXD8384Q	
IC101	8-759-100-96	s	IC UPC4558G2	
IC102	8-759-925-05	s	IC LM2903PS	
IC103	8-759-356-17	s	IC NJM4556AM-A-TE2	
IC200	8-759-300-71	s	IC HD14053BFP	
IC201	8-759-510-71	s	IC UPC358G2-E2	
IC202	8-759-192-26	s	IC HD6435348RA00F	

(SS-53A BOARD)

Ref. No. or Q'ty	Part No.	SP	Description	
IC203	8-759-925-76	s	IC SN74HC08ANS	
IC204	8-759-925-74	s	IC TC74HC04ANS	
IC206	8-759-916-23	s	IC SN74HC27N	
IC207	8-759-925-79	s	IC SN74HC11ANS	
IC208	8-759-926-11	s	IC SN74HC138ANS	
IC209	8-759-925-85	s	IC SN74HC32ANS	
IC210	8-759-925-76	s	IC SN74HC08ANS	
IC211	8-752-381-84	s	IC CXD1095Q	
IC212	8-759-391-83	s	IC C2001-UVW1000SV-V203	
*IC213	8-759-507-51	s	IC MS6264CLL-10FC-EF	*33
	8-759-397-04	s	IC LC3564SM-10	*34
IC214	8-759-300-71	s	IC HD14053BFP	
IC215	8-759-300-71	s	IC HD14053BFP	
IC216	8-759-925-05	s	IC LM2903PS	
IC217	8-759-239-23	s	IC TC74HC86AF	
IC219	8-752-343-05	s	IC CXD2202Q	
IC220	8-759-100-95	s	IC UPC324G2	
IC221	8-759-300-71	s	IC HD14053BFP	
IC222	8-759-100-95	s	IC UPC324G2	
IC223	8-759-106-02	s	IC UPC4570G2	
IC224	8-759-141-05	s	IC UPC4574G2	
IC225	8-759-106-02	s	IC UPC4570G2	
IC226	8-752-381-84	s	IC CXD1095Q	
IC227	8-759-913-99	s	IC MB88201-173N	
IC228	8-759-927-29	s	IC SN74HCU04NS	
IC229	8-759-977-80	s	IC MB88342PF	
IC230	8-759-925-05	s	IC LM2903PS	
IC231	8-759-106-02	s	IC UPC4570G2	
IC232	8-759-925-05	s	IC LM2903PS	
IC233	8-759-106-02	s	IC UPC4570G2	
L1	1-408-411-00	s	INDUCTOR 15uH	
L200	1-412-533-21	s	INDUCTOR 47uH	
L201	1-412-533-21	s	INDUCTOR 47uH	
PS1	⚠ 1-532-637-00	s	LINK, IC 1.0A	
PS2	⚠ 1-532-637-00	s	LINK, IC 1.0A	
Q105	8-729-905-12	s	TRANSISTOR DTA144EU	
Q106	8-729-422-44	s	TRANSISTOR 2SK663	
Q107	8-729-905-12	s	TRANSISTOR DTA144EU	
Q108	8-729-422-44	s	TRANSISTOR 2SK663	
Q204-209	8-729-905-18	s	TRANSISTOR DTC144EU	
Q210	8-729-209-06	s	TRANSISTOR 2SC4213-A	
Q211	8-729-209-06	s	TRANSISTOR 2SC4213-A	
R1	1-216-073-00	s	METAL, CHIP 10k 5% 1/10W	
R4	1-216-097-91	s	METAL, CHIP 100k 5% 1/10W	
R7	1-216-097-91	s	METAL, CHIP 100k 5% 1/10W	
R9	1-216-097-91	s	METAL, CHIP 100k 5% 1/10W	
R11	1-216-089-91	s	METAL, CHIP 47k 5% 1/10W	
R12	1-216-097-91	s	METAL, CHIP 100k 5% 1/10W	
R14	1-216-097-91	s	METAL, CHIP 100k 5% 1/10W	
R24	1-216-089-91	s	METAL, CHIP 47k 5% 1/10W	
R26	1-208-817-11	s	METAL, CHIP 30k 0.5% 1/10W	
R27	1-208-811-11	s	METAL, CHIP 16k 0.5% 1/10W	
R31	1-216-089-91	s	METAL, CHIP 47k 5% 1/10W	
R33	1-216-089-91	s	METAL, CHIP 47k 5% 1/10W	
R35	1-216-089-91	s	METAL, CHIP 47k 5% 1/10W	
R36-41	1-216-073-00	s	METAL, CHIP 10k 5% 1/10W	
R43	1-216-089-91	s	METAL, CHIP 47k 5% 1/10W	

Note: In this list * marked parts are design changed.
Refer to pages 18-29 to 18-31 for applicable serial numbers.

(SS-53A BOARD)

Ref. No. or Q'ty	Part No.	SP	Description	
R45	1-216-089-91	s	METAL, CHIP 47k 5% 1/10W	
R47	1-216-089-91	s	METAL, CHIP 47k 5% 1/10W	
R49	1-216-089-91	s	METAL, CHIP 47k 5% 1/10W	
R51	1-216-073-00	s	METAL, CHIP 10k 5% 1/10W	
R55	1-216-025-91	s	METAL, CHIP 100 5% 1/10W	
R56	1-216-089-91	s	METAL, CHIP 47k 5% 1/10W	
R57	1-216-089-91	s	METAL, CHIP 47k 5% 1/10W	
R58	1-216-089-91	s	METAL, CHIP 47k 5% 1/10W	
*R59	1-216-077-00	s	METAL, CHIP 15k 5% 1/10W	*22
*R60	1-216-077-00	s	METAL, CHIP 15k 5% 1/10W	*23
R61	1-216-089-91	s	METAL, CHIP 47k 5% 1/10W	
R62	1-216-089-91	s	METAL, CHIP 47k 5% 1/10W	
R63	1-216-049-91	s	METAL, CHIP 1k 5% 1/10W	
R64	1-216-049-91	s	METAL, CHIP 1k 5% 1/10W	
R65	1-216-097-91	s	METAL, CHIP 100k 5% 1/10W	
R66	1-216-097-91	s	METAL, CHIP 100k 5% 1/10W	
R67	1-216-049-91	s	METAL, CHIP 1k 5% 1/10W	
R68	1-216-049-91	s	METAL, CHIP 1k 5% 1/10W	
R69	1-216-049-91	s	METAL, CHIP 1k 5% 1/10W	
R100	1-216-663-11	s	METAL, CHIP 3.3k 0.5% 1/10W	
R101	1-216-648-11	s	METAL, CHIP 750 0.5% 1/10W	
R102	1-208-822-11	s	METAL, CHIP 47k 0.5% 1/10W	
R103	1-208-822-11	s	METAL, CHIP 47k 0.5% 1/10W	
R104	1-216-659-11	s	METAL, CHIP 2.2k 0.5% 1/10W	
R105	1-216-659-11	s	METAL, CHIP 2.2k 0.5% 1/10W	
R106	1-216-699-11	s	METAL, CHIP 100k 0.5% 1/10W	
R107	1-216-699-11	s	METAL, CHIP 100k 0.5% 1/10W	
R108	1-216-065-00	s	METAL, CHIP 4.7k 5% 1/10W	
R109	1-216-097-91	s	METAL, CHIP 100k 5% 1/10W	
R110	1-216-067-00	s	METAL, CHIP 5.6k 5% 1/10W	
R111	1-216-065-00	s	METAL, CHIP 4.7k 5% 1/10W	
R112	1-216-025-91	s	METAL, CHIP 100 5% 1/10W	
R128	1-216-057-00	s	METAL, CHIP 2.2k 5% 1/10W	
R129	1-216-065-00	s	METAL, CHIP 4.7k 5% 1/10W	
R130	1-216-097-91	s	METAL, CHIP 100k 5% 1/10W	
R131	1-216-037-00	s	METAL, CHIP 330 5% 1/10W	
R132	1-216-121-91	s	METAL, CHIP 1M 5% 1/10W	
R133	1-216-065-00	s	METAL, CHIP 4.7k 5% 1/10W	
R134	1-216-065-00	s	METAL, CHIP 4.7k 5% 1/10W	
R135	1-216-081-00	s	METAL, CHIP 22k 5% 1/10W	
R136	1-216-049-91	s	METAL, CHIP 1k 5% 1/10W	
R137	1-216-121-91	s	METAL, CHIP 1M 5% 1/10W	
R138	1-216-121-91	s	METAL, CHIP 1M 5% 1/10W	
R139	1-216-061-00	s	METAL, CHIP 3.3k 5% 1/10W	
R140	1-216-071-00	s	METAL, CHIP 8.2k 5% 1/10W	
R141	1-216-624-11	s	METAL, CHIP 75 0.5% 1/10W	
R142	1-216-073-00	s	METAL, CHIP 10k 5% 1/10W	
R145	1-216-073-00	s	METAL, CHIP 10k 5% 1/10W	
R146	1-216-025-91	s	METAL, CHIP 100 5% 1/10W	
R149	1-216-081-00	s	METAL, CHIP 22k 5% 1/10W	
R150	1-216-121-91	s	METAL, CHIP 1M 5% 1/10W	
R151	1-216-121-91	s	METAL, CHIP 1M 5% 1/10W	
R200	1-216-699-11	s	METAL, CHIP 100k 0.5% 1/10W	
R201	1-216-699-11	s	METAL, CHIP 100k 0.5% 1/10W	
R202	1-216-687-11	s	METAL, CHIP 33k 0.5% 1/10W	
R203	1-218-764-11	s	METAL, CHIP 330k 0.5% 1/10W	
R204-213	1-216-073-00	s	METAL, CHIP 10k 5% 1/10W	
R214	1-216-097-91	s	METAL, CHIP 100k 5% 1/10W	
R215	1-216-089-91	s	METAL, CHIP 47k 5% 1/10W	

(SS-53A BOARD)

Ref. No. or Q'ty	Part No.	SP	Description	
R216	1-216-089-91	s	METAL, CHIP 47k 5% 1/10W	
R217	1-216-089-91	s	METAL, CHIP 47k 5% 1/10W	
R218	1-216-089-91	s	METAL, CHIP 47k 5% 1/10W	
R219	1-216-057-00	s	METAL, CHIP 2.2k 5% 1/10W	
R220	1-208-817-11	s	METAL, CHIP 30k 0.5% 1/10W	
R221	1-216-665-11	s	METAL, CHIP 3.9k 0.5% 1/10W	
R222	1-216-648-11	s	METAL, CHIP 750 0.5% 1/10W	
R223	1-216-699-11	s	METAL, CHIP 100k 0.5% 1/10W	
R224	1-208-806-11	s	METAL, CHIP 10k 0.5% 1/10W	
R225	1-218-764-11	s	METAL, CHIP 330k 0.5% 1/10W	
R227	1-216-049-91	s	METAL, CHIP 1k 5% 1/10W	
R228	1-216-049-91	s	METAL, CHIP 1k 5% 1/10W	
R229	1-216-025-91	s	METAL, CHIP 100 5% 1/10W	
R231	1-216-049-91	s	METAL, CHIP 1k 5% 1/10W	
R232	1-216-049-91	s	METAL, CHIP 1k 5% 1/10W	
R233	1-216-049-91	s	METAL, CHIP 1k 5% 1/10W	
R234	1-216-049-91	s	METAL, CHIP 1k 5% 1/10W	
R235	1-216-073-00	s	METAL, CHIP 10k 5% 1/10W	
R236	1-216-025-91	s	METAL, CHIP 100 5% 1/10W	
R237	1-216-025-91	s	METAL, CHIP 100 5% 1/10W	
R238	1-216-049-91	s	METAL, CHIP 1k 5% 1/10W	
R239	1-216-049-91	s	METAL, CHIP 1k 5% 1/10W	
R240	1-216-049-91	s	METAL, CHIP 1k 5% 1/10W	
R241	1-216-025-91	s	METAL, CHIP 100 5% 1/10W	
R242	1-216-049-91	s	METAL, CHIP 1k 5% 1/10W	
R243	1-216-057-00	s	METAL, CHIP 2.2k 5% 1/10W	
R244	1-216-057-00	s	METAL, CHIP 2.2k 5% 1/10W	
R245	1-216-089-91	s	METAL, CHIP 47k 5% 1/10W	
R254	1-216-089-91	s	METAL, CHIP 47k 5% 1/10W	
R255	1-208-806-11	s	METAL, CHIP 10k 0.5% 1/10W	
R256	1-208-814-11	s	METAL, CHIP 22k 0.5% 1/10W	
R257	1-208-806-11	s	METAL, CHIP 10k 0.5% 1/10W	
R258	1-208-814-11	s	METAL, CHIP 22k 0.5% 1/10W	
R260	1-216-097-91	s	METAL, CHIP 100k 5% 1/10W	
R261	1-216-073-00	s	METAL, CHIP 10k 5% 1/10W	
R262	1-216-089-91	s	METAL, CHIP 47k 5% 1/10W	
R263	1-216-089-91	s	METAL, CHIP 47k 5% 1/10W	
*R264	1-216-089-91	s	METAL, CHIP 47k 5% 1/10W	*10
	1-216-105-91	s	METAL, CHIP 220k 5% 1/10W	*11
*R265	1-216-089-91	s	METAL, CHIP 47k 5% 1/10W	*10
	1-216-105-91	s	METAL, CHIP 220k 5% 1/10W	*11
R268	1-216-057-00	s	METAL, CHIP 2.2k 5% 1/10W	
R269	1-216-057-00	s	METAL, CHIP 2.2k 5% 1/10W	
R275	1-216-073-00	s	METAL, CHIP 10k 5% 1/10W	
R276	1-216-073-00	s	METAL, CHIP 10k 5% 1/10W	
R277	1-216-073-00	s	METAL, CHIP 10k 5% 1/10W	
R281	1-216-121-91	s	METAL, CHIP 1M 5% 1/10W	
R282	1-216-073-00	s	METAL, CHIP 10k 5% 1/10W	
R283	1-220-221-11	s	METAL, CHIP 100 5% 1/2W	
R284	1-216-025-91	s	METAL, CHIP 100 5% 1/10W	
R285	1-216-089-91	s	METAL, CHIP 47k 5% 1/10W	
R286	1-216-097-91	s	METAL, CHIP 100k 5% 1/10W	
R287	1-216-025-91	s	METAL, CHIP 100 5% 1/10W	
R288	1-216-025-91	s	METAL, CHIP 100 5% 1/10W	
R289	1-216-073-00	s	METAL, CHIP 10k 5% 1/10W	
R290	1-216-073-00	s	METAL, CHIP 10k 5% 1/10W	
R291	1-216-073-00	s	METAL, CHIP 10k 5% 1/10W	
R292	1-216-073-00	s	METAL, CHIP 10k 5% 1/10W	

Note: In this list * marked parts are design changed.
Refer to pages 18-29 to 18-31 for applicable serial numbers.

(SS-53A BOARD)

Ref. No. or Q'ty	Part No.	SP	Description
R294	1-216-073-00	s	METAL, CHIP 10k 5% 1/10W
R295	1-216-073-00	s	METAL, CHIP 10k 5% 1/10W
R297	1-216-025-91	s	METAL, CHIP 100 5% 1/10W
R298	1-216-109-00	s	METAL, CHIP 330k 5% 1/10W
R299	1-216-109-00	s	METAL, CHIP 330k 5% 1/10W
R300	1-216-025-91	s	METAL, CHIP 100 5% 1/10W
R302	1-216-025-91	s	METAL, CHIP 100 5% 1/10W
R303	1-216-057-00	s	METAL, CHIP 2.2k 5% 1/10W
R304	1-216-057-00	s	METAL, CHIP 2.2k 5% 1/10W
R306	1-216-025-91	s	METAL, CHIP 100 5% 1/10W
R307	1-216-121-91	s	METAL, CHIP 1M 5% 1/10W
R309	1-216-081-00	s	METAL, CHIP 22k 5% 1/10W
R310	1-216-081-00	s	METAL, CHIP 22k 5% 1/10W
R311	1-216-081-00	s	METAL, CHIP 22k 5% 1/10W
R312	1-216-049-91	s	METAL, CHIP 1k 5% 1/10W
R313	1-216-049-91	s	METAL, CHIP 1k 5% 1/10W
R314	1-216-049-91	s	METAL, CHIP 1k 5% 1/10W
R315	1-216-049-91	s	METAL, CHIP 1k 5% 1/10W
R316	1-216-085-00	s	METAL, CHIP 33k 5% 1/10W
R317	1-216-057-00	s	METAL, CHIP 2.2k 5% 1/10W
R318	1-216-085-00	s	METAL, CHIP 33k 5% 1/10W
R319	1-216-073-00	s	METAL, CHIP 10k 5% 1/10W
R320	1-216-085-00	s	METAL, CHIP 33k 5% 1/10W
R321	1-216-073-00	s	METAL, CHIP 10k 5% 1/10W
R322	1-216-085-00	s	METAL, CHIP 33k 5% 1/10W
R323	1-216-097-91	s	METAL, CHIP 100k 5% 1/10W
R324	1-216-073-00	s	METAL, CHIP 10k 5% 1/10W
R325	1-216-121-91	s	METAL, CHIP 1M 5% 1/10W
R326-331	1-216-089-91	s	METAL, CHIP 47k 5% 1/10W
R332	1-216-065-00	s	METAL, CHIP 4.7k 5% 1/10W
R333	1-216-061-00	s	METAL, CHIP 3.3k 5% 1/10W
R334	1-216-097-91	s	METAL, CHIP 100k 5% 1/10W
R335	1-216-097-91	s	METAL, CHIP 100k 5% 1/10W
R336	1-216-049-91	s	METAL, CHIP 1k 5% 1/10W
R337	1-216-049-91	s	METAL, CHIP 1k 5% 1/10W
R338	1-216-085-00	s	METAL, CHIP 33k 5% 1/10W
R339	1-216-057-00	s	METAL, CHIP 2.2k 5% 1/10W
R340	1-216-057-00	s	METAL, CHIP 2.2k 5% 1/10W
R341	1-216-061-00	s	METAL, CHIP 3.3k 5% 1/10W
R342	1-216-061-00	s	METAL, CHIP 3.3k 5% 1/10W
R343	1-216-121-91	s	METAL, CHIP 1M 5% 1/10W
R344	1-216-097-91	s	METAL, CHIP 100k 5% 1/10W
R345	1-216-085-00	s	METAL, CHIP 33k 5% 1/10W
R346-350	1-216-049-91	s	METAL, CHIP 1k 5% 1/10W
R351	1-216-121-91	s	METAL, CHIP 1M 5% 1/10W
R352	1-216-039-00	s	METAL, CHIP 390 5% 1/10W
R353-381	1-216-049-91	s	METAL, CHIP 1k 5% 1/10W
R382	1-216-073-00	s	METAL, CHIP 10k 5% 1/10W
R383	1-216-073-00	s	METAL, CHIP 10k 5% 1/10W
R385	1-216-089-91	s	METAL, CHIP 47k 5% 1/10W
R386	1-216-089-91	s	METAL, CHIP 47k 5% 1/10W
R387	1-216-049-91	s	METAL, CHIP 1k 5% 1/10W
R388	1-216-049-91	s	METAL, CHIP 1k 5% 1/10W
R389	1-216-049-91	s	METAL, CHIP 1k 5% 1/10W
R390	1-216-073-00	s	METAL, CHIP 10k 5% 1/10W
R391	1-216-089-91	s	METAL, CHIP 47k 5% 1/10W
R392	1-216-025-91	s	METAL, CHIP 100 5% 1/10W
R393	1-216-073-00	s	METAL, CHIP 10k 5% 1/10W
R394	1-216-073-00	s	METAL, CHIP 10k 5% 1/10W

(SS-53A BOARD)

Ref. No. or Q'ty	Part No.	SP	Description
R395	1-216-097-91	s	METAL, CHIP 100k 5% 1/10W
R396	1-216-057-00	s	METAL, CHIP 2.2k 5% 1/10W
R397	1-216-073-00	s	METAL, CHIP 10k 5% 1/10W
R398	1-216-073-00	s	METAL, CHIP 10k 5% 1/10W
R399	1-216-097-91	s	METAL, CHIP 100k 5% 1/10W
R400	1-208-822-11	s	METAL, CHIP 47k 0.5% 1/10W
R401	1-208-806-11	s	METAL, CHIP 10k 0.5% 1/10W
R402	1-208-806-11	s	METAL, CHIP 10k 0.5% 1/10W
R403	1-208-814-11	s	METAL, CHIP 22k 0.5% 1/10W
R404	1-208-814-11	s	METAL, CHIP 22k 0.5% 1/10W
R405	1-216-651-11	s	METAL, CHIP 1k 0.5% 1/10W
R406	1-208-806-11	s	METAL, CHIP 10k 0.5% 1/10W
R407	1-216-695-11	s	METAL, CHIP 68k 0.5% 1/10W
R408	1-216-695-11	s	METAL, CHIP 68k 0.5% 1/10W
R409	1-216-699-11	s	METAL, CHIP 100k 0.5% 1/10W
R410	1-216-687-11	s	METAL, CHIP 33k 0.5% 1/10W
R411	1-216-057-00	s	METAL, CHIP 2.2k 5% 1/10W
R412	1-208-822-11	s	METAL, CHIP 47k 0.5% 1/10W
R413	1-208-806-11	s	METAL, CHIP 10k 0.5% 1/10W
R414	1-208-806-11	s	METAL, CHIP 10k 0.5% 1/10W
R415	1-208-814-11	s	METAL, CHIP 22k 0.5% 1/10W
R416	1-208-814-11	s	METAL, CHIP 22k 0.5% 1/10W
R417	1-216-695-11	s	METAL, CHIP 68k 0.5% 1/10W
R418	1-216-695-11	s	METAL, CHIP 68k 0.5% 1/10W
R419	1-216-651-11	s	METAL, CHIP 1k 0.5% 1/10W
R420	1-208-806-11	s	METAL, CHIP 10k 0.5% 1/10W
R421	1-216-687-11	s	METAL, CHIP 33k 0.5% 1/10W
R422	1-216-699-11	s	METAL, CHIP 100k 0.5% 1/10W
R423	1-216-057-00	s	METAL, CHIP 2.2k 5% 1/10W
RB1	1-239-304-11	s	RESISTOR BLOCK, CHIP 2.2kx8
RB2	1-239-308-11	s	RESISTOR BLOCK, CHIP 47kx8
RB201	1-239-304-11	s	RESISTOR BLOCK, CHIP 2.2kx8
RB202	1-239-309-11	s	RESISTOR BLOCK, CHIP 100kx8
RB203	1-239-306-11	s	RESISTOR BLOCK, CHIP 10kx8
S1	1-692-535-11	s	SWITCH, DIP 4-CKT
S201	1-692-536-11	s	SWITCH, DIP 8-CKT
X1	1-579-930-12	s	RESONATOR, CERAMIC 16.00MHz
X101	1-579-993-21	s	CRYSTAL 13.50MHz
X200	1-579-996-21	s	RESONATOR, CERAMIC 20.00MHz

Note: In this list * marked parts are design changed.
Refer to pages 18-29 to 18-31 for applicable serial numbers.

TBC-28 BOARD(for NTSC)

Ref. No. or Q'ty	Part No.	SP	Description
1pc	A-8275-572-A	o	MOUNTED CIRCUIT BOARD, TBC-28
1pc	3-182-386-02	o	PLATE, SHIELD (L), CARD
1pc	7-621-759-45	s	SCREW, +PSW2.6x6
1pc	3-179-084-01	s	LEVER (R), PC BOARD
1pc	3-179-085-01	s	LEVER (L), PC BOARD
2pcs	1-750-484-11	s	BUS-BAR
C1	1-126-933-11	s	ELECT 100uF 20% 16V
C2	1-126-933-11	s	ELECT 100uF 20% 16V
C3	1-163-033-91	s	CERAMIC, CHIP 0.022uF 50V
C4	1-126-933-11	s	ELECT 100uF 20% 16V
C5	1-126-933-11	s	ELECT 100uF 20% 16V
C6	1-126-933-11	s	ELECT 100uF 20% 16V
C7	1-126-933-11	s	ELECT 100uF 20% 16V
C8	1-163-033-91	s	CERAMIC, CHIP 0.022uF 50V
C9	1-126-933-11	s	ELECT 100uF 20% 16V
C10	1-126-933-11	s	ELECT 100uF 20% 16V
C11	1-163-033-91	s	CERAMIC, CHIP 0.022uF 50V
C12	1-126-933-11	s	ELECT 100uF 20% 16V
C13	1-126-933-11	s	ELECT 100uF 20% 16V
C14	1-126-933-11	s	ELECT 100uF 20% 16V
C15	1-163-033-91	s	CERAMIC, CHIP 0.022uF 50V
C16	1-126-933-11	s	ELECT 100uF 20% 16V
C17	1-126-933-11	s	ELECT 100uF 20% 16V
C18	1-126-933-11	s	ELECT 100uF 20% 16V
C19	1-126-933-11	s	ELECT 100uF 20% 16V
C20	1-126-933-11	s	ELECT 100uF 20% 16V
C21	1-126-933-11	s	ELECT 100uF 20% 16V
C22	1-163-033-91	s	CERAMIC, CHIP 0.022uF 50V
C100	1-163-033-91	s	CERAMIC, CHIP 0.022uF 50V
C101	1-126-947-11	s	ELECT 47uF 20% 35V
C102	1-163-231-11	s	CERAMIC, CHIP 15pF 5% 50V
C103	1-163-231-11	s	CERAMIC, CHIP 15pF 5% 50V
C104	1-163-033-91	s	CERAMIC, CHIP 0.022uF 50V
C105	1-163-033-91	s	CERAMIC, CHIP 0.022uF 50V
C106	1-163-033-91	s	CERAMIC, CHIP 0.022uF 50V
C107	1-126-947-11	s	ELECT 47uF 20% 35V
C108	1-163-809-11	s	CERAMIC, CHIP 0.047uF 10% 25V
C109	1-124-903-11	s	ELECT 1uF 20% 50V
C110	1-131-353-00	s	TANTALUM 10uF 10% 35V
C111	1-163-239-11	s	CERAMIC, CHIP 33pF 5% 50V
C112	1-164-004-11	s	CERAMIC, CHIP 0.1uF 10% 25V
C113	1-126-934-11	s	ELECT 220uF 20% 16V
C114	1-126-947-11	s	ELECT 47uF 20% 35V
C115	1-163-033-91	s	CERAMIC, CHIP 0.022uF 50V
C116	1-163-033-91	s	CERAMIC, CHIP 0.022uF 50V
C117	1-126-947-11	s	ELECT 47uF 20% 35V
C118	1-126-933-11	s	ELECT 100uF 20% 16V
C200	1-163-033-91	s	CERAMIC, CHIP 0.022uF 50V
C201	1-126-947-11	s	ELECT 47uF 20% 35V
C202	1-163-231-11	s	CERAMIC, CHIP 15pF 5% 50V
C203	1-163-231-11	s	CERAMIC, CHIP 15pF 5% 50V
C204	1-163-033-91	s	CERAMIC, CHIP 0.022uF 50V
C205	1-163-033-91	s	CERAMIC, CHIP 0.022uF 50V
C206	1-163-033-91	s	CERAMIC, CHIP 0.022uF 50V
C207	1-126-947-11	s	ELECT 47uF 20% 35V
C208	1-163-809-11	s	CERAMIC, CHIP 0.047uF 10% 25V
C209	1-124-903-11	s	ELECT 1uF 20% 50V
C210	1-131-353-00	s	TANTALUM 10uF 10% 35V

(TBC-28 BOARD(for NTSC))

Ref. No. or Q'ty	Part No.	SP	Description	
C211	1-163-239-11	s	CERAMIC, CHIP 33pF 5% 50V	
C212	1-164-004-11	s	CERAMIC, CHIP 0.1uF 10% 25V	
C213	1-126-934-11	s	ELECT 220uF 20% 16V	
C214	1-126-947-11	s	ELECT 47uF 20% 35V	
C215	1-163-033-91	s	CERAMIC, CHIP 0.022uF 50V	
C216	1-163-033-91	s	CERAMIC, CHIP 0.022uF 50V	
C218	1-126-933-11	s	ELECT 100uF 20% 16V	
C300	1-126-947-11	s	ELECT 47uF 20% 35V	
C301	1-163-033-91	s	CERAMIC, CHIP 0.022uF 50V	
C302	1-163-251-11	s	CERAMIC, CHIP 100pF 5% 50V	
C303	1-163-033-91	s	CERAMIC, CHIP 0.022uF 50V	
C305	1-163-033-91	s	CERAMIC, CHIP 0.022uF 50V	
C306	1-163-251-11	s	CERAMIC, CHIP 100pF 5% 50V	
C307	1-163-133-00	s	CERAMIC, CHIP 470pF 5% 50V	
C308	1-163-263-11	s	CERAMIC, CHIP 330pF 5% 50V	
C309	1-126-947-11	s	ELECT 47uF 20% 35V	
C310	1-163-033-91	s	CERAMIC, CHIP 0.022uF 50V	
C311	1-126-947-11	s	ELECT 47uF 20% 35V	
C312-316	1-163-033-91	s	CERAMIC, CHIP 0.022uF 50V	
C317	1-126-964-11	s	ELECT 10uF 20% 50V	
C318	1-163-033-91	s	CERAMIC, CHIP 0.022uF 50V	
C319	1-163-033-91	s	CERAMIC, CHIP 0.022uF 50V	
C320	1-163-033-91	s	CERAMIC, CHIP 0.022uF 50V	
C321	1-163-251-11	s	CERAMIC, CHIP 100pF 5% 50V	
C322	1-163-133-00	s	CERAMIC, CHIP 470pF 5% 50V	
C324	1-163-033-91	s	CERAMIC, CHIP 0.022uF 50V	
C325	1-164-004-11	s	CERAMIC, CHIP 0.1uF 10% 25V	
C326	1-164-232-11	s	CERAMIC, CHIP 0.01uF 10% 100V	
C327	1-124-903-11	s	ELECT 1uF 20% 50V	
C328	1-163-033-91	s	CERAMIC, CHIP 0.022uF 50V	
C329	1-163-033-91	s	CERAMIC, CHIP 0.022uF 50V	
C330	1-164-004-11	s	CERAMIC, CHIP 0.1uF 10% 25V	
C331	1-124-903-11	s	ELECT 1uF 20% 50V	
C332	1-164-004-11	s	CERAMIC, CHIP 0.1uF 10% 25V	
C333	1-163-243-11	s	CERAMIC, CHIP 47pF 5% 50V	
C334	1-126-933-11	s	ELECT 100uF 20% 16V	
C335	1-163-033-91	s	CERAMIC, CHIP 0.022uF 50V	
C336	1-163-133-00	s	CERAMIC, CHIP 470pF 5% 50V	
C337	1-164-232-11	s	CERAMIC, CHIP 0.01uF 10% 100V	
C338	1-163-033-91	s	CERAMIC, CHIP 0.022uF 50V	
C339	1-163-251-11	s	CERAMIC, CHIP 100pF 5% 50V	
C340	1-163-033-91	s	CERAMIC, CHIP 0.022uF 50V	
C341	1-163-125-00	s	CERAMIC, CHIP 220pF 5% 50V	
C342	1-163-133-00	s	CERAMIC, CHIP 470pF 5% 50V	
C344	1-163-243-11	s	CERAMIC, CHIP 47pF 5% 50V	
*C345	1-163-251-11	s	CERAMIC, CHIP 100pF 5% 50V	*8
	1-163-247-11	s	CERAMIC, CHIP 68pF 5% 50V	*42
	1-163-243-11	s	CERAMIC, CHIP 47pF 5% 50V	*12
C347	1-164-004-11	s	CERAMIC, CHIP 0.1uF 10% 25V	
*C348	1-163-227-11	s	CERAMIC, CHIP 10pF 5% 50V	*9
*C349	1-163-227-11	s	CERAMIC, CHIP 10pF 5% 50V	*9
C350	1-126-933-11	s	ELECT 100uF 20% 16V	
C351	1-164-489-11	s	CERAMIC, CHIP 0.22uF 10% 16V	
C352	1-124-925-11	s	ELECT 2.2uF 20% 100V	
C353	1-124-925-11	s	ELECT 2.2uF 20% 100V	
*C354	1-163-120-00	s	CERAMIC, CHIP 130pF 5% 50V	*9
C355	1-163-243-11	s	CERAMIC, CHIP 47pF 5% 50V	
C356	1-163-243-11	s	CERAMIC, CHIP 47pF 5% 50V	

Note: In this list * marked parts are design changed.
Refer to pages 18-29 to 18-31 for applicable serial numbers.

(TBC-28 BOARD(for NTSC))

Ref. No. or Q'ty	Part No.	SP	Description	
C357	1-163-275-11	s	CERAMIC, CHIP 0.001uF 5% 50V	
C359	1-163-033-91	s	CERAMIC, CHIP 0.022uF 50V	
C360	1-126-947-11	s	ELECT 47uF 20% 35V	
C361	1-126-947-11	s	ELECT 47uF 20% 35V	
C362	1-163-033-91	s	CERAMIC, CHIP 0.022uF 50V	
C363	1-126-947-11	s	ELECT 47uF 20% 35V	
C364	1-163-033-91	s	CERAMIC, CHIP 0.022uF 50V	
C400	1-126-947-11	s	ELECT 47uF 20% 35V	
C401	1-163-033-91	s	CERAMIC, CHIP 0.022uF 50V	
C402	1-163-033-91	s	CERAMIC, CHIP 0.022uF 50V	
C404	1-163-033-91	s	CERAMIC, CHIP 0.022uF 50V	
C405	1-126-947-11	s	ELECT 47uF 20% 35V	
C406	1-163-033-91	s	CERAMIC, CHIP 0.022uF 50V	
C407	1-163-222-11	s	CERAMIC, CHIP 5pF 50V	
C408	1-163-102-00	s	CERAMIC, CHIP 24pF 5% 50V	
C409	1-163-243-11	s	CERAMIC, CHIP 47pF 5% 50V	
C410	1-126-947-11	s	ELECT 47uF 20% 35V	
C411	1-163-106-00	s	CERAMIC, CHIP 36pF 5% 50V	
C412	1-163-120-00	s	CERAMIC, CHIP 130pF 5% 50V	
C413	1-163-263-11	s	CERAMIC, CHIP 330pF 5% 50V	
C414-419	1-163-033-91	s	CERAMIC, CHIP 0.022uF 50V	
C420	1-163-239-11	s	CERAMIC, CHIP 33pF 5% 50V	
C421	1-163-125-00	s	CERAMIC, CHIP 220pF 5% 50V	
C423	1-164-004-11	s	CERAMIC, CHIP 0.1uF 10% 25V	
C424	1-164-004-11	s	CERAMIC, CHIP 0.1uF 10% 25V	
C425	1-164-232-11	s	CERAMIC, CHIP 0.01uF 10% 100V	
C426	1-124-903-11	s	ELECT 1uF 20% 50V	
C427	1-163-033-91	s	CERAMIC, CHIP 0.022uF 50V	
C428	1-163-033-91	s	CERAMIC, CHIP 0.022uF 50V	
C429	1-124-903-11	s	ELECT 1uF 20% 50V	
C430	1-163-033-91	s	CERAMIC, CHIP 0.022uF 50V	
C431	1-164-004-11	s	CERAMIC, CHIP 0.1uF 10% 25V	
C432	1-164-232-11	s	CERAMIC, CHIP 0.01uF 10% 100V	
C433	1-163-263-11	s	CERAMIC, CHIP 330pF 5% 50V	
C434	1-163-243-11	s	CERAMIC, CHIP 47pF 5% 50V	
C435	1-126-933-11	s	ELECT 100uF 20% 16V	
C436	1-163-033-91	s	CERAMIC, CHIP 0.022uF 50V	
C437	1-163-133-00	s	CERAMIC, CHIP 470pF 5% 50V	
C438	1-164-232-11	s	CERAMIC, CHIP 0.01uF 10% 100V	
C439	1-163-033-91	s	CERAMIC, CHIP 0.022uF 50V	
C440	1-163-251-11	s	CERAMIC, CHIP 100pF 5% 50V	
C441	1-163-033-91	s	CERAMIC, CHIP 0.022uF 50V	
C442	1-163-263-11	s	CERAMIC, CHIP 330pF 5% 50V	
C443	1-163-125-00	s	CERAMIC, CHIP 220pF 5% 50V	
C445	1-163-243-11	s	CERAMIC, CHIP 47pF 5% 50V	
*C446	1-163-251-11	s	CERAMIC, CHIP 100pF 5% 50V	*8
	1-163-247-11	s	CERAMIC, CHIP 68pF 5% 50V	*42
	1-163-243-11	s	CERAMIC, CHIP 47pF 5% 50V	*12
C447	1-164-004-11	s	CERAMIC, CHIP 0.1uF 10% 25V	
C448	1-126-933-11	s	ELECT 100uF 20% 16V	
C449	1-164-489-11	s	CERAMIC, CHIP 0.22uF 10% 16V	
C450	1-124-925-11	s	ELECT 2.2uF 20% 100V	
C451	1-124-925-11	s	ELECT 2.2uF 20% 100V	
C452	1-163-275-11	s	CERAMIC, CHIP 0.001uF 5% 50V	
C454	1-163-033-91	s	CERAMIC, CHIP 0.022uF 50V	
C455	1-126-947-11	s	ELECT 47uF 20% 35V	
C456	1-126-947-11	s	ELECT 47uF 20% 35V	
C457	1-163-033-91	s	CERAMIC, CHIP 0.022uF 50V	

(TBC-28 BOARD(for NTSC))

Ref. No. or Q'ty	Part No.	SP	Description	
C458	1-126-947-11	s	ELECT 47uF 20% 35V	
C459	1-163-033-91	s	CERAMIC, CHIP 0.022uF 50V	
C461	1-163-033-91	s	CERAMIC, CHIP 0.022uF 50V	
C462	1-163-102-00	s	CERAMIC, CHIP 24pF 5% 50V	
*C463	1-163-227-11	s	CERAMIC, CHIP 10pF 5% 50V	*9
*C464	1-163-227-11	s	CERAMIC, CHIP 10pF 5% 50V	*9
*C465	1-163-121-00	s	CERAMIC, CHIP 150pF 5% 50V	*9
C501	1-163-125-00	s	CERAMIC, CHIP 220pF 5% 50V	
C502	1-163-125-00	s	CERAMIC, CHIP 220pF 5% 50V	
C503	1-163-033-91	s	CERAMIC, CHIP 0.022uF 50V	
C504	1-163-033-91	s	CERAMIC, CHIP 0.022uF 50V	
C505	1-163-033-91	s	CERAMIC, CHIP 0.022uF 50V	
C506	1-163-033-91	s	CERAMIC, CHIP 0.022uF 50V	
C507	1-126-947-11	s	ELECT 47uF 20% 35V	
C508	1-163-033-91	s	CERAMIC, CHIP 0.022uF 50V	
C509	1-163-033-91	s	CERAMIC, CHIP 0.022uF 50V	
C510	1-163-033-91	s	CERAMIC, CHIP 0.022uF 50V	
C511	1-163-033-91	s	CERAMIC, CHIP 0.022uF 50V	
C512	1-163-125-00	s	CERAMIC, CHIP 220pF 5% 50V	
C513	1-163-033-91	s	CERAMIC, CHIP 0.022uF 50V	
C514	1-163-251-11	s	CERAMIC, CHIP 100pF 5% 50V	
C516	1-163-033-91	s	CERAMIC, CHIP 0.022uF 50V	
C517	1-126-947-11	s	ELECT 47uF 20% 35V	
C524	1-164-004-11	s	CERAMIC, CHIP 0.1uF 10% 25V	
C525	1-164-004-11	s	CERAMIC, CHIP 0.1uF 10% 25V	
C526	1-164-004-11	s	CERAMIC, CHIP 0.1uF 10% 25V	
C528	1-164-004-11	s	CERAMIC, CHIP 0.1uF 10% 25V	
C529	1-163-033-91	s	CERAMIC, CHIP 0.022uF 50V	
C530	1-164-004-11	s	CERAMIC, CHIP 0.1uF 10% 25V	
C531	1-163-033-91	s	CERAMIC, CHIP 0.022uF 50V	
C532	1-164-004-11	s	CERAMIC, CHIP 0.1uF 10% 25V	
C533	1-163-033-91	s	CERAMIC, CHIP 0.022uF 50V	
C534	1-163-033-91	s	CERAMIC, CHIP 0.022uF 50V	
C535	1-163-033-91	s	CERAMIC, CHIP 0.022uF 50V	
C536	1-163-033-91	s	CERAMIC, CHIP 0.022uF 50V	
C537	1-126-947-11	s	ELECT 47uF 20% 35V	
C538	1-126-947-11	s	ELECT 47uF 20% 35V	
C539	1-163-033-91	s	CERAMIC, CHIP 0.022uF 50V	
C540	1-163-033-91	s	CERAMIC, CHIP 0.022uF 50V	
C542	1-126-947-11	s	ELECT 47uF 20% 35V	
C543	1-126-947-11	s	ELECT 47uF 20% 35V	
C544	1-163-033-91	s	CERAMIC, CHIP 0.022uF 50V	
C545	1-163-251-11	s	CERAMIC, CHIP 100pF 5% 50V	
C546	1-163-243-11	s	CERAMIC, CHIP 47pF 5% 50V	
C547-553	1-163-033-91	s	CERAMIC, CHIP 0.022uF 50V	
*C554	1-163-227-11	s	CERAMIC, CHIP 10pF 5% 50V	*9
*C555	1-163-227-11	s	CERAMIC, CHIP 10pF 5% 50V	*9
C700	1-163-033-91	s	CERAMIC, CHIP 0.022uF 50V	
C701	1-164-232-11	s	CERAMIC, CHIP 0.01uF 10% 100V	
C702	1-163-275-11	s	CERAMIC, CHIP 0.001uF 5% 50V	
C703	1-131-345-00	s	TANTALUM 0.47uF 10% 35V	
C704	1-163-239-11	s	CERAMIC, CHIP 33pF 5% 50V	
C705	1-163-125-00	s	CERAMIC, CHIP 220pF 5% 50V	
C706	1-163-033-91	s	CERAMIC, CHIP 0.022uF 50V	
C707	1-164-004-11	s	CERAMIC, CHIP 0.1uF 10% 25V	
C708	1-126-947-11	s	ELECT 47uF 20% 35V	
C709	1-163-033-91	s	CERAMIC, CHIP 0.022uF 50V	
C710	1-163-033-91	s	CERAMIC, CHIP 0.022uF 50V	
C711	1-163-033-91	s	CERAMIC, CHIP 0.022uF 50V	

Note: In this list * marked parts are design changed.
Refer to pages 18-29 to 18-31 for applicable serial numbers.

(TBC-28 BOARD(for NTSC))

Ref. No. or Q'ty	Part No.	SP	Description	
C712	1-163-033-91	s	CERAMIC, CHIP 0.022uF 50V	
*C713	1-163-237-11	s	CERAMIC, CHIP 27pF 5% 50V	*1
	1-163-241-11	s	CERAMIC, CHIP 39pF 5% 50V	*40
	1-163-106-00	s	CERAMIC, CHIP 36pF 5% 50V	*9
*C714	1-163-251-11	s	CERAMIC, CHIP 100pF 5% 50V	*1
	1-163-102-00	s	CERAMIC, CHIP 24pF 5% 50V	*2
C715	1-164-232-11	s	CERAMIC, CHIP 0.01uF 10% 100V	
C716	1-163-239-11	s	CERAMIC, CHIP 33pF 5% 50V	
C717	1-163-263-11	s	CERAMIC, CHIP 330pF 5% 50V	
C718	1-163-033-91	s	CERAMIC, CHIP 0.022uF 50V	
C719	1-126-947-11	s	ELECT 47uF 20% 35V	
C720	1-163-809-11	s	CERAMIC, CHIP 0.047uF 10% 25V	
C721	1-163-033-91	s	CERAMIC, CHIP 0.022uF 50V	
C722	1-163-033-91	s	CERAMIC, CHIP 0.022uF 50V	
C723	1-163-033-91	s	CERAMIC, CHIP 0.022uF 50V	
C724	1-163-243-11	s	CERAMIC, CHIP 47pF 5% 50V	
C725	1-163-243-11	s	CERAMIC, CHIP 47pF 5% 50V	
C726	1-163-033-91	s	CERAMIC, CHIP 0.022uF 50V	
C727	1-126-947-11	s	ELECT 47uF 20% 35V	
C728	1-163-033-91	s	CERAMIC, CHIP 0.022uF 50V	
C729	1-163-033-91	s	CERAMIC, CHIP 0.022uF 50V	
C730	1-163-113-00	s	CERAMIC, CHIP 68pF 5% 50V	
C731	1-163-033-91	s	CERAMIC, CHIP 0.022uF 50V	
C732	1-164-004-11	s	CERAMIC, CHIP 0.1uF 10% 25V	
C733	1-164-004-11	s	CERAMIC, CHIP 0.1uF 10% 25V	
C734	1-164-004-11	s	CERAMIC, CHIP 0.1uF 10% 25V	
C735	1-164-004-11	s	CERAMIC, CHIP 0.1uF 10% 25V	
C736	1-163-121-00	s	CERAMIC, CHIP 150pF 5% 50V	
C737	1-163-263-11	s	CERAMIC, CHIP 330pF 5% 50V	
C738	1-163-033-91	s	CERAMIC, CHIP 0.022uF 50V	
C739	1-126-947-11	s	ELECT 47uF 20% 35V	
C740	1-163-102-00	s	CERAMIC, CHIP 24pF 5% 50V	
C741	1-163-125-00	s	CERAMIC, CHIP 220pF 5% 50V	
C742	1-163-033-91	s	CERAMIC, CHIP 0.022uF 50V	
C743	1-131-353-00	s	TANTALUM 10uF 10% 35V	
*C744	1-163-033-91	s	CERAMIC, CHIP 0.022uF 50V	*15
C745	1-163-231-11	s	CERAMIC, CHIP 15pF 5% 50V	
C746	1-163-120-00	s	CERAMIC, CHIP 130pF 5% 50V	
C747	1-164-004-11	s	CERAMIC, CHIP 0.1uF 10% 25V	
*C748	1-163-237-11	s	CERAMIC, CHIP 27pF 5% 50V	*1
	1-163-241-11	s	CERAMIC, CHIP 39pF 5% 50V	*40
	1-163-106-00	s	CERAMIC, CHIP 36pF 5% 50V	*9
C749	1-163-120-00	s	CERAMIC, CHIP 130pF 5% 50V	
*C750	1-163-251-11	s	CERAMIC, CHIP 100pF 5% 50V	*1
	1-163-102-00	s	CERAMIC, CHIP 24pF 5% 50V	*2
C751	1-163-231-11	s	CERAMIC, CHIP 15pF 5% 50V	
C752	1-164-232-11	s	CERAMIC, CHIP 0.01uF 10% 100V	
C753	1-126-947-11	s	ELECT 47uF 20% 35V	
C754	1-163-263-11	s	CERAMIC, CHIP 330pF 5% 50V	
C755	1-163-033-91	s	CERAMIC, CHIP 0.022uF 50V	
C756	1-163-809-11	s	CERAMIC, CHIP 0.047uF 10% 25V	
C757	1-163-231-11	s	CERAMIC, CHIP 15pF 5% 50V	
C758	1-126-947-11	s	ELECT 47uF 20% 35V	
C759	1-164-004-11	s	CERAMIC, CHIP 0.1uF 10% 25V	
C760	1-163-243-11	s	CERAMIC, CHIP 47pF 5% 50V	
C761	1-163-033-91	s	CERAMIC, CHIP 0.022uF 50V	
C762	1-163-033-91	s	CERAMIC, CHIP 0.022uF 50V	

(TBC-28 BOARD(for NTSC))

Ref. No. or Q'ty	Part No.	SP	Description	
C763	1-126-947-11	s	ELECT 47uF 20% 35V	
C764	1-163-033-91	s	CERAMIC, CHIP 0.022uF 50V	
C765	1-124-903-11	s	ELECT 1uF 20% 50V	
C767	1-126-947-11	s	ELECT 47uF 20% 35V	
C768	1-163-033-91	s	CERAMIC, CHIP 0.022uF 50V	
C769	1-163-033-91	s	CERAMIC, CHIP 0.022uF 50V	
C770	1-126-947-11	s	ELECT 47uF 20% 35V	
C771	1-163-033-91	s	CERAMIC, CHIP 0.022uF 50V	
C772	1-163-231-11	s	CERAMIC, CHIP 15pF 5% 50V	
C773	1-163-120-00	s	CERAMIC, CHIP 130pF 5% 50V	
C774	1-163-231-11	s	CERAMIC, CHIP 15pF 5% 50V	
C775	1-163-120-00	s	CERAMIC, CHIP 130pF 5% 50V	
C776	1-163-033-91	s	CERAMIC, CHIP 0.022uF 50V	
C777	1-164-232-11	s	CERAMIC, CHIP 0.01uF 10% 100V	
C778	1-163-033-91	s	CERAMIC, CHIP 0.022uF 50V	
C779	1-163-113-00	s	CERAMIC, CHIP 68pF 5% 50V	
C780	1-163-231-11	s	CERAMIC, CHIP 15pF 5% 50V	
C781	1-164-004-11	s	CERAMIC, CHIP 0.1uF 10% 25V	
C782	1-163-033-91	s	CERAMIC, CHIP 0.022uF 50V	
C783	1-163-033-91	s	CERAMIC, CHIP 0.022uF 50V	
C784	1-164-004-11	s	CERAMIC, CHIP 0.1uF 10% 25V	
C785	1-163-033-91	s	CERAMIC, CHIP 0.022uF 50V	
C786	1-163-243-11	s	CERAMIC, CHIP 47pF 5% 50V	
C787	1-163-125-00	s	CERAMIC, CHIP 220pF 5% 50V	
C788	1-163-033-91	s	CERAMIC, CHIP 0.022uF 50V	
C789	1-164-004-11	s	CERAMIC, CHIP 0.1uF 10% 25V	
C790	1-126-947-11	s	ELECT 47uF 20% 35V	
C791	1-163-033-91	s	CERAMIC, CHIP 0.022uF 50V	
C792	1-164-004-11	s	CERAMIC, CHIP 0.1uF 10% 25V	
*C793	1-163-243-11	s	CERAMIC, CHIP 47pF 5% 50V	*1
	1-163-237-11	s	CERAMIC, CHIP 27pF 5% 50V	*2
C794	1-131-345-00	s	TANTALUM 0.47uF 10% 35V	
C795	1-131-353-00	s	TANTALUM 10uF 10% 35V	
C796	1-163-033-91	s	CERAMIC, CHIP 0.022uF 50V	
C797	1-126-947-11	s	ELECT 47uF 20% 35V	
C798	1-163-033-91	s	CERAMIC, CHIP 0.022uF 50V	
C799	1-163-033-91	s	CERAMIC, CHIP 0.022uF 50V	
C800	1-163-033-91	s	CERAMIC, CHIP 0.022uF 50V	
C801	1-163-033-91	s	CERAMIC, CHIP 0.022uF 50V	
*C802	1-163-237-11	s	CERAMIC, CHIP 27pF 5% 50V	*1
	1-163-241-11	s	CERAMIC, CHIP 39pF 5% 50V	*40
	1-163-106-00	s	CERAMIC, CHIP 36pF 5% 50V	*9
*C803	1-163-251-11	s	CERAMIC, CHIP 100pF 5% 50V	*1
	1-163-102-00	s	CERAMIC, CHIP 24pF 5% 50V	*2
C804	1-164-232-11	s	CERAMIC, CHIP 0.01uF 10% 100V	
C805	1-163-263-11	s	CERAMIC, CHIP 330pF 5% 50V	
C806	1-163-809-11	s	CERAMIC, CHIP 0.047uF 10% 25V	
C807	1-164-004-11	s	CERAMIC, CHIP 0.1uF 10% 25V	
C808	1-163-275-11	s	CERAMIC, CHIP 0.001uF 5% 50V	
*C809	1-163-809-11	s	CERAMIC, CHIP 0.047uF 10% 25V	*9
*C810	1-163-809-11	s	CERAMIC, CHIP 0.047uF 10% 25V	*9
CN1	1-564-005-11	o	CONNECTOR 6P, MALE	
CN2	1-564-005-11	o	CONNECTOR 6P, MALE	
CN105	1-573-782-21	o	CONNECTOR, PHEC 60P, MALE	
CN106	1-573-782-21	o	CONNECTOR, PHEC 60P, MALE	
*CV700	1-141-442-91	s	CAP, TRIMMER 20pF	*8
	1-141-443-11	s	CAP, TRIMMER 30pF	*9

Note: In this list * marked parts are design changed.
Refer to pages 18-29 to 18-31 for applicable serial numbers.

(TBC-28 BOARD(for NTSC))

Ref. No. or Q'ty	Part No.	SP	Description	
*CV701	1-141-442-91	s	CAP, TRIMMER 20pF	*8
	1-141-443-11	s	CAP, TRIMMER 30pF	*9
*CV702	1-141-442-91	s	CAP, TRIMMER 20pF	*8
	1-141-443-11	s	CAP, TRIMMER 30pF	*9
D1	8-719-941-04	s	DIODE SB007-03CP	
D2	8-719-941-04	s	DIODE SB007-03CP	
D100	8-719-941-23	s	DIODE DA204U	
D101	8-719-123-82	s	DIODE 1SS303-T1	
D102	8-719-123-85	s	DIODE 1SS304	
D200	8-719-941-23	s	DIODE DA204U	
D301	8-719-941-23	s	DIODE DA204U	
D302	8-719-105-38	s	DIODE RD3.0M-B1	
D303	8-719-041-39	s	DIODE KV1470	
D304	8-719-041-39	s	DIODE KV1470	
D401	8-719-941-23	s	DIODE DA204U	
D402	8-719-105-38	s	DIODE RD3.0M-B1	
D403	8-719-041-39	s	DIODE KV1470	
D404	8-719-041-39	s	DIODE KV1470	
D502	8-719-123-82	s	DIODE 1SS303-T1	
D503	8-719-123-82	s	DIODE 1SS303-T1	
D505	8-719-123-85	s	DIODE 1SS304	
D506	8-719-123-85	s	DIODE 1SS304	
*D700	8-713-300-88	s	DIODE 1T33C-01	*8
	8-719-002-81	s	DIODE 1T363A-M20-T8A	*9
*D703	8-713-300-88	s	DIODE 1T33C-01	*8
	8-719-002-81	s	DIODE 1T363A-M20-T8A	*9
*D704	8-713-300-88	s	DIODE 1T33C-01	*8
	8-719-002-81	s	DIODE 1T363A-M20-T8A	*9
D705	8-719-123-85	s	DIODE 1SS304	
D706	8-719-123-82	s	DIODE 1SS303-T1	
*D707	8-719-123-82	s	DIODE 1SS303-T1	*5
FL500	1-239-769-11	s	FILTER, LOW-PASS 5MHz	
FL501	1-239-767-11	s	FILTER, LOW-PASS 2MHz	
FL502	1-239-767-11	s	FILTER, LOW-PASS 2MHz	
IC1	8-759-168-20	s	IC TA78L09S	
IC2	8-759-168-20	s	IC TA78L09S	
IC3	8-759-822-95	s	IC L79M05T-FA	
IC4	8-759-822-95	s	IC L79M05T-FA	
IC5	8-759-182-84	s	IC PQ05SZ5U	
IC6	8-759-182-84	s	IC PQ05SZ5U	
IC7	8-759-182-84	s	IC PQ05SZ5U	
*IC8	8-759-700-65	s	IC NJM79L05A	*8
IC100	8-759-030-74	s	IC SC14S66FEL	
IC101	8-759-981-48	s	IC NJM082M	
IC102	8-759-908-15	s	IC TL431CLP	
IC103	8-752-334-55	s	IC CXD1175M	
IC200	8-759-030-74	s	IC SC14S66FEL	
IC203	8-752-334-55	s	IC CXD1175M	
IC300	8-759-702-08	s	IC NJM360M	
IC301	8-752-339-03	s	IC CXD2207Q	
IC302	8-759-300-71	s	IC HD14053BFP	
IC303	8-759-100-96	s	IC UPC4558G2	
IC304	8-759-100-96	s	IC UPC4558G2	
IC305	8-759-941-27	s	IC MB4002PF	
IC306	8-759-907-81	s	IC SN74LS221NS	

(TBC-28 BOARD(for NTSC))

Ref. No. or Q'ty	Part No.	SP	Description	
IC307	8-759-991-85	s	IC 74F00SJ	
IC308	8-759-030-74	s	IC SC14S66FEL	
*IC310	8-759-035-93	s	IC TC7S32F-TE85L	*11
IC400	8-759-702-08	s	IC NJM360M	
IC401	8-752-339-03	s	IC CXD2207Q	
IC402	8-759-100-96	s	IC UPC4558G2	
IC403	8-759-100-96	s	IC UPC4558G2	
*IC404	8-759-194-31	s	IC MB4002PF-ER	*8
	8-759-702-08	s	IC NJM360M	*9
IC405	8-759-907-81	s	IC SN74LS221NS	
IC406	8-759-926-24	s	IC SN74HC164ANS	
IC407	8-759-991-85	s	IC 74F00SJ	
IC408	8-759-030-74	s	IC SC14S66FEL	
*IC409	8-759-035-93	s	IC TC7S32F-TE85L	*11
IC501	8-752-362-70	s	IC CXD101-106Q	
IC502	8-752-362-70	s	IC CXD101-106Q	
IC503	8-759-055-71	s	IC CXD8313Q	
IC504	8-759-055-71	s	IC CXD8313Q	
IC505	8-752-340-52	s	IC CXK48324Q	
IC506	8-759-926-55	s	IC SN74HC266NS	
IC507	8-759-147-05	s	IC UPD42101G-3	
IC508	8-752-340-52	s	IC CXK48324Q	
IC509	8-759-927-46	s	IC SN74HC00ANS	
IC510	8-759-926-77	s	IC SN74HC541ANS	
IC511	8-759-925-78	s	IC SN74HC10ANS	
IC512	8-759-926-18	s	IC SN74HC157ANS	
IC513	8-759-926-18	s	IC SN74HC157ANS	
IC514	8-759-239-55	s	IC TC74HC123AF	
IC516	8-759-981-48	s	IC NJM082M	
IC518	8-752-363-43	s	IC CXD1171M-1-TH	
IC519	8-752-363-43	s	IC CXD1171M-1-TH	
IC520	8-752-363-43	s	IC CXD1171M-1-TH	
IC522	8-759-926-24	s	IC SN74HC164ANS	
IC523	8-759-925-85	s	IC SN74HC32ANS	
IC524	8-759-926-18	s	IC SN74HC157ANS	
IC525	8-759-926-18	s	IC SN74HC157ANS	
IC526	8-759-926-18	s	IC SN74HC157ANS	
IC527	8-759-926-18	s	IC SN74HC157ANS	
IC528	8-759-925-90	s	IC SN74HC74ANS	
IC529	8-759-926-27	s	IC SN74HC173NS	
IC530	8-759-926-27	s	IC SN74HC173NS	
IC531	8-759-926-27	s	IC SN74HC173NS	
IC532	8-759-926-27	s	IC SN74HC173NS	
IC533	8-759-031-84	s	IC TC7S04F	
IC534	8-759-926-56	s	IC SN74HC273ANS	
IC535	8-759-009-05	s	IC MC14051BF	
IC700	8-759-300-71	s	IC HD14053BFP	
IC701	8-759-981-48	s	IC NJM082M	
*IC702	8-759-908-15	s	IC TL431CLP	*9
IC703	8-759-987-27	s	IC LM1881M	
IC704	8-752-332-67	s	IC CXD1217M	
IC705	8-759-239-23	s	IC TC74HC86AF	
IC706	8-759-702-08	s	IC NJM360M	
IC707	8-759-100-96	s	IC UPC4558G2	
IC708	8-759-908-15	s	IC TL431CLP	
IC709	8-759-239-55	s	IC TC74HC123AF	
IC710	8-759-239-55	s	IC TC74HC123AF	
IC711	8-759-925-74	s	IC TC74HC04ANS	
IC712	8-759-250-81	s	IC TC5081AP	

Note: In this list * marked parts are design changed.
Refer to pages 18-29 to 18-31 for applicable serial numbers.

(TBC-28 BOARD(for NTSC))

Ref. No. or Q'ty	Part No.	SP	Description	
IC713	8-752-335-47	s	IC CXD1216M	
IC714	8-759-336-06	s	IC MC68HC05C4-SC412511FU	
IC715	8-759-300-71	s	IC HD14053BFP	
IC716	8-759-925-76	s	IC SN74HC08ANS	
*IC717	8-759-031-84	s	IC TC7S04F	*9
IC718	8-759-031-84	s	IC TC7S04F	
IC719	8-759-031-84	s	IC TC7S04F	
IC721	8-759-239-55	s	IC TC74HC123AF	
IC722	8-752-343-03	s	IC CXD2214Q	
IC723	8-759-925-85	s	IC SN74HC32ANS	
*IC724	8-759-925-90	s	IC SN74HC74ANS	*9
IC727	8-759-239-55	s	IC TC74HC123AF	
IC728	8-759-035-93	s	IC TC7S32F-TE85L	
IC729	8-759-927-46	s	IC SN74HC00ANS	
IC730	8-759-925-90	s	IC SN74HC74ANS	
IC732	8-759-031-84	s	IC TC7S04F	
L1-5	1-412-533-21	s	INDUCTOR 47uH	
L100	1-410-478-11	s	INDUCTOR 47uH	
L101	1-410-476-11	s	INDUCTOR 33uH	
L102	1-410-478-11	s	INDUCTOR 47uH	
L103	1-410-478-11	s	INDUCTOR 47uH	
L200	1-410-478-11	s	INDUCTOR 47uH	
L201	1-410-476-11	s	INDUCTOR 33uH	
L202	1-410-478-11	s	INDUCTOR 47uH	
L203	1-410-478-11	s	INDUCTOR 47uH	
L300	1-410-478-11	s	INDUCTOR 47uH	
L301	1-410-478-11	s	INDUCTOR 47uH	
L302	1-408-621-31	s	INDUCTOR 330uH	
L303	1-410-492-11	s	INDUCTOR 680uH	
L304	1-408-419-00	s	INDUCTOR 68uH	
L305	1-410-478-11	s	INDUCTOR 47uH	
L306	1-410-478-11	s	INDUCTOR 47uH	
L307	1-408-406-00	s	INDUCTOR 5.6uH	
L308	1-408-411-00	s	INDUCTOR 15uH	
L400	1-410-478-11	s	INDUCTOR 47uH	
L401	1-410-478-11	s	INDUCTOR 47uH	
L402	1-408-411-00	s	INDUCTOR 15uH	
L403	1-410-476-11	s	INDUCTOR 33uH	
L404	1-410-482-31	s	INDUCTOR 100uH	
L405	1-408-425-00	s	INDUCTOR 220uH	
L406	1-408-416-00	s	INDUCTOR 39uH	
L407	1-410-478-11	s	INDUCTOR 47uH	
L408	1-410-478-11	s	INDUCTOR 47uH	
L500-505	1-410-478-11	s	INDUCTOR 47uH	
L700	1-410-482-31	s	INDUCTOR 100uH	
L701	1-408-419-00	s	INDUCTOR 68uH	
L702	1-410-478-11	s	INDUCTOR 47uH	
L703	1-410-478-11	s	INDUCTOR 47uH	
L704	1-410-478-11	s	INDUCTOR 47uH	
L705	1-410-478-11	s	INDUCTOR 47uH	
L706	1-410-482-31	s	INDUCTOR 100uH	
L707	1-410-476-11	s	INDUCTOR 33uH	
L708	1-410-478-11	s	INDUCTOR 47uH	
L709	1-410-478-11	s	INDUCTOR 47uH	
L711	1-408-419-00	s	INDUCTOR 68uH	
L712	1-408-419-00	s	INDUCTOR 68uH	
L713	1-410-478-11	s	INDUCTOR 47uH	
L714	1-410-478-11	s	INDUCTOR 47uH	

(TBC-28 BOARD(for NTSC))

Ref. No. or Q'ty	Part No.	SP	Description	
L715	1-410-478-11	s	INDUCTOR 47uH	
L716	1-410-478-11	s	INDUCTOR 47uH	
LV300	1-406-746-11	s	INDUCTOR, VAR 22uH	
LV400	1-406-745-11	s	INDUCTOR, VAR 6.8uH	
Q100	8-729-117-32	s	TRANSISTOR 2SC4177	
Q101	8-729-117-32	s	TRANSISTOR 2SC4177	
Q102	8-729-117-32	s	TRANSISTOR 2SC4177	
*Q103	8-729-422-44	s	TRANSISTOR 2SK663	*8
	8-729-118-56	s	TRANSISTOR 2SK852-X2	*9
Q104	8-729-140-63	s	TRANSISTOR 2SA1611-M5M6	
Q200	8-729-117-32	s	TRANSISTOR 2SC4177	
Q201	8-729-117-32	s	TRANSISTOR 2SC4177	
Q202	8-729-117-32	s	TRANSISTOR 2SC4177	
*Q203	8-729-422-44	s	TRANSISTOR 2SK663	*8
	8-729-118-56	s	TRANSISTOR 2SK852-X2	*9
Q300	8-729-117-32	s	TRANSISTOR 2SC4177	
Q301	8-729-117-32	s	TRANSISTOR 2SC4177	
Q302	8-729-117-32	s	TRANSISTOR 2SC4177	
Q303	8-729-140-63	s	TRANSISTOR 2SA1611-M5M6	
Q304	8-729-140-47	s	TRANSISTOR 2SC3735-B34	
Q305	8-729-140-63	s	TRANSISTOR 2SA1611-M5M6	
Q306	8-729-117-32	s	TRANSISTOR 2SC4177	
Q400	8-729-117-32	s	TRANSISTOR 2SC4177	
Q401	8-729-117-32	s	TRANSISTOR 2SC4177	
Q402	8-729-117-32	s	TRANSISTOR 2SC4177	
Q403	8-729-117-32	s	TRANSISTOR 2SC4177	
Q404	8-729-140-63	s	TRANSISTOR 2SA1611-M5M6	
Q405	8-729-140-47	s	TRANSISTOR 2SC3735-B34	
Q406	8-729-140-63	s	TRANSISTOR 2SA1611-M5M6	
Q407	8-729-117-32	s	TRANSISTOR 2SC4177	
Q501	8-729-140-63	s	TRANSISTOR 2SA1611-M5M6	
Q502	8-729-117-32	s	TRANSISTOR 2SC4177	
Q503	8-729-117-32	s	TRANSISTOR 2SC4177	
Q700	8-729-140-63	s	TRANSISTOR 2SA1611-M5M6	
Q701	8-729-117-32	s	TRANSISTOR 2SC4177	
Q702	8-729-907-26	s	TRANSISTOR IMX1	
Q703	8-729-140-63	s	TRANSISTOR 2SA1611-M5M6	
Q704	8-729-117-32	s	TRANSISTOR 2SC4177	
Q705	8-729-117-32	s	TRANSISTOR 2SC4177	
Q706	8-729-117-32	s	TRANSISTOR 2SC4177	
Q707	8-729-907-46	s	TRANSISTOR IMZ1	
*Q708	8-729-201-27	s	TRANSISTOR 2SC2715-Y	*3
	8-729-120-28	s	TRANSISTOR 2SC1623-L5L6	*43
	8-729-117-32	s	TRANSISTOR 2SC4177	*9
Q709	8-729-140-47	s	TRANSISTOR 2SC3735-B34	
Q710	8-729-143-14	s	TRANSISTOR 2SC4176-B35	
Q711	8-729-140-63	s	TRANSISTOR 2SA1611-M5M6	
Q712	8-729-117-32	s	TRANSISTOR 2SC4177	
Q713	8-729-143-14	s	TRANSISTOR 2SC4176-B35	
Q714	8-729-140-63	s	TRANSISTOR 2SA1611-M5M6	
Q715	8-729-140-63	s	TRANSISTOR 2SA1611-M5M6	
Q716	8-729-140-63	s	TRANSISTOR 2SA1611-M5M6	
*Q717	8-729-201-27	s	TRANSISTOR 2SC2715-Y	*3
	8-729-120-28	s	TRANSISTOR 2SC1623-L5L6	*43
	8-729-117-32	s	TRANSISTOR 2SC4177	*9
Q718	8-729-140-47	s	TRANSISTOR 2SC3735-B34	

Note: In this list * marked parts are design changed.
Refer to pages 18-29 to 18-31 for applicable serial numbers.

(TBC-28 BOARD(for NTSC))

Ref. No. or Q'ty	Part No.	SP	Description	
Q719	8-729-140-63	s	TRANSISTOR 2SA1611-M5M6	
Q720	8-729-905-18	s	TRANSISTOR DTC144EU	
*Q721	8-729-201-27	s	TRANSISTOR 2SC2715-Y	*3
	8-729-120-28	s	TRANSISTOR 2SC1623-L5L6	*43
	8-729-117-32	s	TRANSISTOR 2SC4177	*9
Q722	8-729-140-47	s	TRANSISTOR 2SC3735-B34	
*Q723	8-729-907-46	s	TRANSISTOR IMZ1	*9
R100	1-216-638-11	s	METAL, CHIP 300 0.5% 1/10W	
R101	1-216-025-91	s	METAL, CHIP 100 5% 1/10W	
R102	1-216-659-11	s	METAL, CHIP 2.2k 0.5% 1/10W	
R103	1-216-041-00	s	METAL, CHIP 470 5% 1/10W	
R104	1-216-033-00	s	METAL, CHIP 220 5% 1/10W	
R105	1-216-049-91	s	METAL, CHIP 1k 5% 1/10W	
R106	1-216-652-11	s	METAL, CHIP 1.1k 0.5% 1/10W	
R107	1-216-652-11	s	METAL, CHIP 1.1k 0.5% 1/10W	
R108	1-216-059-00	s	METAL, CHIP 2.7k 5% 1/10W	
R109	1-216-025-91	s	METAL, CHIP 100 5% 1/10W	
R110	1-216-093-00	s	METAL, CHIP 68k 5% 1/10W	
R111	1-216-061-00	s	METAL, CHIP 3.3k 5% 1/10W	
R112	1-216-049-91	s	METAL, CHIP 1k 5% 1/10W	
R113	1-216-017-91	s	METAL, CHIP 47 5% 1/10W	
R114	1-216-073-00	s	METAL, CHIP 10k 5% 1/10W	
R115	1-216-097-91	s	METAL, CHIP 100k 5% 1/10W	
R116	1-216-057-00	s	METAL, CHIP 2.2k 5% 1/10W	
R117	1-216-057-00	s	METAL, CHIP 2.2k 5% 1/10W	
R118	1-216-073-00	s	METAL, CHIP 10k 5% 1/10W	
R119	1-216-037-00	s	METAL, CHIP 330 5% 1/10W	
R120	1-216-033-00	s	METAL, CHIP 220 5% 1/10W	
R121	1-216-033-00	s	METAL, CHIP 220 5% 1/10W	
R122	1-216-017-91	s	METAL, CHIP 47 5% 1/10W	
R123	1-216-073-00	s	METAL, CHIP 10k 5% 1/10W	
*R124	1-216-065-00	s	METAL, CHIP 4.7k 5% 1/10W	*9
*R125	1-216-059-00	s	METAL, CHIP 2.7k 5% 1/10W	*9
R200	1-216-638-11	s	METAL, CHIP 300 0.5% 1/10W	
R201	1-216-025-91	s	METAL, CHIP 100 5% 1/10W	
R202	1-216-659-11	s	METAL, CHIP 2.2k 0.5% 1/10W	
R203	1-216-041-00	s	METAL, CHIP 470 5% 1/10W	
R204	1-216-033-00	s	METAL, CHIP 220 5% 1/10W	
R205	1-216-049-91	s	METAL, CHIP 1k 5% 1/10W	
R206	1-216-652-11	s	METAL, CHIP 1.1k 0.5% 1/10W	
R207	1-216-652-11	s	METAL, CHIP 1.1k 0.5% 1/10W	
R208	1-216-059-00	s	METAL, CHIP 2.7k 5% 1/10W	
R209	1-216-025-91	s	METAL, CHIP 100 5% 1/10W	
R210	1-216-081-00	s	METAL, CHIP 22k 5% 1/10W	
R211	1-216-073-00	s	METAL, CHIP 10k 5% 1/10W	
R212	1-216-049-91	s	METAL, CHIP 1k 5% 1/10W	
R213	1-216-017-91	s	METAL, CHIP 47 5% 1/10W	
R214	1-216-073-00	s	METAL, CHIP 10k 5% 1/10W	
R215	1-216-097-91	s	METAL, CHIP 100k 5% 1/10W	
R222	1-216-017-91	s	METAL, CHIP 47 5% 1/10W	
R223	1-216-073-00	s	METAL, CHIP 10k 5% 1/10W	
R301	1-216-049-91	s	METAL, CHIP 1k 5% 1/10W	
R302	1-216-085-00	s	METAL, CHIP 33k 5% 1/10W	
R303	1-216-065-00	s	METAL, CHIP 4.7k 5% 1/10W	
R304	1-216-073-00	s	METAL, CHIP 10k 5% 1/10W	
R305	1-216-085-00	s	METAL, CHIP 33k 5% 1/10W	
R306	1-216-017-91	s	METAL, CHIP 47 5% 1/10W	
R307	1-216-051-00	s	METAL, CHIP 1.2k 5% 1/10W	

(TBC-28 BOARD(for NTSC))

Ref. No. or Q'ty	Part No.	SP	Description	
R308	1-216-025-91	s	METAL, CHIP 100 5% 1/10W	
R309	1-216-057-00	s	METAL, CHIP 2.2k 5% 1/10W	
R310	1-216-033-00	s	METAL, CHIP 220 5% 1/10W	
R311	1-216-049-91	s	METAL, CHIP 1k 5% 1/10W	
R312	1-216-057-00	s	METAL, CHIP 2.2k 5% 1/10W	
R313	1-216-059-00	s	METAL, CHIP 2.7k 5% 1/10W	
R314	1-216-049-91	s	METAL, CHIP 1k 5% 1/10W	
R315	1-216-089-91	s	METAL, CHIP 47k 5% 1/10W	
R316	1-216-049-91	s	METAL, CHIP 1k 5% 1/10W	
R317	1-216-071-00	s	METAL, CHIP 8.2k 5% 1/10W	
R318	1-216-041-00	s	METAL, CHIP 470 5% 1/10W	
R319	1-208-806-11	s	METAL, CHIP 10k 0.5% 1/10W	
R320	1-216-295-91	s	RES, CHIP 0	
R321	1-216-065-00	s	METAL, CHIP 4.7k 5% 1/10W	
R322	1-216-677-11	s	METAL, CHIP 12k 0.5% 1/10W	
R323	1-216-033-00	s	METAL, CHIP 220 5% 1/10W	
R324	1-216-033-00	s	METAL, CHIP 220 5% 1/10W	
R325	1-216-117-00	s	METAL, CHIP 680k 5% 1/10W	
R326	1-208-822-11	s	METAL, CHIP 47k 0.5% 1/10W	
R328	1-216-687-11	s	METAL, CHIP 33k 0.5% 1/10W	
R329	1-208-800-11	s	METAL, CHIP 5.6k 0.5% 1/10W	
R330	1-216-634-11	s	METAL, CHIP 200 0.5% 1/10W	
R331	1-216-025-91	s	METAL, CHIP 100 5% 1/10W	
R332	1-216-057-00	s	METAL, CHIP 2.2k 5% 1/10W	
R333	1-216-667-11	s	METAL, CHIP 4.7k 0.5% 1/10W	
R334	1-216-121-91	s	METAL, CHIP 1M 5% 1/10W	
R335	1-216-033-00	s	METAL, CHIP 220 5% 1/10W	
R336	1-216-061-00	s	METAL, CHIP 3.3k 5% 1/10W	
R337	1-216-671-11	s	METAL, CHIP 6.8k 0.5% 1/10W	
R338	1-208-810-11	s	METAL, CHIP 15k 0.5% 1/10W	
R339	1-216-073-00	s	METAL, CHIP 10k 5% 1/10W	
R340	1-216-025-91	s	METAL, CHIP 100 5% 1/10W	
R341	1-216-659-11	s	METAL, CHIP 2.2k 0.5% 1/10W	
R342	1-216-033-00	s	METAL, CHIP 220 5% 1/10W	
R343	1-216-033-00	s	METAL, CHIP 220 5% 1/10W	
R344	1-216-661-11	s	METAL, CHIP 2.7k 0.5% 1/10W	
R345	1-208-789-11	s	METAL, CHIP 2k 0.5% 1/10W	
R346	1-208-806-11	s	METAL, CHIP 10k 0.5% 1/10W	
R348	1-216-057-00	s	METAL, CHIP 2.2k 5% 1/10W	
R350	1-216-097-91	s	METAL, CHIP 100k 5% 1/10W	
R352	1-216-057-00	s	METAL, CHIP 2.2k 5% 1/10W	
R353	1-216-057-00	s	METAL, CHIP 2.2k 5% 1/10W	
R354	1-216-037-00	s	METAL, CHIP 330 5% 1/10W	
R358	1-216-061-00	s	METAL, CHIP 3.3k 5% 1/10W	
*R359	1-208-822-11	s	METAL, CHIP 47k 0.5% 1/10W	*9
R360	1-216-109-00	s	METAL, CHIP 330k 5% 1/10W	
R361	1-216-057-00	s	METAL, CHIP 2.2k 5% 1/10W	
R363	1-216-017-91	s	METAL, CHIP 47 5% 1/10W	
R367	1-216-073-00	s	METAL, CHIP 10k 5% 1/10W	
R369	1-216-049-91	s	METAL, CHIP 1k 5% 1/10W	
R371	1-216-041-00	s	METAL, CHIP 470 5% 1/10W	
R372	1-216-041-00	s	METAL, CHIP 470 5% 1/10W	
R373	1-216-085-00	s	METAL, CHIP 33k 5% 1/10W	
R374	1-216-085-00	s	METAL, CHIP 33k 5% 1/10W	
R375	1-216-085-00	s	METAL, CHIP 33k 5% 1/10W	
R376	1-216-017-91	s	METAL, CHIP 47 5% 1/10W	
R380	1-208-814-11	s	METAL, CHIP 22k 0.5% 1/10W	
R400	1-216-085-00	s	METAL, CHIP 33k 5% 1/10W	
R401	1-216-065-00	s	METAL, CHIP 4.7k 5% 1/10W	

Note: In this list * marked parts are design changed.
Refer to pages 18-29 to 18-31 for applicable serial numbers.

Ref. No. or Q'ty	Part No.	SP	Description	
R402	1-216-073-00	s	METAL, CHIP 10k 5% 1/10W	
R403	1-216-085-00	s	METAL, CHIP 33k 5% 1/10W	
R404	1-216-017-91	s	METAL, CHIP 47 5% 1/10W	
R405	1-216-049-91	s	METAL, CHIP 1k 5% 1/10W	
R406	1-216-065-00	s	METAL, CHIP 4.7k 5% 1/10W	
R407	1-216-049-91	s	METAL, CHIP 1k 5% 1/10W	
R408	1-216-025-91	s	METAL, CHIP 100 5% 1/10W	
R409	1-216-049-91	s	METAL, CHIP 1k 5% 1/10W	
R410	1-216-057-00	s	METAL, CHIP 2.2k 5% 1/10W	
R411	1-216-033-00	s	METAL, CHIP 220 5% 1/10W	
R412	1-216-057-00	s	METAL, CHIP 2.2k 5% 1/10W	
R413	1-216-059-00	s	METAL, CHIP 2.7k 5% 1/10W	
R414	1-216-049-91	s	METAL, CHIP 1k 5% 1/10W	
R415	1-216-049-91	s	METAL, CHIP 1k 5% 1/10W	
R416	1-216-089-91	s	METAL, CHIP 47k 5% 1/10W	
R417	1-216-041-00	s	METAL, CHIP 470 5% 1/10W	
R419	1-216-121-91	s	METAL, CHIP 1M 5% 1/10W	
R421	1-216-065-00	s	METAL, CHIP 4.7k 5% 1/10W	
R422	1-216-037-00	s	METAL, CHIP 330 5% 1/10W	
R423	1-208-822-11	s	METAL, CHIP 47k 0.5% 1/10W	
R424	1-216-033-00	s	METAL, CHIP 220 5% 1/10W	
R425	1-216-033-00	s	METAL, CHIP 220 5% 1/10W	
R426	1-216-117-00	s	METAL, CHIP 680k 5% 1/10W	
R427	1-216-645-11	s	METAL, CHIP 560 0.5% 1/10W	
R428	1-216-623-11	s	METAL, CHIP 68 0.5% 1/10W	
R429	1-216-655-11	s	METAL, CHIP 1.5k 0.5% 1/10W	
R430	1-216-121-91	s	METAL, CHIP 1M 5% 1/10W	
*R431	1-216-679-11	s	METAL, CHIP 15k 0.5% 1/10W	*8
	1-216-051-00	s	METAL, CHIP 1.2k 5% 1/10W	*9
R432	1-216-049-91	s	METAL, CHIP 1k 5% 1/10W	
R433	1-216-033-00	s	METAL, CHIP 220 5% 1/10W	
R434	1-216-673-11	s	METAL, CHIP 8.2k 0.5% 1/10W	
R435	1-216-667-11	s	METAL, CHIP 4.7k 0.5% 1/10W	
R436	1-216-061-00	s	METAL, CHIP 3.3k 5% 1/10W	
R437	1-216-671-11	s	METAL, CHIP 6.8k 0.5% 1/10W	
R438	1-208-810-11	s	METAL, CHIP 15k 0.5% 1/10W	
R439	1-216-073-00	s	METAL, CHIP 10k 5% 1/10W	
R440	1-216-025-91	s	METAL, CHIP 100 5% 1/10W	
R441	1-216-659-11	s	METAL, CHIP 2.2k 0.5% 1/10W	
R442	1-216-033-00	s	METAL, CHIP 220 5% 1/10W	
R443	1-216-033-00	s	METAL, CHIP 220 5% 1/10W	
R444	1-216-661-11	s	METAL, CHIP 2.7k 0.5% 1/10W	
R445	1-208-789-11	s	METAL, CHIP 2k 0.5% 1/10W	
R446	1-208-806-11	s	METAL, CHIP 10k 0.5% 1/10W	
R447	1-216-037-00	s	METAL, CHIP 330 5% 1/10W	
R448	1-216-057-00	s	METAL, CHIP 2.2k 5% 1/10W	
R449	1-216-097-91	s	METAL, CHIP 100k 5% 1/10W	
R450	1-216-057-00	s	METAL, CHIP 2.2k 5% 1/10W	
R451	1-216-057-00	s	METAL, CHIP 2.2k 5% 1/10W	
R452	1-216-061-00	s	METAL, CHIP 3.3k 5% 1/10W	
R453	1-216-109-00	s	METAL, CHIP 330k 5% 1/10W	
R454	1-216-057-00	s	METAL, CHIP 2.2k 5% 1/10W	
R455	1-216-017-91	s	METAL, CHIP 47 5% 1/10W	
R456	1-216-073-00	s	METAL, CHIP 10k 5% 1/10W	
R457	1-216-049-91	s	METAL, CHIP 1k 5% 1/10W	
R458	1-208-822-11	s	METAL, CHIP 47k 0.5% 1/10W	
R459	1-216-041-00	s	METAL, CHIP 470 5% 1/10W	
R460	1-216-041-00	s	METAL, CHIP 470 5% 1/10W	
R461	1-216-085-00	s	METAL, CHIP 33k 5% 1/10W	

(TBC-28 BOARD(for NTSC))

Ref. No. or Q'ty	Part No.	SP	Description	
R462	1-216-085-00	s	METAL, CHIP 33k 5% 1/10W	
R463	1-216-085-00	s	METAL, CHIP 33k 5% 1/10W	
R464	1-216-017-91	s	METAL, CHIP 47 5% 1/10W	
R466	1-216-634-11	s	METAL, CHIP 200 0.5% 1/10W	
R468	1-208-800-11	s	METAL, CHIP 5.6k 0.5% 1/10W	
*R470	1-216-687-11	s	METAL, CHIP 33k 0.5% 1/10W	*9
R500-506	1-216-057-00	s	METAL, CHIP 2.2k 5% 1/10W	
R507	1-216-041-00	s	METAL, CHIP 470 5% 1/10W	
R508-512	1-216-057-00	s	METAL, CHIP 2.2k 5% 1/10W	
R513	1-216-097-91	s	METAL, CHIP 100k 5% 1/10W	
R514	1-216-057-00	s	METAL, CHIP 2.2k 5% 1/10W	
R515	1-216-057-00	s	METAL, CHIP 2.2k 5% 1/10W	
R516	1-216-057-00	s	METAL, CHIP 2.2k 5% 1/10W	
R519	1-216-017-91	s	METAL, CHIP 47 5% 1/10W	
R521	1-216-097-91	s	METAL, CHIP 100k 5% 1/10W	
R523	1-216-097-91	s	METAL, CHIP 100k 5% 1/10W	
R529	1-216-073-00	s	METAL, CHIP 10k 5% 1/10W	
R540	1-216-097-91	s	METAL, CHIP 100k 5% 1/10W	
R541	1-216-089-91	s	METAL, CHIP 47k 5% 1/10W	
R542	1-216-057-00	s	METAL, CHIP 2.2k 5% 1/10W	
R543	1-216-057-00	s	METAL, CHIP 2.2k 5% 1/10W	
R564	1-216-071-00	s	METAL, CHIP 8.2k 5% 1/10W	
*R565	1-216-686-11	s	METAL, CHIP 30k 0.5% 1/10W	*1
	1-216-081-00	s	METAL, CHIP 22k 5% 1/10W	*2
R566	1-208-817-11	s	METAL, CHIP 30k 0.5% 1/10W	
R567	1-208-814-11	s	METAL, CHIP 22k 0.5% 1/10W	
R568	1-216-081-00	s	METAL, CHIP 22k 5% 1/10W	
R569	1-216-085-00	s	METAL, CHIP 33k 5% 1/10W	
R570	1-216-667-11	s	METAL, CHIP 4.7k 0.5% 1/10W	
R571	1-208-822-11	s	METAL, CHIP 47k 0.5% 1/10W	
R572	1-216-665-11	s	METAL, CHIP 3.9k 0.5% 1/10W	
R573	1-216-089-91	s	METAL, CHIP 47k 5% 1/10W	
R574	1-216-665-11	s	METAL, CHIP 3.9k 0.5% 1/10W	
R575	1-216-639-11	s	METAL, CHIP 330 0.5% 1/10W	
R576	1-216-639-11	s	METAL, CHIP 330 0.5% 1/10W	
R577	1-216-639-11	s	METAL, CHIP 330 0.5% 1/10W	
R580	1-216-639-11	s	METAL, CHIP 330 0.5% 1/10W	
R581	1-216-639-11	s	METAL, CHIP 330 0.5% 1/10W	
R582	1-216-639-11	s	METAL, CHIP 330 0.5% 1/10W	
R584	1-216-045-00	s	METAL, CHIP 680 5% 1/10W	
R585	1-216-619-11	s	METAL, CHIP 47 0.5% 1/10W	
R586	1-216-619-11	s	METAL, CHIP 47 0.5% 1/10W	
R587	1-216-041-00	s	METAL, CHIP 470 5% 1/10W	
R588	1-216-619-11	s	METAL, CHIP 47 0.5% 1/10W	
R589	1-216-041-00	s	METAL, CHIP 470 5% 1/10W	
R590	1-216-093-00	s	METAL, CHIP 68k 5% 1/10W	
R591	1-216-017-91	s	METAL, CHIP 47 5% 1/10W	
R592	1-216-017-91	s	METAL, CHIP 47 5% 1/10W	
R593	1-208-810-11	s	METAL, CHIP 15k 0.5% 1/10W	
R594	1-216-017-91	s	METAL, CHIP 47 5% 1/10W	
R595	1-216-093-00	s	METAL, CHIP 68k 5% 1/10W	
R596	1-216-093-00	s	METAL, CHIP 68k 5% 1/10W	
R700	1-216-097-91	s	METAL, CHIP 100k 5% 1/10W	
R701	1-216-097-91	s	METAL, CHIP 100k 5% 1/10W	
R702	1-216-097-91	s	METAL, CHIP 100k 5% 1/10W	
R705	1-216-295-91	s	RES, CHIP 0	
R706	1-216-295-91	s	RES, CHIP 0	
R707	1-216-049-91	s	METAL, CHIP 1k 5% 1/10W	
R708	1-216-093-00	s	METAL, CHIP 68k 5% 1/10W	

Note: In this list * marked parts are design changed.
Refer to pages 18-29 to 18-31 for applicable serial numbers.

(TBC-28 BOARD(for NTSC))

Ref. No. or Q'ty	Part No.	SP	Description
R709	1-216-049-91	s	METAL, CHIP 1k 5% 1/10W
R710	1-216-093-00	s	METAL, CHIP 68k 5% 1/10W
R711	1-216-097-91	s	METAL, CHIP 100k 5% 1/10W
R712	1-216-085-00	s	METAL, CHIP 33k 5% 1/10W
R713	1-216-051-00	s	METAL, CHIP 1.2k 5% 1/10W
R714	1-216-081-00	s	METAL, CHIP 22k 5% 1/10W
R715	1-216-059-00	s	METAL, CHIP 2.7k 5% 1/10W
R716	1-216-649-11	s	METAL, CHIP 820 0.5% 1/10W
*R717	1-216-073-00	s	METAL, CHIP 10k 5% 1/10W *9
R718	1-216-059-00	s	METAL, CHIP 2.7k 5% 1/10W
R719	1-216-017-91	s	METAL, CHIP 47 5% 1/10W
R720	1-216-049-91	s	METAL, CHIP 1k 5% 1/10W
R721	1-216-659-11	s	METAL, CHIP 2.2k 0.5% 1/10W
R722	1-216-071-00	s	METAL, CHIP 8.2k 5% 1/10W
R723	1-216-037-00	s	METAL, CHIP 330 5% 1/10W
R724	1-216-061-00	s	METAL, CHIP 3.3k 5% 1/10W
R725	1-216-057-00	s	METAL, CHIP 2.2k 5% 1/10W
R726	1-216-659-11	s	METAL, CHIP 2.2k 0.5% 1/10W
*R727	1-216-049-91	s	METAL, CHIP 1k 5% 1/10W *9
R728	1-216-045-00	s	METAL, CHIP 680 5% 1/10W
R729	1-216-645-11	s	METAL, CHIP 560 0.5% 1/10W
R730	1-216-049-91	s	METAL, CHIP 1k 5% 1/10W
R731	1-216-065-00	s	METAL, CHIP 4.7k 5% 1/10W
R732	1-216-065-00	s	METAL, CHIP 4.7k 5% 1/10W
R733	1-208-806-11	s	METAL, CHIP 10k 0.5% 1/10W
R734	1-216-651-11	s	METAL, CHIP 1k 0.5% 1/10W
R735	1-216-059-00	s	METAL, CHIP 2.7k 5% 1/10W
R736	1-216-649-11	s	METAL, CHIP 820 0.5% 1/10W
R737	1-216-059-00	s	METAL, CHIP 2.7k 5% 1/10W
R738	1-216-057-00	s	METAL, CHIP 2.2k 5% 1/10W
R739	1-208-789-11	s	METAL, CHIP 2k 0.5% 1/10W
R740	1-216-648-11	s	METAL, CHIP 750 0.5% 1/10W
R741	1-216-079-00	s	METAL, CHIP 18k 5% 1/10W
R742	1-208-814-11	s	METAL, CHIP 22k 0.5% 1/10W
R743	1-208-814-11	s	METAL, CHIP 22k 0.5% 1/10W
R744	1-216-081-00	s	METAL, CHIP 22k 5% 1/10W
*R745	1-216-045-00	s	METAL, CHIP 680 5% 1/10W *9
R746	1-216-081-00	s	METAL, CHIP 22k 5% 1/10W
R747	1-216-041-00	s	METAL, CHIP 470 5% 1/10W
R748	1-216-687-11	s	METAL, CHIP 33k 0.5% 1/10W
R749	1-216-671-11	s	METAL, CHIP 6.8k 0.5% 1/10W
R750	1-208-800-11	s	METAL, CHIP 5.6k 0.5% 1/10W
*R751	1-216-033-00	s	METAL, CHIP 220 5% 1/10W *9
*R752	1-208-814-11	s	METAL, CHIP 22k 0.5% 1/10W *9
*R753	1-208-814-11	s	METAL, CHIP 22k 0.5% 1/10W *9
*R754	1-216-057-00	s	METAL, CHIP 2.2k 5% 1/10W *9
*R755	1-216-057-00	s	METAL, CHIP 2.2k 5% 1/10W *9
R756	1-216-017-91	s	METAL, CHIP 47 5% 1/10W
R757	1-216-097-91	s	METAL, CHIP 100k 5% 1/10W
R758	1-216-057-00	s	METAL, CHIP 2.2k 5% 1/10W
R759	1-216-069-00	s	METAL, CHIP 6.8k 5% 1/10W
R760	1-216-655-11	s	METAL, CHIP 1.5k 0.5% 1/10W
R761	1-216-085-00	s	METAL, CHIP 33k 5% 1/10W
R762	1-216-017-91	s	METAL, CHIP 47 5% 1/10W
R763	1-216-097-91	s	METAL, CHIP 100k 5% 1/10W
R764	1-208-789-11	s	METAL, CHIP 2k 0.5% 1/10W
R765	1-216-051-00	s	METAL, CHIP 1.2k 5% 1/10W
R766	1-216-648-11	s	METAL, CHIP 750 0.5% 1/10W
R767	1-216-037-00	s	METAL, CHIP 330 5% 1/10W

(TBC-28 BOARD(for NTSC))

Ref. No. or Q'ty	Part No.	SP	Description
R768	1-216-069-00	s	METAL, CHIP 6.8k 5% 1/10W
R769	1-208-817-11	s	METAL, CHIP 30k 0.5% 1/10W
R770	1-216-045-00	s	METAL, CHIP 680 5% 1/10W
R771	1-216-651-11	s	METAL, CHIP 1k 0.5% 1/10W
R772	1-216-667-11	s	METAL, CHIP 4.7k 0.5% 1/10W
R773	1-216-667-11	s	METAL, CHIP 4.7k 0.5% 1/10W
R774	1-216-635-11	s	METAL, CHIP 220 0.5% 1/10W
R775	1-216-651-11	s	METAL, CHIP 1k 0.5% 1/10W
R776	1-216-049-91	s	METAL, CHIP 1k 5% 1/10W
R777	1-216-081-00	s	METAL, CHIP 22k 5% 1/10W
R778	1-216-081-00	s	METAL, CHIP 22k 5% 1/10W
R779	1-216-081-00	s	METAL, CHIP 22k 5% 1/10W
R780	1-216-651-11	s	METAL, CHIP 1k 0.5% 1/10W
R781	1-216-667-11	s	METAL, CHIP 4.7k 0.5% 1/10W
R782	1-216-667-11	s	METAL, CHIP 4.7k 0.5% 1/10W
R783	1-216-651-11	s	METAL, CHIP 1k 0.5% 1/10W
R784	1-216-635-11	s	METAL, CHIP 220 0.5% 1/10W
R785	1-216-651-11	s	METAL, CHIP 1k 0.5% 1/10W
R786	1-216-049-91	s	METAL, CHIP 1k 5% 1/10W
R787	1-216-651-11	s	METAL, CHIP 1k 0.5% 1/10W
R788	1-216-667-11	s	METAL, CHIP 4.7k 0.5% 1/10W
R789	1-216-667-11	s	METAL, CHIP 4.7k 0.5% 1/10W
R790	1-216-659-11	s	METAL, CHIP 2.2k 0.5% 1/10W
*R791	1-216-677-11	s	METAL, CHIP 12k 0.5% 1/10W *9
R792	1-208-810-11	s	METAL, CHIP 15k 0.5% 1/10W
*R794	1-216-081-00	s	METAL, CHIP 22k 5% 1/10W *9
R795-801	1-216-057-00	s	METAL, CHIP 2.2k 5% 1/10W
R802	1-216-041-00	s	METAL, CHIP 470 5% 1/10W
R803	1-216-057-00	s	METAL, CHIP 2.2k 5% 1/10W
R804	1-216-057-00	s	METAL, CHIP 2.2k 5% 1/10W
R805	1-216-041-00	s	METAL, CHIP 470 5% 1/10W
R806	1-216-041-00	s	METAL, CHIP 470 5% 1/10W
R807	1-216-041-00	s	METAL, CHIP 470 5% 1/10W
R808	1-216-057-00	s	METAL, CHIP 2.2k 5% 1/10W
R809	1-216-081-00	s	METAL, CHIP 22k 5% 1/10W
R810	1-216-085-00	s	METAL, CHIP 33k 5% 1/10W
R811	1-216-081-00	s	METAL, CHIP 22k 5% 1/10W
R812	1-216-049-91	s	METAL, CHIP 1k 5% 1/10W
R813	1-216-073-00	s	METAL, CHIP 10k 5% 1/10W
R814	1-216-037-00	s	METAL, CHIP 330 5% 1/10W
R815	1-216-069-00	s	METAL, CHIP 6.8k 5% 1/10W
R816	1-208-817-11	s	METAL, CHIP 30k 0.5% 1/10W
R817	1-216-045-00	s	METAL, CHIP 680 5% 1/10W
R818	1-216-097-91	s	METAL, CHIP 100k 5% 1/10W
R819	1-208-806-11	s	METAL, CHIP 10k 0.5% 1/10W
*R820	1-216-065-00	s	METAL, CHIP 4.7k 5% 1/10W *9
*R821	1-216-065-00	s	METAL, CHIP 4.7k 5% 1/10W *9
*R822	1-216-065-00	s	METAL, CHIP 4.7k 5% 1/10W *9
*R823	1-216-065-00	s	METAL, CHIP 4.7k 5% 1/10W *9
*R824	1-216-073-00	s	METAL, CHIP 10k 5% 1/10W *9
R825	1-216-017-91	s	METAL, CHIP 47 5% 1/10W
R826	1-216-049-91	s	METAL, CHIP 1k 5% 1/10W
R827	1-216-652-11	s	METAL, CHIP 1.1k 0.5% 1/10W
R828	1-216-073-00	s	METAL, CHIP 10k 5% 1/10W
R829	1-216-073-00	s	METAL, CHIP 10k 5% 1/10W
R830	1-216-049-91	s	METAL, CHIP 1k 5% 1/10W
R831	1-216-655-11	s	METAL, CHIP 1.5k 0.5% 1/10W
*R833	1-216-045-00	s	METAL, CHIP 680 5% 1/10W *9
R834	1-216-295-91	s	RES, CHIP 0

Note: In this list * marked parts are design changed.
Refer to pages 18-29 to 18-31 for applicable serial numbers.

(TBC-28 BOARD(for NTSC))

Ref. No. or Q'ty	Part No.	SP	Description	
R837	1-216-295-91	s	RES, CHIP 0	
R838	1-216-057-00	s	METAL, CHIP 2.2k 5% 1/10W	
R839	1-216-073-00	s	METAL, CHIP 10k 5% 1/10W	
R840	1-216-085-00	s	METAL, CHIP 33k 5% 1/10W	
R843	1-216-017-91	s	METAL, CHIP 47 5% 1/10W	
R844	1-216-645-11	s	METAL, CHIP 560 0.5% 1/10W	
*R845	1-216-658-11	s	METAL, CHIP 2k 0.5% 1/10W	*1
	1-216-641-11	s	METAL, CHIP 390 0.5% 1/10W	*2
R846	1-216-017-91	s	METAL, CHIP 47 5% 1/10W	
R848	1-216-089-91	s	METAL, CHIP 47k 5% 1/10W	
*R850	1-216-097-00	s	METAL, CHIP 100k 5% 1/10W	*8
R851	1-216-017-91	s	METAL, CHIP 47 5% 1/10W	
R852	1-216-295-91	s	RES, CHIP 0	
R854	1-216-295-91	s	RES, CHIP 0	
R856	1-208-789-11	s	METAL, CHIP 2k 0.5% 1/10W	
R857	1-216-051-00	s	METAL, CHIP 1.2k 5% 1/10W	
R858	1-216-648-11	s	METAL, CHIP 750 0.5% 1/10W	
R859	1-216-037-00	s	METAL, CHIP 330 5% 1/10W	
R860	1-216-069-00	s	METAL, CHIP 6.8k 5% 1/10W	
R861	1-208-817-11	s	METAL, CHIP 30k 0.5% 1/10W	
R862	1-216-045-00	s	METAL, CHIP 680 5% 1/10W	
R864	1-216-295-91	s	RES, CHIP 0	
*R865	1-216-295-91	s	RES, CHIP 0	*9
*R867	1-216-295-91	s	RES, CHIP 0	*9
R869	1-216-073-00	s	METAL, CHIP 10k 5% 1/10W	
R873	1-216-295-91	s	RES, CHIP 0	
R875	1-216-671-11	s	METAL, CHIP 6.8k 0.5% 1/10W	
R876	1-216-133-00	s	METAL, CHIP 3.3M 5% 1/10W	
R877	1-216-017-91	s	METAL, CHIP 47 5% 1/10W	
RV100	1-241-758-11	s	RES, ADJ METAL 100	
RV200	1-241-758-11	s	RES, ADJ METAL 100	
RV300	1-241-786-11	s	RES, ADJ METAL 22k	
RV301	1-241-763-11	s	RES, ADJ METAL 4.7k	
RV400	1-241-786-11	s	RES, ADJ METAL 22k	
RV401	1-241-763-11	s	RES, ADJ METAL 4.7k	
*RV500	1-241-784-11	s	RES, ADJ METAL 4.7k	*1
	1-241-785-11	s	RES, ADJ METAL 10k	*2
RV501	1-241-784-11	s	RES, ADJ METAL 4.7k	
RV502	1-241-785-11	s	RES, ADJ METAL 10k	
RV700	1-241-783-11	s	RES, ADJ METAL 2.2k	
RV701	1-241-784-11	s	RES, ADJ METAL 4.7k	
RV703	1-241-785-11	s	RES, ADJ METAL 10k	
RV706	1-241-784-11	s	RES, ADJ METAL 4.7k	
RV707	1-241-784-11	s	RES, ADJ METAL 4.7k	
S500	1-692-535-11	s	SWITCH, DIP 4-CKT	
TH400	1-807-972-11	s	THERMISTOR SV-1715 1.25k	
X700	1-527-722-00	s	CRYSTAL 14.31818MHz	
X701	1-527-722-00	s	CRYSTAL 14.31818MHz	
X702	1-527-722-00	s	CRYSTAL 14.31818MHz	

TBC-28P BOARD(for PAL)

Ref. No. or Q'ty	Part No.	SP	Description
1pc	A-8275-606-A	o	MOUNTED CIRCUIT BOARD, TBC-28P
1pc	3-182-386-02	o	PLATE, SHIELD (L), CARD
1pc	7-621-759-45	s	SCREW, +PSW2.6x6
1pc	3-179-084-01	s	LEVER (R), PC BOARD
1pc	3-179-085-01	s	LEVER (L), PC BOARD
2pcs	1-750-484-11	s	BUS-BAR
C1	1-126-933-11	s	ELECT 100uF 20% 16V
C2	1-126-933-11	s	ELECT 100uF 20% 16V
C3	1-163-033-91	s	CERAMIC, CHIP 0.022uF 50V
C4	1-126-933-11	s	ELECT 100uF 20% 16V
C5	1-126-933-11	s	ELECT 100uF 20% 16V
C6	1-126-933-11	s	ELECT 100uF 20% 16V
C7	1-126-933-11	s	ELECT 100uF 20% 16V
C8	1-163-033-91	s	CERAMIC, CHIP 0.022uF 50V
C9	1-126-933-11	s	ELECT 100uF 20% 16V
C10	1-126-933-11	s	ELECT 100uF 20% 16V
C11	1-163-033-91	s	CERAMIC, CHIP 0.022uF 50V
C12	1-126-933-11	s	ELECT 100uF 20% 16V
C13	1-126-933-11	s	ELECT 100uF 20% 16V
C14	1-126-933-11	s	ELECT 100uF 20% 16V
C15	1-163-033-91	s	CERAMIC, CHIP 0.022uF 50V
C16-21	1-126-933-11	s	ELECT 100uF 20% 16V
C22	1-163-033-91	s	CERAMIC, CHIP 0.022uF 50V
C100	1-163-033-91	s	CERAMIC, CHIP 0.022uF 50V
C101	1-126-947-11	s	ELECT 47uF 20% 35V
C102	1-163-231-11	s	CERAMIC, CHIP 15pF 5% 50V
C103	1-163-231-11	s	CERAMIC, CHIP 15pF 5% 50V
C104	1-163-033-91	s	CERAMIC, CHIP 0.022uF 50V
C105	1-163-033-91	s	CERAMIC, CHIP 0.022uF 50V
C106	1-163-033-91	s	CERAMIC, CHIP 0.022uF 50V
C107	1-126-947-11	s	ELECT 47uF 20% 35V
C108	1-163-809-11	s	CERAMIC, CHIP 0.047uF 10% 25V
C109	1-124-903-11	s	ELECT 1uF 20% 50V
C110	1-131-353-00	s	TANTALUM 10uF 10% 35V
C111	1-163-239-11	s	CERAMIC, CHIP 33pF 5% 50V
C112	1-164-004-11	s	CERAMIC, CHIP 0.1uF 10% 25V
C113	1-126-934-11	s	ELECT 220uF 20% 16V
C114	1-126-947-11	s	ELECT 47uF 20% 35V
C115	1-163-033-91	s	CERAMIC, CHIP 0.022uF 50V
C116	1-163-033-91	s	CERAMIC, CHIP 0.022uF 50V
C117	1-126-947-11	s	ELECT 47uF 20% 35V
C118	1-126-933-11	s	ELECT 100uF 20% 16V
C200	1-163-033-91	s	CERAMIC, CHIP 0.022uF 50V
C201	1-126-947-11	s	ELECT 47uF 20% 35V
C202	1-163-231-11	s	CERAMIC, CHIP 15pF 5% 50V
C203	1-163-231-11	s	CERAMIC, CHIP 15pF 5% 50V
C204	1-163-033-91	s	CERAMIC, CHIP 0.022uF 50V
C205	1-163-033-91	s	CERAMIC, CHIP 0.022uF 50V
C206	1-163-033-91	s	CERAMIC, CHIP 0.022uF 50V
C207	1-126-947-11	s	ELECT 47uF 20% 35V
C208	1-163-809-11	s	CERAMIC, CHIP 0.047uF 10% 25V
C209	1-124-903-11	s	ELECT 1uF 20% 50V
C210	1-131-353-00	s	TANTALUM 10uF 10% 35V
C211	1-163-239-11	s	CERAMIC, CHIP 33pF 5% 50V
C212	1-164-004-11	s	CERAMIC, CHIP 0.1uF 10% 25V
C213	1-126-934-11	s	ELECT 220uF 20% 16V
C214	1-126-947-11	s	ELECT 47uF 20% 35V
C215	1-163-033-91	s	CERAMIC, CHIP 0.022uF 50V

Note: In this list * marked parts are design changed.
Refer to pages 18-29 to 18-31 for applicable serial numbers.

(TBC-28P BOARD(for PAL))

Ref. No. or Q'ty	Part No.	SP	Description	
C216	1-163-033-91	s	CERAMIC, CHIP 0.022uF 50V	
C218	1-126-933-11	s	ELECT 100uF 20% 16V	
C300	1-126-947-11	s	ELECT 47uF 20% 35V	
C301	1-163-033-91	s	CERAMIC, CHIP 0.022uF 50V	
C302	1-163-251-11	s	CERAMIC, CHIP 100pF 5% 50V	
C303	1-163-033-91	s	CERAMIC, CHIP 0.022uF 50V	
C305	1-163-033-91	s	CERAMIC, CHIP 0.022uF 50V	
C306	1-163-251-11	s	CERAMIC, CHIP 100pF 5% 50V	
C307	1-163-133-00	s	CERAMIC, CHIP 470pF 5% 50V	
C308	1-163-263-11	s	CERAMIC, CHIP 330pF 5% 50V	
C309	1-126-947-11	s	ELECT 47uF 20% 35V	
C310	1-163-033-91	s	CERAMIC, CHIP 0.022uF 50V	
C311	1-126-947-11	s	ELECT 47uF 20% 35V	
C312-316	1-163-033-91	s	CERAMIC, CHIP 0.022uF 50V	
C317	1-126-964-11	s	ELECT 10uF 20% 50V	
C318	1-163-033-91	s	CERAMIC, CHIP 0.022uF 50V	
C319	1-163-033-91	s	CERAMIC, CHIP 0.022uF 50V	
C320	1-163-033-91	s	CERAMIC, CHIP 0.022uF 50V	
C321	1-163-251-11	s	CERAMIC, CHIP 100pF 5% 50V	
C322	1-163-133-00	s	CERAMIC, CHIP 470pF 5% 50V	
C324	1-163-033-91	s	CERAMIC, CHIP 0.022uF 50V	
C325	1-164-004-11	s	CERAMIC, CHIP 0.1uF 10% 25V	
C326	1-164-232-11	s	CERAMIC, CHIP 0.01uF 10% 100V	
C327	1-124-903-11	s	ELECT 1uF 20% 50V	
C328	1-163-033-91	s	CERAMIC, CHIP 0.022uF 50V	
C329	1-163-033-91	s	CERAMIC, CHIP 0.022uF 50V	
C330	1-164-004-11	s	CERAMIC, CHIP 0.1uF 10% 25V	
C331	1-124-903-11	s	ELECT 1uF 20% 50V	
C332	1-164-004-11	s	CERAMIC, CHIP 0.1uF 10% 25V	
C333	1-163-243-11	s	CERAMIC, CHIP 47pF 5% 50V	
C334	1-126-933-11	s	ELECT 100uF 20% 16V	
C335	1-163-033-91	s	CERAMIC, CHIP 0.022uF 50V	
C336	1-163-133-00	s	CERAMIC, CHIP 470pF 5% 50V	
C337	1-164-232-11	s	CERAMIC, CHIP 0.01uF 10% 100V	
C338	1-163-033-91	s	CERAMIC, CHIP 0.022uF 50V	
C339	1-163-251-11	s	CERAMIC, CHIP 100pF 5% 50V	
C340	1-163-033-91	s	CERAMIC, CHIP 0.022uF 50V	
C341	1-163-125-00	s	CERAMIC, CHIP 220pF 5% 50V	
C342	1-163-133-00	s	CERAMIC, CHIP 470pF 5% 50V	
C344	1-163-243-11	s	CERAMIC, CHIP 47pF 5% 50V	
*C345	1-163-251-11	s	CERAMIC, CHIP 100pF 5% 50V	*8
	1-163-247-11	s	CERAMIC, CHIP 68pF 5% 50V	*42
	1-163-243-11	s	CERAMIC, CHIP 47pF 5% 50V	*12
C347	1-164-004-11	s	CERAMIC, CHIP 0.1uF 10% 25V	
*C348	1-163-227-11	s	CERAMIC, CHIP 10pF 5% 50V	*9
*C349	1-163-227-11	s	CERAMIC, CHIP 10pF 5% 50V	*9
C350	1-126-933-11	s	ELECT 100uF 20% 16V	
C351	1-164-489-11	s	CERAMIC, CHIP 0.22uF 10% 16V	
C352	1-124-925-11	s	ELECT 2.2uF 20% 100V	
C353	1-124-925-11	s	ELECT 2.2uF 20% 100V	
*C354	1-163-120-00	s	CERAMIC, CHIP 130pF 5% 50V	*9
C355	1-163-243-11	s	CERAMIC, CHIP 47pF 5% 50V	
C356	1-163-243-11	s	CERAMIC, CHIP 47pF 5% 50V	
C357	1-163-275-11	s	CERAMIC, CHIP 0.001uF 5% 50V	
C359	1-163-033-91	s	CERAMIC, CHIP 0.022uF 50V	
C360	1-126-947-11	s	ELECT 47uF 20% 35V	
C361	1-126-947-11	s	ELECT 47uF 20% 35V	
C362	1-163-033-91	s	CERAMIC, CHIP 0.022uF 50V	

(TBC-28P BOARD(for PAL))

Ref. No. or Q'ty	Part No.	SP	Description	
C363	1-126-947-11	s	ELECT 47uF 20% 35V	
C364	1-163-033-91	s	CERAMIC, CHIP 0.022uF 50V	
C400	1-126-947-11	s	ELECT 47uF 20% 35V	
C401	1-163-033-91	s	CERAMIC, CHIP 0.022uF 50V	
C402	1-163-033-91	s	CERAMIC, CHIP 0.022uF 50V	
C404	1-163-033-91	s	CERAMIC, CHIP 0.022uF 50V	
C405	1-126-947-11	s	ELECT 47uF 20% 35V	
C406	1-163-033-91	s	CERAMIC, CHIP 0.022uF 50V	
C407	1-163-222-11	s	CERAMIC, CHIP 5pF 50V	
C408	1-163-102-00	s	CERAMIC, CHIP 24pF 5% 50V	
C409	1-163-243-11	s	CERAMIC, CHIP 47pF 5% 50V	
C410	1-126-947-11	s	ELECT 47uF 20% 35V	
C411	1-163-106-00	s	CERAMIC, CHIP 36pF 5% 50V	
C412	1-163-120-00	s	CERAMIC, CHIP 130pF 5% 50V	
C413	1-163-263-11	s	CERAMIC, CHIP 330pF 5% 50V	
C414-419	1-163-033-91	s	CERAMIC, CHIP 0.022uF 50V	
C420	1-163-239-11	s	CERAMIC, CHIP 33pF 5% 50V	
C421	1-163-125-00	s	CERAMIC, CHIP 220pF 5% 50V	
C424	1-164-004-11	s	CERAMIC, CHIP 0.1uF 10% 25V	
C425	1-164-232-11	s	CERAMIC, CHIP 0.01uF 10% 100V	
C426	1-124-903-11	s	ELECT 1uF 20% 50V	
C427	1-163-033-91	s	CERAMIC, CHIP 0.022uF 50V	
C428	1-163-033-91	s	CERAMIC, CHIP 0.022uF 50V	
C429	1-124-903-11	s	ELECT 1uF 20% 50V	
C430	1-163-033-91	s	CERAMIC, CHIP 0.022uF 50V	
C431	1-164-004-11	s	CERAMIC, CHIP 0.1uF 10% 25V	
C432	1-164-232-11	s	CERAMIC, CHIP 0.01uF 10% 100V	
C433	1-163-263-11	s	CERAMIC, CHIP 330pF 5% 50V	
C434	1-163-243-11	s	CERAMIC, CHIP 47pF 5% 50V	
C435	1-126-933-11	s	ELECT 100uF 20% 16V	
C436	1-163-033-91	s	CERAMIC, CHIP 0.022uF 50V	
C437	1-163-133-00	s	CERAMIC, CHIP 470pF 5% 50V	
C438	1-164-232-11	s	CERAMIC, CHIP 0.01uF 10% 100V	
C439	1-163-033-91	s	CERAMIC, CHIP 0.022uF 50V	
C440	1-163-251-11	s	CERAMIC, CHIP 100pF 5% 50V	
C441	1-163-033-91	s	CERAMIC, CHIP 0.022uF 50V	
C442	1-163-263-11	s	CERAMIC, CHIP 330pF 5% 50V	
C443	1-163-125-00	s	CERAMIC, CHIP 220pF 5% 50V	
C445	1-163-243-11	s	CERAMIC, CHIP 47pF 5% 50V	
*C446	1-163-251-11	s	CERAMIC, CHIP 100pF 5% 50V	*8
	1-163-247-11	s	CERAMIC, CHIP 68pF 5% 50V	*42
	1-163-243-11	s	CERAMIC, CHIP 47pF 5% 50V	*12
C447	1-164-004-11	s	CERAMIC, CHIP 0.1uF 10% 25V	
C448	1-126-933-11	s	ELECT 100uF 20% 16V	
C449	1-164-489-11	s	CERAMIC, CHIP 0.22uF 10% 16V	
C450	1-124-925-11	s	ELECT 2.2uF 20% 100V	
C451	1-124-925-11	s	ELECT 2.2uF 20% 100V	
C452	1-163-275-11	s	CERAMIC, CHIP 0.001uF 5% 50V	
C454	1-163-033-91	s	CERAMIC, CHIP 0.022uF 50V	
C455	1-126-947-11	s	ELECT 47uF 20% 35V	
C456	1-126-947-11	s	ELECT 47uF 20% 35V	
C457	1-163-033-91	s	CERAMIC, CHIP 0.022uF 50V	
C458	1-126-947-11	s	ELECT 47uF 20% 35V	
C459	1-163-033-91	s	CERAMIC, CHIP 0.022uF 50V	
C461	1-163-033-91	s	CERAMIC, CHIP 0.022uF 50V	
C462	1-163-102-00	s	CERAMIC, CHIP 24pF 5% 50V	
*C463	1-163-227-11	s	CERAMIC, CHIP 10pF 5% 50V	*9
*C464	1-163-227-11	s	CERAMIC, CHIP 10pF 5% 50V	*9

Note: In this list * marked parts are design changed.
Refer to pages 18-29 to 18-31 for applicable serial numbers.

(TBC-28P BOARD(for PAL))

Ref. No. or Q'ty	Part No.	SP	Description	
*C465	1-163-121-00	s	CERAMIC, CHIP 150pF 5% 50V	*9
C501	1-163-125-00	s	CERAMIC, CHIP 220pF 5% 50V	
C502	1-163-125-00	s	CERAMIC, CHIP 220pF 5% 50V	
C503	1-163-033-91	s	CERAMIC, CHIP 0.022uF 50V	
C504	1-163-033-91	s	CERAMIC, CHIP 0.022uF 50V	
C505	1-163-033-91	s	CERAMIC, CHIP 0.022uF 50V	
C506	1-163-033-91	s	CERAMIC, CHIP 0.022uF 50V	
C507	1-126-947-11	s	ELECT 47uF 20% 35V	
C508	1-163-033-91	s	CERAMIC, CHIP 0.022uF 50V	
C509	1-163-033-91	s	CERAMIC, CHIP 0.022uF 50V	
C510	1-163-033-91	s	CERAMIC, CHIP 0.022uF 50V	
C511	1-163-033-91	s	CERAMIC, CHIP 0.022uF 50V	
C512	1-163-125-00	s	CERAMIC, CHIP 220pF 5% 50V	
C513	1-163-033-91	s	CERAMIC, CHIP 0.022uF 50V	
C514	1-163-251-11	s	CERAMIC, CHIP 100pF 5% 50V	
C516	1-163-033-91	s	CERAMIC, CHIP 0.022uF 50V	
C517	1-126-947-11	s	ELECT 47uF 20% 35V	
C524	1-164-004-11	s	CERAMIC, CHIP 0.1uF 10% 25V	
C525	1-164-004-11	s	CERAMIC, CHIP 0.1uF 10% 25V	
C526	1-164-004-11	s	CERAMIC, CHIP 0.1uF 10% 25V	
C528	1-164-004-11	s	CERAMIC, CHIP 0.1uF 10% 25V	
C529	1-163-033-91	s	CERAMIC, CHIP 0.022uF 50V	
C530	1-164-004-11	s	CERAMIC, CHIP 0.1uF 10% 25V	
C531	1-163-033-91	s	CERAMIC, CHIP 0.022uF 50V	
C532	1-164-004-11	s	CERAMIC, CHIP 0.1uF 10% 25V	
C533	1-163-033-91	s	CERAMIC, CHIP 0.022uF 50V	
C534	1-163-033-91	s	CERAMIC, CHIP 0.022uF 50V	
C535	1-163-033-91	s	CERAMIC, CHIP 0.022uF 50V	
C536	1-163-033-91	s	CERAMIC, CHIP 0.022uF 50V	
C537	1-126-947-11	s	ELECT 47uF 20% 35V	
C538	1-126-947-11	s	ELECT 47uF 20% 35V	
C539	1-163-033-91	s	CERAMIC, CHIP 0.022uF 50V	
C540	1-163-033-91	s	CERAMIC, CHIP 0.022uF 50V	
C542	1-126-947-11	s	ELECT 47uF 20% 35V	
C543	1-126-947-11	s	ELECT 47uF 20% 35V	
C544	1-163-033-91	s	CERAMIC, CHIP 0.022uF 50V	
C546	1-163-243-11	s	CERAMIC, CHIP 47pF 5% 50V	
C547-552	1-163-033-91	s	CERAMIC, CHIP 0.022uF 50V	
*C554	1-163-227-11	s	CERAMIC, CHIP 10pF 5% 50V	*9
*C555	1-163-227-11	s	CERAMIC, CHIP 10pF 5% 50V	*9
C700	1-163-033-91	s	CERAMIC, CHIP 0.022uF 50V	
C701	1-164-232-11	s	CERAMIC, CHIP 0.01uF 10% 100V	
C702	1-163-275-11	s	CERAMIC, CHIP 0.001uF 5% 50V	
C703	1-131-345-00	s	TANTALUM 0.47uF 10% 35V	
C704	1-163-239-11	s	CERAMIC, CHIP 33pF 5% 50V	
C705	1-163-125-00	s	CERAMIC, CHIP 220pF 5% 50V	
C706	1-163-033-91	s	CERAMIC, CHIP 0.022uF 50V	
C707	1-164-004-11	s	CERAMIC, CHIP 0.1uF 10% 25V	
C708	1-126-947-11	s	ELECT 47uF 20% 35V	
C709	1-163-033-91	s	CERAMIC, CHIP 0.022uF 50V	
C710	1-163-033-91	s	CERAMIC, CHIP 0.022uF 50V	
C711	1-163-033-91	s	CERAMIC, CHIP 0.022uF 50V	
C712	1-163-033-91	s	CERAMIC, CHIP 0.022uF 50V	
*C713	1-163-237-11	s	CERAMIC, CHIP 27pF 5% 50V	*1
	1-163-241-11	s	CERAMIC, CHIP 39pF 5% 50V	*40
	1-163-106-00	s	CERAMIC, CHIP 36pF 5% 50V	*9
*C714	1-163-251-11	s	CERAMIC, CHIP 100pF 5% 50V	*1
	1-163-102-00	s	CERAMIC, CHIP 24pF 5% 50V	*2

(TBC-28P BOARD(for PAL))

Ref. No. or Q'ty	Part No.	SP	Description	
C715	1-164-232-11	s	CERAMIC, CHIP 0.01uF 10% 100V	
C716	1-163-235-11	s	CERAMIC, CHIP 22pF 5% 50V	
C717	1-163-263-11	s	CERAMIC, CHIP 330pF 5% 50V	
C718	1-163-033-91	s	CERAMIC, CHIP 0.022uF 50V	
C719	1-126-947-11	s	ELECT 47uF 20% 35V	
C720	1-163-809-11	s	CERAMIC, CHIP 0.047uF 10% 25V	
C721	1-163-033-91	s	CERAMIC, CHIP 0.022uF 50V	
C722	1-163-033-91	s	CERAMIC, CHIP 0.022uF 50V	
C723	1-163-033-91	s	CERAMIC, CHIP 0.022uF 50V	
C724	1-163-243-11	s	CERAMIC, CHIP 47pF 5% 50V	
C725	1-163-243-11	s	CERAMIC, CHIP 47pF 5% 50V	
C726	1-163-033-91	s	CERAMIC, CHIP 0.022uF 50V	
C727	1-126-947-11	s	ELECT 47uF 20% 35V	
C728	1-163-033-91	s	CERAMIC, CHIP 0.022uF 50V	
C729	1-163-033-91	s	CERAMIC, CHIP 0.022uF 50V	
C730	1-163-249-11	s	CERAMIC, CHIP 82pF 5% 50V	
C731	1-163-033-91	s	CERAMIC, CHIP 0.022uF 50V	
C732	1-164-004-11	s	CERAMIC, CHIP 0.1uF 10% 25V	
C733	1-164-004-11	s	CERAMIC, CHIP 0.1uF 10% 25V	
C734	1-164-004-11	s	CERAMIC, CHIP 0.1uF 10% 25V	
C735	1-164-004-11	s	CERAMIC, CHIP 0.1uF 10% 25V	
C736	1-163-121-00	s	CERAMIC, CHIP 150pF 5% 50V	
C738	1-163-033-91	s	CERAMIC, CHIP 0.022uF 50V	
C739	1-126-947-11	s	ELECT 47uF 20% 35V	
C740	1-163-102-00	s	CERAMIC, CHIP 24pF 5% 50V	
C741	1-163-125-00	s	CERAMIC, CHIP 220pF 5% 50V	
C742	1-163-033-91	s	CERAMIC, CHIP 0.022uF 50V	
C743	1-131-353-00	s	TANTALUM 10uF 10% 35V	
*C744	1-163-033-91	s	CERAMIC, CHIP 0.022uF 50V	*15
C745	1-163-231-11	s	CERAMIC, CHIP 15pF 5% 50V	
C747	1-164-004-11	s	CERAMIC, CHIP 0.1uF 10% 25V	
*C748	1-163-237-11	s	CERAMIC, CHIP 27pF 5% 50V	*1
	1-163-241-11	s	CERAMIC, CHIP 39pF 5% 50V	*40
	1-163-106-00	s	CERAMIC, CHIP 36pF 5% 50V	*9
*C750	1-163-251-11	s	CERAMIC, CHIP 100pF 5% 50V	*1
	1-163-102-00	s	CERAMIC, CHIP 24pF 5% 50V	*2
*C751	1-163-227-11	s	CERAMIC, CHIP 10pF 5% 50V	*10
	1-163-241-11	s	CERAMIC, CHIP 39pF 5% 50V	*11
C752	1-164-232-11	s	CERAMIC, CHIP 0.01uF 10% 100V	
C753	1-126-947-11	s	ELECT 47uF 20% 35V	
C754	1-163-263-11	s	CERAMIC, CHIP 330pF 5% 50V	
C755	1-163-033-91	s	CERAMIC, CHIP 0.022uF 50V	
C756	1-163-809-11	s	CERAMIC, CHIP 0.047uF 10% 25V	
C757	1-163-239-11	s	CERAMIC, CHIP 33pF 5% 50V	
C758	1-126-947-11	s	ELECT 47uF 20% 35V	
C759	1-164-004-11	s	CERAMIC, CHIP 0.1uF 10% 25V	
C760	1-163-243-11	s	CERAMIC, CHIP 47pF 5% 50V	
C761	1-163-033-91	s	CERAMIC, CHIP 0.022uF 50V	
C762	1-163-033-91	s	CERAMIC, CHIP 0.022uF 50V	
C763	1-126-947-11	s	ELECT 47uF 20% 35V	
C764	1-163-033-91	s	CERAMIC, CHIP 0.022uF 50V	
C765	1-124-903-11	s	ELECT 1uF 20% 50V	
C766	1-163-033-91	s	CERAMIC, CHIP 0.022uF 50V	
C767	1-126-947-11	s	ELECT 47uF 20% 35V	
C768	1-163-033-91	s	CERAMIC, CHIP 0.022uF 50V	
C769	1-163-033-91	s	CERAMIC, CHIP 0.022uF 50V	
C770	1-126-947-11	s	ELECT 47uF 20% 35V	

Note: In this list * marked parts are design changed.
Refer to pages 18-29 to 18-31 for applicable serial numbers.

(TBC-28P BOARD(for PAL))

Ref. No. or Q'ty	Part No.	SP	Description	
C771	1-163-033-91	s	CERAMIC, CHIP 0.022uF 50V	
C772	1-163-231-11	s	CERAMIC, CHIP 15pF 5% 50V	
C773	1-163-125-00	s	CERAMIC, CHIP 220pF 5% 50V	
C774	1-163-231-11	s	CERAMIC, CHIP 15pF 5% 50V	
C775	1-163-125-00	s	CERAMIC, CHIP 220pF 5% 50V	
C776	1-163-033-91	s	CERAMIC, CHIP 0.022uF 50V	
C777	1-164-232-11	s	CERAMIC, CHIP 0.01uF 10% 100V	
C778	1-163-033-91	s	CERAMIC, CHIP 0.022uF 50V	
C779	1-163-113-00	s	CERAMIC, CHIP 68pF 5% 50V	
C780	1-163-231-11	s	CERAMIC, CHIP 15pF 5% 50V	
C781	1-164-004-11	s	CERAMIC, CHIP 0.1uF 10% 25V	
C782	1-163-033-91	s	CERAMIC, CHIP 0.022uF 50V	
C783	1-163-033-91	s	CERAMIC, CHIP 0.022uF 50V	
C784	1-164-004-11	s	CERAMIC, CHIP 0.1uF 10% 25V	
C785	1-163-033-91	s	CERAMIC, CHIP 0.022uF 50V	
C786	1-163-243-11	s	CERAMIC, CHIP 47pF 5% 50V	
C787	1-163-125-00	s	CERAMIC, CHIP 220pF 5% 50V	
C788	1-163-033-91	s	CERAMIC, CHIP 0.022uF 50V	
C789	1-164-004-11	s	CERAMIC, CHIP 0.1uF 10% 25V	
C790	1-126-947-11	s	ELECT 47uF 20% 35V	
C792	1-164-004-11	s	CERAMIC, CHIP 0.1uF 10% 25V	
C793	1-163-235-11	s	CERAMIC, CHIP 22pF 5% 50V	
C794	1-131-345-00	s	TANTALUM 0.47uF 10% 35V	
C795	1-131-353-00	s	TANTALUM 10uF 10% 35V	
C796	1-163-033-91	s	CERAMIC, CHIP 0.022uF 50V	
C797	1-126-947-11	s	ELECT 47uF 20% 35V	
C798	1-163-033-91	s	CERAMIC, CHIP 0.022uF 50V	
C799	1-163-033-91	s	CERAMIC, CHIP 0.022uF 50V	
C800	1-163-033-91	s	CERAMIC, CHIP 0.022uF 50V	
C801	1-163-033-91	s	CERAMIC, CHIP 0.022uF 50V	
*C802	1-163-237-11	s	CERAMIC, CHIP 27pF 5% 50V	*1
	1-163-241-11	s	CERAMIC, CHIP 39pF 5% 50V	*40
	1-163-106-00	s	CERAMIC, CHIP 36pF 5% 50V	*9
*C803	1-163-251-11	s	CERAMIC, CHIP 100pF 5% 50V	*1
	1-163-102-00	s	CERAMIC, CHIP 24pF 5% 50V	*2
C804	1-164-232-11	s	CERAMIC, CHIP 0.01uF 10% 100V	
C805	1-163-263-11	s	CERAMIC, CHIP 330pF 5% 50V	
C806	1-163-809-11	s	CERAMIC, CHIP 0.047uF 10% 25V	
C807	1-164-004-11	s	CERAMIC, CHIP 0.1uF 10% 25V	
C808	1-163-275-11	s	CERAMIC, CHIP 0.001uF 5% 50V	
*C809	1-163-809-11	s	CERAMIC, CHIP 0.047uF 10% 25V	*9
*C810	1-163-809-11	s	CERAMIC, CHIP 0.047uF 10% 25V	*9
CN1	1-564-005-11	o	CONNECTOR 6P, MALE	
CN2	1-564-005-11	o	CONNECTOR 6P, MALE	
CN105	1-573-782-21	o	CONNECTOR, PHEC 60P, MALE	
CN106	1-573-782-21	o	CONNECTOR, PHEC 60P, MALE	
*CV700	1-141-442-91	s	CAP, TRIMMER 20pF	*8
	1-141-443-11	s	CAP, TRIMMER 30pF	*9
*CV701	1-141-442-91	s	CAP, TRIMMER 20pF	*8
	1-141-443-11	s	CAP, TRIMMER 30pF	*9
*CV702	1-141-442-91	s	CAP, TRIMMER 20pF	*8
	1-141-443-11	s	CAP, TRIMMER 30pF	*9
D1	8-719-941-04	s	DIODE SB007-03CP	
D2	8-719-941-04	s	DIODE SB007-03CP	
D100	8-719-941-23	s	DIODE DA204U	
D101	8-719-123-82	s	DIODE 1SS303-T1	

(TBC-28P BOARD(for PAL))

Ref. No. or Q'ty	Part No.	SP	Description	
D102	8-719-123-85	s	DIODE 1SS304	
D200	8-719-941-23	s	DIODE DA204U	
D301	8-719-941-23	s	DIODE DA204U	
D302	8-719-105-38	s	DIODE RD3.0M-B1	
D303	8-719-041-39	s	DIODE KV1470	
D304	8-719-041-39	s	DIODE KV1470	
D305	8-719-941-23	s	DIODE DA204U	
D401	8-719-941-23	s	DIODE DA204U	
D402	8-719-105-38	s	DIODE RD3.0M-B1	
D403	8-719-041-39	s	DIODE KV1470	
D404	8-719-041-39	s	DIODE KV1470	
D502	8-719-123-82	s	DIODE 1SS303-T1	
D503	8-719-123-82	s	DIODE 1SS303-T1	
D505	8-719-123-85	s	DIODE 1SS304	
D506	8-719-123-85	s	DIODE 1SS304	
*D700	8-713-300-88	s	DIODE 1T33C-01	*8
	8-719-002-81	s	DIODE 1T363A-M20-T8A	*9
*D703	8-713-300-88	s	DIODE 1T33C-01	*8
	8-719-002-81	s	DIODE 1T363A-M20-T8A	*9
*D704	8-713-300-88	s	DIODE 1T33C-01	*8
	8-719-002-81	s	DIODE 1T363A-M20-T8A	*9
D705	8-719-123-85	s	DIODE 1SS304	
D706	8-719-123-82	s	DIODE 1SS303-T1	
FL500	1-239-769-11	s	FILTER, LOW-PASS 5MHz	
FL501	1-239-767-11	s	FILTER, LOW-PASS 2MHz	
FL502	1-239-767-11	s	FILTER, LOW-PASS 2MHz	
IC1	8-759-168-20	s	IC TA78L09S	
IC2	8-759-168-20	s	IC TA78L09S	
IC3	8-759-822-95	s	IC L79M05T-FA	
IC4	8-759-822-95	s	IC L79M05T-FA	
IC5	8-759-182-84	s	IC PQ05SZ5U	
IC6	8-759-182-84	s	IC PQ05SZ5U	
IC7	8-759-182-84	s	IC PQ05SZ5U	
*IC8	8-759-700-65	s	IC NJM79L05A	*8
IC100	8-759-030-74	s	IC SC14S66FEL	
IC101	8-759-981-48	s	IC NJM082M	
IC102	8-759-908-15	s	IC TL431CLP	
IC103	8-752-334-55	s	IC CXD1175M	
IC200	8-759-030-74	s	IC SC14S66FEL	
IC203	8-752-334-55	s	IC CXD1175M	
IC300	8-759-702-08	s	IC NJM360M	
IC301	8-752-339-03	s	IC CXD2207Q	
IC302	8-759-300-71	s	IC HD14053BFP	
IC303	8-759-100-96	s	IC UPC4558G2	
IC304	8-759-100-96	s	IC UPC4558G2	
IC305	8-759-941-27	s	IC MB4002PF	
IC306	8-759-907-81	s	IC SN74LS221NS	
IC307	8-759-991-85	s	IC 74F00SJ	
IC308	8-759-030-74	s	IC SC14S66FEL	
IC309	8-759-981-48	s	IC NJM082M	
*IC310	8-759-035-93	s	IC TC7S32F-TE85L	*9
IC400	8-759-702-08	s	IC NJM360M	
IC401	8-752-339-03	s	IC CXD2207Q	
IC402	8-759-100-96	s	IC UPC4558G2	
IC403	8-759-100-96	s	IC UPC4558G2	
*IC404	8-759-194-31	s	IC MB4002PF-ER	*10
	8-759-702-08	s	IC NJM360M	*11

Note: In this list * marked parts are design changed.
Refer to pages 18-29 to 18-31 for applicable serial numbers.

(TBC-28P BOARD(for PAL))

Ref. No. or Q'ty	Part No.	SP	Description	
IC405	8-759-907-81	s	IC SN74LS221NS	
IC406	8-759-926-24	s	IC SN74HC164ANS	
IC407	8-759-991-85	s	IC 74F00SJ	
IC408	8-759-030-74	s	IC SC14S66FEL	
*IC409	8-759-035-93	s	IC TC7S32F-TE85L	*11
IC501	8-752-362-70	s	IC CXD101-106Q	
IC502	8-752-362-70	s	IC CXD101-106Q	
IC503	8-759-055-71	s	IC CXD8313Q	
IC504	8-759-055-71	s	IC CXD8313Q	
IC505	8-752-340-52	s	IC CXK48324Q	
IC506	8-759-926-55	s	IC SN74HC266NS	
IC507	8-759-147-05	s	IC UPD42101G-3	
IC508	8-752-340-52	s	IC CXK48324Q	
IC509	8-759-927-46	s	IC SN74HC00ANS	
IC510	8-759-926-77	s	IC SN74HC541ANS	
IC511	8-759-925-78	s	IC SN74HC10ANS	
IC512	8-759-926-18	s	IC SN74HC157ANS	
IC513	8-759-926-18	s	IC SN74HC157ANS	
IC514	8-759-239-55	s	IC TC74HC123AF	
IC516	8-759-981-48	s	IC NJM082M	
IC518	8-752-363-43	s	IC CXD1171M-1-TH	
IC519	8-752-363-43	s	IC CXD1171M-1-TH	
IC520	8-752-363-43	s	IC CXD1171M-1-TH	
IC522	8-759-926-24	s	IC SN74HC164ANS	
IC523	8-759-925-85	s	IC SN74HC32ANS	
IC524	8-759-926-18	s	IC SN74HC157ANS	
IC525	8-759-926-18	s	IC SN74HC157ANS	
IC526	8-759-926-18	s	IC SN74HC157ANS	
IC527	8-759-926-18	s	IC SN74HC157ANS	
IC528	8-759-925-90	s	IC SN74HC74ANS	
IC700	8-759-300-71	s	IC HD14053BFP	
IC701	8-759-981-48	s	IC NJM082M	
*IC702	8-759-908-15	s	IC TL431CLP	*9
IC703	8-759-987-27	s	IC LM1881M	
IC704	8-752-332-67	s	IC CXD1217M	
IC705	8-759-239-23	s	IC TC74HC86AF	
IC706	8-759-702-08	s	IC NJM360M	
IC707	8-759-100-96	s	IC UPC4558G2	
IC708	8-759-908-15	s	IC TL431CLP	
IC709	8-759-239-55	s	IC TC74HC123AF	
IC710	8-759-239-55	s	IC TC74HC123AF	
IC711	8-759-925-74	s	IC TC74HC04ANS	
IC712	8-759-250-81	s	IC TC5081AP	
IC713	8-752-335-47	s	IC CXD1216M	
IC714	8-759-336-06	s	IC MC68HC05C4-SC412511FU	
IC715	8-759-300-71	s	IC HD14053BFP	
IC716	8-759-925-76	s	IC SN74HC08ANS	
*IC717	8-759-031-84	s	IC TC7S04F	*11
IC718	8-759-031-84	s	IC TC7S04F	
IC719	8-759-031-84	s	IC TC7S04F	
IC720	8-759-925-90	s	IC SN74HC74ANS	
IC721	8-759-239-55	s	IC TC74HC123AF	
IC722	8-752-343-03	s	IC CXD2214Q	
IC723	8-759-925-85	s	IC SN74HC32ANS	
*IC724	8-759-925-90	s	IC SN74HC74ANS	*15
IC728	8-759-035-93	s	IC TC7S32F-TE85L	
IC729	8-759-927-46	s	IC SN74HC00ANS	

(TBC-28P BOARD(for PAL))

Ref. No. or Q'ty	Part No.	SP	Description	
IC730	8-759-925-90	s	IC SN74HC74ANS	
IC732	8-759-031-84	s	IC TC7S04F	
L1-5	1-412-533-21	s	INDUCTOR 47uH	
L100	1-410-478-11	s	INDUCTOR 47uH	
L101	1-410-476-11	s	INDUCTOR 33uH	
L102	1-410-478-11	s	INDUCTOR 47uH	
L103	1-410-478-11	s	INDUCTOR 47uH	
L200	1-410-478-11	s	INDUCTOR 47uH	
L201	1-410-476-11	s	INDUCTOR 33uH	
L202	1-410-478-11	s	INDUCTOR 47uH	
L203	1-410-478-11	s	INDUCTOR 47uH	
L300	1-410-478-11	s	INDUCTOR 47uH	
L301	1-410-478-11	s	INDUCTOR 47uH	
L302	1-408-621-31	s	INDUCTOR 330uH	
L303	1-410-492-11	s	INDUCTOR 680uH	
L304	1-408-419-00	s	INDUCTOR 68uH	
L305	1-410-478-11	s	INDUCTOR 47uH	
L306	1-410-478-11	s	INDUCTOR 47uH	
L307	1-408-406-00	s	INDUCTOR 5.6uH	
L308	1-408-411-00	s	INDUCTOR 15uH	
L400	1-410-478-11	s	INDUCTOR 47uH	
L401	1-410-478-11	s	INDUCTOR 47uH	
L402	1-408-411-00	s	INDUCTOR 15uH	
L403	1-410-476-11	s	INDUCTOR 33uH	
L404	1-410-482-31	s	INDUCTOR 100uH	
L405	1-408-425-00	s	INDUCTOR 220uH	
L406	1-408-416-00	s	INDUCTOR 39uH	
L407	1-410-478-11	s	INDUCTOR 47uH	
L408	1-410-478-11	s	INDUCTOR 47uH	
L500-505	1-410-478-11	s	INDUCTOR 47uH	
L700	1-410-482-31	s	INDUCTOR 100uH	
L701	1-408-419-00	s	INDUCTOR 68uH	
L702	1-410-478-11	s	INDUCTOR 47uH	
L703	1-410-478-11	s	INDUCTOR 47uH	
L704	1-410-478-11	s	INDUCTOR 47uH	
L705	1-410-478-11	s	INDUCTOR 47uH	
L706	1-408-413-00	s	INDUCTOR 22uH	
L707	1-408-411-00	s	INDUCTOR 15uH	
L708	1-410-478-11	s	INDUCTOR 47uH	
L709	1-410-478-11	s	INDUCTOR 47uH	
L711	1-410-482-31	s	INDUCTOR 100uH	
L712	1-410-482-31	s	INDUCTOR 100uH	
L713	1-410-478-11	s	INDUCTOR 47uH	
L714	1-410-478-11	s	INDUCTOR 47uH	
L715	1-410-478-11	s	INDUCTOR 47uH	
L716	1-410-478-11	s	INDUCTOR 47uH	
LV300	1-406-746-11	s	INDUCTOR, VAR 22uH	
*LV400	1-406-746-11	s	INDUCTOR, VAR 22uH	*10
	1-406-745-11	s	INDUCTOR, VAR 6.8uH	*11
Q100	8-729-117-32	s	TRANSISTOR 2SC4177	
Q101	8-729-117-32	s	TRANSISTOR 2SC4177	
Q102	8-729-117-32	s	TRANSISTOR 2SC4177	
Q103	8-729-118-56	s	TRANSISTOR 2SK852-X2	
Q104	8-729-140-63	s	TRANSISTOR 2SA1611-M5M6	
Q200	8-729-117-32	s	TRANSISTOR 2SC4177	
Q201	8-729-117-32	s	TRANSISTOR 2SC4177	
Q202	8-729-117-32	s	TRANSISTOR 2SC4177	
Q203	8-729-118-56	s	TRANSISTOR 2SK852-X2	

Note: In this list * marked parts are design changed.
Refer to pages 18-29 to 18-31 for applicable serial numbers.

(TBC-28P BOARD(for PAL))

Ref. No. or Q'ty	Part No.	SP	Description	
Q300	8-729-117-32	s	TRANSISTOR 2SC4177	
Q301	8-729-117-32	s	TRANSISTOR 2SC4177	
Q302	8-729-117-32	s	TRANSISTOR 2SC4177	
Q303	8-729-140-63	s	TRANSISTOR 2SA1611-M5M6	
Q304	8-729-140-47	s	TRANSISTOR 2SC3735-B34	
Q305	8-729-140-63	s	TRANSISTOR 2SA1611-M5M6	
Q306	8-729-117-32	s	TRANSISTOR 2SC4177	
Q400	8-729-117-32	s	TRANSISTOR 2SC4177	
Q401	8-729-117-32	s	TRANSISTOR 2SC4177	
Q402	8-729-117-32	s	TRANSISTOR 2SC4177	
Q403	8-729-117-32	s	TRANSISTOR 2SC4177	
Q404	8-729-140-63	s	TRANSISTOR 2SA1611-M5M6	
Q405	8-729-140-47	s	TRANSISTOR 2SC3735-B34	
Q406	8-729-140-63	s	TRANSISTOR 2SA1611-M5M6	
Q407	8-729-117-32	s	TRANSISTOR 2SC4177	
Q501	8-729-140-63	s	TRANSISTOR 2SA1611-M5M6	
Q502	8-729-117-32	s	TRANSISTOR 2SC4177	
Q503	8-729-117-32	s	TRANSISTOR 2SC4177	
Q700	8-729-140-63	s	TRANSISTOR 2SA1611-M5M6	
Q701	8-729-117-32	s	TRANSISTOR 2SC4177	
Q702	8-729-907-26	s	TRANSISTOR IMX1	
Q703	8-729-140-63	s	TRANSISTOR 2SA1611-M5M6	
Q704	8-729-117-32	s	TRANSISTOR 2SC4177	
Q705	8-729-117-32	s	TRANSISTOR 2SC4177	
Q706	8-729-117-32	s	TRANSISTOR 2SC4177	
Q707	8-729-907-46	s	TRANSISTOR IMZ1	
*Q708	8-729-201-27	s	TRANSISTOR 2SC2715-Y	*3
	8-729-120-28	s	TRANSISTOR 2SC1623-L5L6	*43
	8-729-117-32	s	TRANSISTOR 2SC4177	*9
Q709	8-729-140-47	s	TRANSISTOR 2SC3735-B34	
Q710	8-729-143-14	s	TRANSISTOR 2SC4176-B35	
Q711	8-729-140-63	s	TRANSISTOR 2SA1611-M5M6	
Q712	8-729-117-32	s	TRANSISTOR 2SC4177	
Q713	8-729-143-14	s	TRANSISTOR 2SC4176-B35	
Q714	8-729-140-63	s	TRANSISTOR 2SA1611-M5M6	
Q715	8-729-140-63	s	TRANSISTOR 2SA1611-M5M6	
Q716	8-729-140-63	s	TRANSISTOR 2SA1611-M5M6	
*Q717	8-729-201-27	s	TRANSISTOR 2SC2715-Y	*3
	8-729-120-28	s	TRANSISTOR 2SC1623-L5L6	*43
	8-729-117-32	s	TRANSISTOR 2SC4177	*9
Q718	8-729-140-47	s	TRANSISTOR 2SC3735-B34	
*Q721	8-729-201-27	s	TRANSISTOR 2SC2715-Y	*3
	8-729-120-28	s	TRANSISTOR 2SC1623-L5L6	*43
	8-729-117-32	s	TRANSISTOR 2SC4177	*9
Q722	8-729-140-47	s	TRANSISTOR 2SC3735-B34	
*Q723	8-729-907-46	s	TRANSISTOR IMZ1	*9
R100	1-216-638-11	s	METAL, CHIP 300 0.5% 1/10W	
R101	1-216-025-91	s	METAL, CHIP 100 5% 1/10W	
R102	1-216-659-11	s	METAL, CHIP 2.2k 0.5% 1/10W	
R103	1-216-041-00	s	METAL, CHIP 470 5% 1/10W	
R104	1-216-033-00	s	METAL, CHIP 220 5% 1/10W	
R105	1-216-049-91	s	METAL, CHIP 1k 5% 1/10W	
R106	1-216-652-11	s	METAL, CHIP 1.1k 0.5% 1/10W	
R107	1-216-652-11	s	METAL, CHIP 1.1k 0.5% 1/10W	
R108	1-216-059-00	s	METAL, CHIP 2.7k 5% 1/10W	
R109	1-216-025-91	s	METAL, CHIP 100 5% 1/10W	
R110	1-216-093-00	s	METAL, CHIP 68k 5% 1/10W	

(TBC-28P BOARD(for PAL))

Ref. No. or Q'ty	Part No.	SP	Description	
R111	1-216-061-00	s	METAL, CHIP 3.3k 5% 1/10W	
R112	1-216-049-91	s	METAL, CHIP 1k 5% 1/10W	
R113	1-216-017-91	s	METAL, CHIP 47 5% 1/10W	
R114	1-216-073-00	s	METAL, CHIP 10k 5% 1/10W	
R115	1-216-097-91	s	METAL, CHIP 100k 5% 1/10W	
R116	1-216-057-00	s	METAL, CHIP 2.2k 5% 1/10W	
R117	1-216-041-00	s	METAL, CHIP 470 5% 1/10W	
R118	1-216-073-00	s	METAL, CHIP 10k 5% 1/10W	
R119	1-216-037-00	s	METAL, CHIP 330 5% 1/10W	
R120	1-216-033-00	s	METAL, CHIP 220 5% 1/10W	
R121	1-216-033-00	s	METAL, CHIP 220 5% 1/10W	
R122	1-216-017-91	s	METAL, CHIP 47 5% 1/10W	
R123	1-216-073-00	s	METAL, CHIP 10k 5% 1/10W	
*R124	1-216-065-00	s	METAL, CHIP 4.7k 5% 1/10W	*9
*R125	1-216-059-00	s	METAL, CHIP 2.7k 5% 1/10W	*9
R200	1-216-638-11	s	METAL, CHIP 300 0.5% 1/10W	
R201	1-216-025-91	s	METAL, CHIP 100 5% 1/10W	
R202	1-216-659-11	s	METAL, CHIP 2.2k 0.5% 1/10W	
R203	1-216-041-00	s	METAL, CHIP 470 5% 1/10W	
R204	1-216-033-00	s	METAL, CHIP 220 5% 1/10W	
R205	1-216-049-91	s	METAL, CHIP 1k 5% 1/10W	
R206	1-216-652-11	s	METAL, CHIP 1.1k 0.5% 1/10W	
R207	1-216-652-11	s	METAL, CHIP 1.1k 0.5% 1/10W	
R208	1-216-059-00	s	METAL, CHIP 2.7k 5% 1/10W	
R209	1-216-025-91	s	METAL, CHIP 100 5% 1/10W	
R210	1-216-081-00	s	METAL, CHIP 22k 5% 1/10W	
R211	1-216-073-00	s	METAL, CHIP 10k 5% 1/10W	
R212	1-216-049-91	s	METAL, CHIP 1k 5% 1/10W	
R213	1-216-017-91	s	METAL, CHIP 47 5% 1/10W	
R214	1-216-073-00	s	METAL, CHIP 10k 5% 1/10W	
R215	1-216-097-91	s	METAL, CHIP 100k 5% 1/10W	
R222	1-216-017-91	s	METAL, CHIP 47 5% 1/10W	
R223	1-216-073-00	s	METAL, CHIP 10k 5% 1/10W	
R301	1-216-049-91	s	METAL, CHIP 1k 5% 1/10W	
R302	1-216-085-00	s	METAL, CHIP 33k 5% 1/10W	
R303	1-216-065-00	s	METAL, CHIP 4.7k 5% 1/10W	
R304	1-216-073-00	s	METAL, CHIP 10k 5% 1/10W	
R305	1-216-085-00	s	METAL, CHIP 33k 5% 1/10W	
R306	1-216-017-91	s	METAL, CHIP 47 5% 1/10W	
R307	1-216-051-00	s	METAL, CHIP 1.2k 5% 1/10W	
R308	1-216-025-91	s	METAL, CHIP 100 5% 1/10W	
R309	1-216-057-00	s	METAL, CHIP 2.2k 5% 1/10W	
R310	1-216-033-00	s	METAL, CHIP 220 5% 1/10W	
R311	1-216-049-91	s	METAL, CHIP 1k 5% 1/10W	
R312	1-216-057-00	s	METAL, CHIP 2.2k 5% 1/10W	
R313	1-216-059-00	s	METAL, CHIP 2.7k 5% 1/10W	
R314	1-216-049-91	s	METAL, CHIP 1k 5% 1/10W	
R315	1-216-089-91	s	METAL, CHIP 47k 5% 1/10W	
R316	1-216-049-91	s	METAL, CHIP 1k 5% 1/10W	
R317	1-216-071-00	s	METAL, CHIP 8.2k 5% 1/10W	
R318	1-216-041-00	s	METAL, CHIP 470 5% 1/10W	
R319	1-208-806-11	s	METAL, CHIP 10k 0.5% 1/10W	
R320	1-216-295-91	s	RES, CHIP 0	
R321	1-216-065-00	s	METAL, CHIP 4.7k 5% 1/10W	
R322	1-216-677-11	s	METAL, CHIP 12k 0.5% 1/10W	
R323	1-216-033-00	s	METAL, CHIP 220 5% 1/10W	
R324	1-216-033-00	s	METAL, CHIP 220 5% 1/10W	
R325	1-216-117-00	s	METAL, CHIP 680k 5% 1/10W	
R326	1-208-822-11	s	METAL, CHIP 47k 0.5% 1/10W	

Note: In this list * marked parts are design changed.
Refer to pages 18-29 to 18-31 for applicable serial numbers.

(TBC-28P BOARD(for PAL))

Ref. No. or Q'ty	Part No.	SP	Description	
R327	1-208-810-11	s	METAL, CHIP 15k 0.5% 1/10W	
R328	1-216-687-11	s	METAL, CHIP 33k 0.5% 1/10W	
R329	1-208-800-11	s	METAL, CHIP 5.6k 0.5% 1/10W	
R330	1-216-634-11	s	METAL, CHIP 200 0.5% 1/10W	
R331	1-216-025-91	s	METAL, CHIP 100 5% 1/10W	
R332	1-216-057-00	s	METAL, CHIP 2.2k 5% 1/10W	
R333	1-216-667-11	s	METAL, CHIP 4.7k 0.5% 1/10W	
R334	1-216-121-91	s	METAL, CHIP 1M 5% 1/10W	
R335	1-216-033-00	s	METAL, CHIP 220 5% 1/10W	
R336	1-216-061-00	s	METAL, CHIP 3.3k 5% 1/10W	
R337	1-216-671-11	s	METAL, CHIP 6.8k 0.5% 1/10W	
R338	1-208-810-11	s	METAL, CHIP 15k 0.5% 1/10W	
R339	1-216-073-00	s	METAL, CHIP 10k 5% 1/10W	
R340	1-216-025-91	s	METAL, CHIP 100 5% 1/10W	
R341	1-216-659-11	s	METAL, CHIP 2.2k 0.5% 1/10W	
R342	1-216-033-00	s	METAL, CHIP 220 5% 1/10W	
R343	1-216-033-00	s	METAL, CHIP 220 5% 1/10W	
R344	1-216-661-11	s	METAL, CHIP 2.7k 0.5% 1/10W	
R345	1-208-789-11	s	METAL, CHIP 2k 0.5% 1/10W	
R346	1-208-806-11	s	METAL, CHIP 10k 0.5% 1/10W	
R347	1-208-806-11	s	METAL, CHIP 10k 0.5% 1/10W	
R348	1-216-057-00	s	METAL, CHIP 2.2k 5% 1/10W	
R349	1-216-678-11	s	METAL, CHIP 13k 0.5% 1/10W	
R350	1-216-097-91	s	METAL, CHIP 100k 5% 1/10W	
R351	1-216-677-11	s	METAL, CHIP 12k 0.5% 1/10W	
R352	1-216-057-00	s	METAL, CHIP 2.2k 5% 1/10W	
R353	1-216-057-00	s	METAL, CHIP 2.2k 5% 1/10W	
R354	1-216-037-00	s	METAL, CHIP 330 5% 1/10W	
R355	1-216-037-00	s	METAL, CHIP 330 5% 1/10W	
R358	1-216-061-00	s	METAL, CHIP 3.3k 5% 1/10W	
*R359	1-208-822-11	s	METAL, CHIP 47k 0.5% 1/10W	*9
R360	1-216-109-00	s	METAL, CHIP 330k 5% 1/10W	
R361	1-216-057-00	s	METAL, CHIP 2.2k 5% 1/10W	
R363	1-216-017-91	s	METAL, CHIP 47 5% 1/10W	
R367	1-216-073-00	s	METAL, CHIP 10k 5% 1/10W	
R369	1-216-049-91	s	METAL, CHIP 1k 5% 1/10W	
R371	1-216-041-00	s	METAL, CHIP 470 5% 1/10W	
R372	1-216-041-00	s	METAL, CHIP 470 5% 1/10W	
R373	1-216-085-00	s	METAL, CHIP 33k 5% 1/10W	
R374	1-216-085-00	s	METAL, CHIP 33k 5% 1/10W	
R375	1-216-085-00	s	METAL, CHIP 33k 5% 1/10W	
R376	1-216-017-91	s	METAL, CHIP 47 5% 1/10W	
R380	1-208-814-11	s	METAL, CHIP 22k 0.5% 1/10W	
R400	1-216-085-00	s	METAL, CHIP 33k 5% 1/10W	
R401	1-216-065-00	s	METAL, CHIP 4.7k 5% 1/10W	
R402	1-216-073-00	s	METAL, CHIP 10k 5% 1/10W	
R403	1-216-085-00	s	METAL, CHIP 33k 5% 1/10W	
R404	1-216-017-91	s	METAL, CHIP 47 5% 1/10W	
R405	1-216-049-91	s	METAL, CHIP 1k 5% 1/10W	
R406	1-216-065-00	s	METAL, CHIP 4.7k 5% 1/10W	
R407	1-216-049-91	s	METAL, CHIP 1k 5% 1/10W	
R408	1-216-025-91	s	METAL, CHIP 100 5% 1/10W	
R409	1-216-049-91	s	METAL, CHIP 1k 5% 1/10W	
R410	1-216-057-00	s	METAL, CHIP 2.2k 5% 1/10W	
R411	1-216-033-00	s	METAL, CHIP 220 5% 1/10W	
R412	1-216-057-00	s	METAL, CHIP 2.2k 5% 1/10W	
R413	1-216-059-00	s	METAL, CHIP 2.7k 5% 1/10W	
R414	1-216-049-91	s	METAL, CHIP 1k 5% 1/10W	
R415	1-216-049-91	s	METAL, CHIP 1k 5% 1/10W	

(TBC-28P BOARD(for PAL))

Ref. No. or Q'ty	Part No.	SP	Description	
R416	1-216-089-91	s	METAL, CHIP 47k 5% 1/10W	
R417	1-216-041-00	s	METAL, CHIP 470 5% 1/10W	
R419	1-216-295-91	s	RES, CHIP 0	
R421	1-216-065-00	s	METAL, CHIP 4.7k 5% 1/10W	
R423	1-208-822-11	s	METAL, CHIP 47k 0.5% 1/10W	
R424	1-216-033-00	s	METAL, CHIP 220 5% 1/10W	
R425	1-216-033-00	s	METAL, CHIP 220 5% 1/10W	
R426	1-216-117-00	s	METAL, CHIP 680k 5% 1/10W	
R427	1-216-634-11	s	METAL, CHIP 200 0.5% 1/10W	
R428	1-216-627-11	s	METAL, CHIP 100 0.5% 1/10W	
R429	1-216-659-11	s	METAL, CHIP 2.2k 0.5% 1/10W	
R430	1-216-121-91	s	METAL, CHIP 1M 5% 1/10W	
*R431	1-216-679-11	s	METAL, CHIP 15k 0.5% 1/10W	*8
	1-216-051-00	s	METAL, CHIP 1.2k 5% 1/10W	*9
R432	1-216-049-91	s	METAL, CHIP 1k 5% 1/10W	
R433	1-216-033-00	s	METAL, CHIP 220 5% 1/10W	
R434	1-216-673-11	s	METAL, CHIP 8.2k 0.5% 1/10W	
R435	1-216-667-11	s	METAL, CHIP 4.7k 0.5% 1/10W	
R436	1-216-061-00	s	METAL, CHIP 3.3k 5% 1/10W	
R437	1-216-671-11	s	METAL, CHIP 6.8k 0.5% 1/10W	
R438	1-208-810-11	s	METAL, CHIP 15k 0.5% 1/10W	
R439	1-216-073-00	s	METAL, CHIP 10k 5% 1/10W	
R440	1-216-025-91	s	METAL, CHIP 100 5% 1/10W	
R441	1-216-659-11	s	METAL, CHIP 2.2k 0.5% 1/10W	
R442	1-216-033-00	s	METAL, CHIP 220 5% 1/10W	
R443	1-216-033-00	s	METAL, CHIP 220 5% 1/10W	
R444	1-216-661-11	s	METAL, CHIP 2.7k 0.5% 1/10W	
R445	1-208-789-11	s	METAL, CHIP 2k 0.5% 1/10W	
R446	1-208-806-11	s	METAL, CHIP 10k 0.5% 1/10W	
R447	1-216-037-00	s	METAL, CHIP 330 5% 1/10W	
R448	1-216-057-00	s	METAL, CHIP 2.2k 5% 1/10W	
R449	1-216-097-91	s	METAL, CHIP 100k 5% 1/10W	
R450	1-216-057-00	s	METAL, CHIP 2.2k 5% 1/10W	
R451	1-216-057-00	s	METAL, CHIP 2.2k 5% 1/10W	
R452	1-216-061-00	s	METAL, CHIP 3.3k 5% 1/10W	
R453	1-216-109-00	s	METAL, CHIP 330k 5% 1/10W	
R454	1-216-057-00	s	METAL, CHIP 2.2k 5% 1/10W	
R455	1-216-017-91	s	METAL, CHIP 47 5% 1/10W	
R456	1-216-073-00	s	METAL, CHIP 10k 5% 1/10W	
R457	1-216-049-91	s	METAL, CHIP 1k 5% 1/10W	
R458	1-208-822-11	s	METAL, CHIP 47k 0.5% 1/10W	
R459	1-216-041-00	s	METAL, CHIP 470 5% 1/10W	
R460	1-216-041-00	s	METAL, CHIP 470 5% 1/10W	
R461	1-216-085-00	s	METAL, CHIP 33k 5% 1/10W	
R462	1-216-085-00	s	METAL, CHIP 33k 5% 1/10W	
R463	1-216-085-00	s	METAL, CHIP 33k 5% 1/10W	
R464	1-216-017-91	s	METAL, CHIP 47 5% 1/10W	
R466	1-216-634-11	s	METAL, CHIP 200 0.5% 1/10W	
R468	1-208-800-11	s	METAL, CHIP 5.6k 0.5% 1/10W	
*R470	1-216-687-11	s	METAL, CHIP 33k 0.5% 1/10W	*9
R500-506	1-216-057-00	s	METAL, CHIP 2.2k 5% 1/10W	
R507	1-216-041-00	s	METAL, CHIP 470 5% 1/10W	
R508-512	1-216-057-00	s	METAL, CHIP 2.2k 5% 1/10W	
R513	1-216-097-91	s	METAL, CHIP 100k 5% 1/10W	
R514	1-216-057-00	s	METAL, CHIP 2.2k 5% 1/10W	
R515	1-216-057-00	s	METAL, CHIP 2.2k 5% 1/10W	
R516	1-216-057-00	s	METAL, CHIP 2.2k 5% 1/10W	
R519	1-216-017-91	s	METAL, CHIP 47 5% 1/10W	
R522	1-216-295-91	s	RES, CHIP 0	

Note: In this list * marked parts are design changed.
Refer to pages 18-29 to 18-31 for applicable serial numbers.

(TBC-28P BOARD(for PAL))

Ref. No. or Q'ty	Part No.	SP	Description	
R524	1-216-295-91	s	RES, CHIP 0	
R540	1-216-097-91	s	METAL, CHIP 100k 5% 1/10W	
R541	1-216-089-91	s	METAL, CHIP 47k 5% 1/10W	
R542	1-216-057-00	s	METAL, CHIP 2.2k 5% 1/10W	
R543	1-216-057-00	s	METAL, CHIP 2.2k 5% 1/10W	
R564	1-216-071-00	s	METAL, CHIP 8.2k 5% 1/10W	
*R565	1-216-686-11	s	METAL, CHIP 30k 0.5% 1/10W	*1
	1-216-081-00	s	METAL, CHIP 22k 5% 1/10W	*2
R566	1-208-817-11	s	METAL, CHIP 30k 0.5% 1/10W	
R567	1-208-814-11	s	METAL, CHIP 22k 0.5% 1/10W	
R568	1-216-081-00	s	METAL, CHIP 22k 5% 1/10W	
R569	1-216-085-00	s	METAL, CHIP 33k 5% 1/10W	
R570	1-216-667-11	s	METAL, CHIP 4.7k 0.5% 1/10W	
R571	1-208-822-11	s	METAL, CHIP 47k 0.5% 1/10W	
R572	1-216-665-11	s	METAL, CHIP 3.9k 0.5% 1/10W	
R573	1-216-089-91	s	METAL, CHIP 47k 5% 1/10W	
R574	1-216-665-11	s	METAL, CHIP 3.9k 0.5% 1/10W	
R575	1-216-639-11	s	METAL, CHIP 330 0.5% 1/10W	
R576	1-216-639-11	s	METAL, CHIP 330 0.5% 1/10W	
R577	1-216-639-11	s	METAL, CHIP 330 0.5% 1/10W	
R580	1-216-639-11	s	METAL, CHIP 330 0.5% 1/10W	
R581	1-216-639-11	s	METAL, CHIP 330 0.5% 1/10W	
R582	1-216-639-11	s	METAL, CHIP 330 0.5% 1/10W	
R584	1-216-045-00	s	METAL, CHIP 680 5% 1/10W	
R585	1-216-619-11	s	METAL, CHIP 47 0.5% 1/10W	
R586	1-216-619-11	s	METAL, CHIP 47 0.5% 1/10W	
R587	1-216-041-00	s	METAL, CHIP 470 5% 1/10W	
R588	1-216-619-11	s	METAL, CHIP 47 0.5% 1/10W	
R589	1-216-041-00	s	METAL, CHIP 470 5% 1/10W	
R591	1-216-017-91	s	METAL, CHIP 47 5% 1/10W	
R592	1-216-017-91	s	METAL, CHIP 47 5% 1/10W	
R597	1-216-295-91	s	RES, CHIP 0	
R700	1-216-097-91	s	METAL, CHIP 100k 5% 1/10W	
R701	1-216-097-91	s	METAL, CHIP 100k 5% 1/10W	
R702	1-216-097-91	s	METAL, CHIP 100k 5% 1/10W	
R703	1-216-089-91	s	METAL, CHIP 47k 5% 1/10W	
R704	1-216-089-91	s	METAL, CHIP 47k 5% 1/10W	
R707	1-216-049-91	s	METAL, CHIP 1k 5% 1/10W	
R708	1-216-093-00	s	METAL, CHIP 68k 5% 1/10W	
R709	1-216-049-91	s	METAL, CHIP 1k 5% 1/10W	
R710	1-216-093-00	s	METAL, CHIP 68k 5% 1/10W	
R711	1-216-097-91	s	METAL, CHIP 100k 5% 1/10W	
R712	1-216-085-00	s	METAL, CHIP 33k 5% 1/10W	
R713	1-216-051-00	s	METAL, CHIP 1.2k 5% 1/10W	
R714	1-216-081-00	s	METAL, CHIP 22k 5% 1/10W	
R715	1-216-059-00	s	METAL, CHIP 2.7k 5% 1/10W	
R716	1-216-649-11	s	METAL, CHIP 820 0.5% 1/10W	
*R717	1-216-073-00	s	METAL, CHIP 10k 5% 1/10W	*9
R718	1-216-059-00	s	METAL, CHIP 2.7k 5% 1/10W	
R719	1-216-017-91	s	METAL, CHIP 47 5% 1/10W	
R720	1-216-049-91	s	METAL, CHIP 1k 5% 1/10W	
R721	1-216-659-11	s	METAL, CHIP 2.2k 0.5% 1/10W	
R722	1-216-071-00	s	METAL, CHIP 8.2k 5% 1/10W	
R723	1-216-037-00	s	METAL, CHIP 330 5% 1/10W	
R724	1-216-061-00	s	METAL, CHIP 3.3k 5% 1/10W	
R725	1-216-057-00	s	METAL, CHIP 2.2k 5% 1/10W	
R726	1-216-659-11	s	METAL, CHIP 2.2k 0.5% 1/10W	
R727	1-216-049-91	s	METAL, CHIP 1k 5% 1/10W	

(TBC-28P BOARD(for PAL))

Ref. No. or Q'ty	Part No.	SP	Description	
R728	1-216-045-00	s	METAL, CHIP 680 5% 1/10W	
R729	1-208-771-11	s	METAL, CHIP 360 0.5% 1/10W	
R730	1-216-049-91	s	METAL, CHIP 1k 5% 1/10W	
R731	1-216-065-00	s	METAL, CHIP 4.7k 5% 1/10W	
R732	1-216-065-00	s	METAL, CHIP 4.7k 5% 1/10W	
R733	1-208-806-11	s	METAL, CHIP 10k 0.5% 1/10W	
R734	1-216-651-11	s	METAL, CHIP 1k 0.5% 1/10W	
R735	1-216-059-00	s	METAL, CHIP 2.7k 5% 1/10W	
R736	1-216-649-11	s	METAL, CHIP 820 0.5% 1/10W	
R737	1-216-059-00	s	METAL, CHIP 2.7k 5% 1/10W	
R738	1-216-057-00	s	METAL, CHIP 2.2k 5% 1/10W	
R739	1-208-789-11	s	METAL, CHIP 2k 0.5% 1/10W	
R740	1-216-648-11	s	METAL, CHIP 750 0.5% 1/10W	
R741	1-208-817-11	s	METAL, CHIP 30k 0.5% 1/10W	
R742	1-208-814-11	s	METAL, CHIP 22k 0.5% 1/10W	
R743	1-208-814-11	s	METAL, CHIP 22k 0.5% 1/10W	
R744	1-216-081-00	s	METAL, CHIP 22k 5% 1/10W	
*R745	1-216-049-00	s	METAL, CHIP 1k 5% 1/10W	*8
	1-216-045-00	s	METAL, CHIP 680 5% 1/10W	*9
R746	1-216-081-00	s	METAL, CHIP 22k 5% 1/10W	
R747	1-216-041-00	s	METAL, CHIP 470 5% 1/10W	
R748	1-216-687-11	s	METAL, CHIP 33k 0.5% 1/10W	
*R751	1-216-033-00	s	METAL, CHIP 220 5% 1/10W	*9
*R752	1-208-814-11	s	METAL, CHIP 22k 0.5% 1/10W	*9
*R753	1-208-814-11	s	METAL, CHIP 22k 0.5% 1/10W	*9
*R754	1-216-057-00	s	METAL, CHIP 2.2k 5% 1/10W	*9
*R755	1-216-057-00	s	METAL, CHIP 2.2k 5% 1/10W	*9
R756	1-216-017-91	s	METAL, CHIP 47 5% 1/10W	
R757	1-216-097-91	s	METAL, CHIP 100k 5% 1/10W	
R758	1-216-057-00	s	METAL, CHIP 2.2k 5% 1/10W	
R759	1-216-069-00	s	METAL, CHIP 6.8k 5% 1/10W	
R760	1-216-655-11	s	METAL, CHIP 1.5k 0.5% 1/10W	
R761	1-216-085-00	s	METAL, CHIP 33k 5% 1/10W	
R762	1-216-017-91	s	METAL, CHIP 47 5% 1/10W	
R763	1-216-097-91	s	METAL, CHIP 100k 5% 1/10W	
R764	1-208-789-11	s	METAL, CHIP 2k 0.5% 1/10W	
R765	1-216-051-00	s	METAL, CHIP 1.2k 5% 1/10W	
R766	1-216-648-11	s	METAL, CHIP 750 0.5% 1/10W	
R767	1-216-037-00	s	METAL, CHIP 330 5% 1/10W	
R768	1-216-069-00	s	METAL, CHIP 6.8k 5% 1/10W	
R769	1-208-817-11	s	METAL, CHIP 30k 0.5% 1/10W	
R770	1-216-045-00	s	METAL, CHIP 680 5% 1/10W	
R771	1-216-651-11	s	METAL, CHIP 1k 0.5% 1/10W	
R772	1-216-667-11	s	METAL, CHIP 4.7k 0.5% 1/10W	
R773	1-216-667-11	s	METAL, CHIP 4.7k 0.5% 1/10W	
R774	1-216-635-11	s	METAL, CHIP 220 0.5% 1/10W	
R775	1-216-651-11	s	METAL, CHIP 1k 0.5% 1/10W	
R776	1-216-049-91	s	METAL, CHIP 1k 5% 1/10W	
R777	1-216-081-00	s	METAL, CHIP 22k 5% 1/10W	
R778	1-216-081-00	s	METAL, CHIP 22k 5% 1/10W	
R779	1-216-081-00	s	METAL, CHIP 22k 5% 1/10W	
R780	1-216-651-11	s	METAL, CHIP 1k 0.5% 1/10W	
R781	1-216-667-11	s	METAL, CHIP 4.7k 0.5% 1/10W	
R782	1-216-667-11	s	METAL, CHIP 4.7k 0.5% 1/10W	
R783	1-216-651-11	s	METAL, CHIP 1k 0.5% 1/10W	
R784	1-216-635-11	s	METAL, CHIP 220 0.5% 1/10W	
R785	1-216-651-11	s	METAL, CHIP 1k 0.5% 1/10W	
R786	1-216-049-91	s	METAL, CHIP 1k 5% 1/10W	
R787	1-216-651-11	s	METAL, CHIP 1k 0.5% 1/10W	

Note: In this list * marked parts are design changed.
Refer to pages 18-29 to 18-31 for applicable serial numbers.

(TBC-28P BOARD(for PAL))

Ref. No. or Q'ty	Part No.	SP	Description	
R788	1-216-667-11	s	METAL, CHIP 4.7k 0.5% 1/10W	
R789	1-216-667-11	s	METAL, CHIP 4.7k 0.5% 1/10W	
R790	1-216-659-11	s	METAL, CHIP 2.2k 0.5% 1/10W	
*R791	1-216-677-11	s	METAL, CHIP 12k 0.5% 1/10W	*9
R793	1-216-295-91	s	RES, CHIP 0	
*R794	1-216-081-00	s	METAL, CHIP 22k 5% 1/10W	*9
R795-801	1-216-057-00	s	METAL, CHIP 2.2k 5% 1/10W	
R802	1-216-041-00	s	METAL, CHIP 470 5% 1/10W	
R803	1-216-057-00	s	METAL, CHIP 2.2k 5% 1/10W	
R804	1-216-057-00	s	METAL, CHIP 2.2k 5% 1/10W	
R805	1-216-041-00	s	METAL, CHIP 470 5% 1/10W	
R806	1-216-041-00	s	METAL, CHIP 470 5% 1/10W	
R807	1-216-041-00	s	METAL, CHIP 470 5% 1/10W	
R808	1-216-057-00	s	METAL, CHIP 2.2k 5% 1/10W	
R809	1-216-081-00	s	METAL, CHIP 22k 5% 1/10W	
R810	1-216-085-00	s	METAL, CHIP 33k 5% 1/10W	
R811	1-216-081-00	s	METAL, CHIP 22k 5% 1/10W	
R812	1-216-049-91	s	METAL, CHIP 1k 5% 1/10W	
R814	1-216-037-00	s	METAL, CHIP 330 5% 1/10W	
R815	1-216-069-00	s	METAL, CHIP 6.8k 5% 1/10W	
R816	1-208-817-11	s	METAL, CHIP 30k 0.5% 1/10W	
R817	1-216-041-00	s	METAL, CHIP 470 5% 1/10W	
R818	1-216-097-91	s	METAL, CHIP 100k 5% 1/10W	
*R819	1-216-673-11	s	METAL, CHIP 8.2k 0.5% 1/10W	*10
	1-208-789-11	s	METAL, CHIP 2k 0.5% 1/10W	*11
*R820	1-216-679-11	s	METAL, CHIP 15k 0.5% 1/10W	*3
	1-216-071-00	s	METAL, CHIP 8.2k 5% 1/10W	*4
*R821	1-216-073-00	s	METAL, CHIP 10k 5% 1/10W	*13
	1-216-069-00	s	METAL, CHIP 6.8k 5% 1/10W	*14
*R822	1-216-049-00	s	METAL, CHIP 1k 5% 1/10W	*3
	1-216-051-00	s	METAL, CHIP 1.2k 5% 1/10W	*4
*R823	1-216-065-00	s	METAL, CHIP 4.7k 5% 1/10W	*13
	1-216-655-11	s	METAL, CHIP 1.5k 0.5% 1/10W	*14
R824	1-216-073-00	s	METAL, CHIP 10k 5% 1/10W	
*R825	1-216-017-91	s	METAL, CHIP 47 5% 1/10W	*2
R826	1-216-049-91	s	METAL, CHIP 1k 5% 1/10W	
R827	1-216-655-11	s	METAL, CHIP 1.5k 0.5% 1/10W	
R828	1-216-073-00	s	METAL, CHIP 10k 5% 1/10W	
R829	1-216-073-00	s	METAL, CHIP 10k 5% 1/10W	
R830	1-216-049-91	s	METAL, CHIP 1k 5% 1/10W	
R831	1-216-655-11	s	METAL, CHIP 1.5k 0.5% 1/10W	
*R833	1-216-049-00	s	METAL, CHIP 1k 5% 1/10W	*8
	1-216-045-00	s	METAL, CHIP 680 5% 1/10W	*9
R836	1-216-295-91	s	RES, CHIP 0	
R838	1-216-057-00	s	METAL, CHIP 2.2k 5% 1/10W	
R839	1-216-073-00	s	METAL, CHIP 10k 5% 1/10W	
R840	1-216-085-00	s	METAL, CHIP 33k 5% 1/10W	
R841	1-216-295-91	s	RES, CHIP 0	
R842	1-216-295-91	s	RES, CHIP 0	
R843	1-216-017-91	s	METAL, CHIP 47 5% 1/10W	
R844	1-216-061-00	s	METAL, CHIP 3.3k 5% 1/10W	
R845	1-216-651-11	s	METAL, CHIP 1k 0.5% 1/10W	
R846	1-216-017-91	s	METAL, CHIP 47 5% 1/10W	
R847	1-216-295-91	s	RES, CHIP 0	
R848	1-216-089-91	s	METAL, CHIP 47k 5% 1/10W	
*R850	1-216-097-00	s	METAL, CHIP 100k 5% 1/10W	*8
R851	1-216-017-91	s	METAL, CHIP 47 5% 1/10W	

(TBC-28P BOARD(for PAL))

Ref. No. or Q'ty	Part No.	SP	Description	
R853	1-216-295-91	s	RES, CHIP 0	
R855	1-216-295-91	s	RES, CHIP 0	
R856	1-208-789-11	s	METAL, CHIP 2k 0.5% 1/10W	
R857	1-216-051-00	s	METAL, CHIP 1.2k 5% 1/10W	
R858	1-216-648-11	s	METAL, CHIP 750 0.5% 1/10W	
R859	1-216-037-00	s	METAL, CHIP 330 5% 1/10W	
R860	1-216-069-00	s	METAL, CHIP 6.8k 5% 1/10W	
R861	1-208-817-11	s	METAL, CHIP 30k 0.5% 1/10W	
R862	1-216-045-00	s	METAL, CHIP 680 5% 1/10W	
R863	1-216-295-91	s	RES, CHIP 0	
*R866	1-216-295-91	s	RES, CHIP 0	*9
*R868	1-216-295-91	s	RES, CHIP 0	*9
R869	1-216-073-00	s	METAL, CHIP 10k 5% 1/10W	
R872	1-216-295-91	s	RES, CHIP 0	
*R875	1-216-674-11	s	METAL, CHIP 9.1k 0.5% 1/10W	*10
	1-216-659-11	s	METAL, CHIP 2.2k 0.5% 1/10W	*11
*R876	1-216-125-00	s	METAL, CHIP 1.5M 5% 1/10W	*10
	1-216-117-00	s	METAL, CHIP 680k 5% 1/10W	*11
R877	1-216-017-91	s	METAL, CHIP 47 5% 1/10W	
RV100	1-241-758-11	s	RES, ADJ METAL 100	
RV200	1-241-758-11	s	RES, ADJ METAL 100	
RV300	1-241-786-11	s	RES, ADJ METAL 22k	
RV301	1-241-763-11	s	RES, ADJ METAL 4.7k	
RV400	1-241-786-11	s	RES, ADJ METAL 22k	
RV401	1-241-763-11	s	RES, ADJ METAL 4.7k	
*RV500	1-241-784-11	s	RES, ADJ METAL 4.7k	*1
	1-241-785-11	s	RES, ADJ METAL 10k	*2
RV501	1-241-784-11	s	RES, ADJ METAL 4.7k	
RV502	1-241-785-11	s	RES, ADJ METAL 10k	
RV700	1-241-783-11	s	RES, ADJ METAL 2.2k	
RV701	1-241-784-11	s	RES, ADJ METAL 4.7k	
*RV703	1-241-785-11	s	RES, ADJ METAL 10k	*10
	1-241-784-11	s	RES, ADJ METAL 4.7k	*11
RV706	1-241-784-11	s	RES, ADJ METAL 4.7k	
RV707	1-241-784-11	s	RES, ADJ METAL 4.7k	
S500	1-692-535-11	s	SWITCH, DIP 4-CKT	
TH400	1-807-972-11	s	THERMISTOR SV-1715 1.25k	
X700	1-579-056-11	s	CRYSTAL 14.1875MHz	
X701	1-579-057-11	s	CRYSTAL 17.734475MHz	
X702	1-579-056-11	s	CRYSTAL 14.1875MHz	

Note: In this list * marked parts are design changed.
Refer to pages 18-29 to 18-31 for applicable serial numbers.

TR-84 BOARD

Ref. No. or Q'ty	Part No.	SP	Description
1pc	1-648-921-11	o	PRINTED CIRCUIT BOARD, TR-84
1pc	3-182-257-02	s	HOLDER, DME
CN945	1-565-876-11	o	CONNECTOR 4P, MALE
IC1	8-745-001-07	s	DME DM-230-1

VP-44 BOARD(for UVW-1400, NTSC)

VP-44 board is used for UVW-1400.

Ref. No. or Q'ty	Part No.	SP	Description	
1pc	A-8275-571-A	o	MOUNTED CIRCUIT BOARD, VP-44	
1pc	3-182-386-02	o	PLATE, SHIELD (L), CARD	
1pc	7-621-759-45	s	SCREW, +PSW2.6x6	
1pc	3-179-084-01	s	LEVER (R), PC BOARD	
1pc	3-179-085-01	s	LEVER (L), PC BOARD	
*C51	1-163-033-91	s	CERAMIC, CHIP 0.022uF 50V	*9
C101	1-163-033-91	s	CERAMIC, CHIP 0.022uF 50V	
C102	1-163-033-91	s	CERAMIC, CHIP 0.022uF 50V	
C103	1-163-275-11	s	CERAMIC, CHIP 0.001uF 5% 50V	
C104	1-163-033-91	s	CERAMIC, CHIP 0.022uF 50V	
C105	1-163-033-91	s	CERAMIC, CHIP 0.022uF 50V	
C106	1-126-933-11	s	ELECT 100uF 20% 16V	
C107	1-163-033-91	s	CERAMIC, CHIP 0.022uF 50V	
C108	1-163-033-91	s	CERAMIC, CHIP 0.022uF 50V	
C109	1-163-108-00	s	CERAMIC, CHIP 43pF 5% 50V	
C110	1-163-249-11	s	CERAMIC, CHIP 82pF 5% 50V	
C111	1-163-108-00	s	CERAMIC, CHIP 43pF 5% 50V	
C112	1-124-903-11	s	ELECT 1uF 20% 50V	
C113	1-124-903-11	s	ELECT 1uF 20% 50V	
C114	1-163-275-11	s	CERAMIC, CHIP 0.001uF 5% 50V	
C115	1-163-033-91	s	CERAMIC, CHIP 0.022uF 50V	
C116	1-163-033-91	s	CERAMIC, CHIP 0.022uF 50V	
C117	1-163-033-91	s	CERAMIC, CHIP 0.022uF 50V	
C118	1-163-245-11	s	CERAMIC, CHIP 56pF 5% 50V	
C119	1-163-235-11	s	CERAMIC, CHIP 22pF 5% 50V	
C120-127	1-163-033-91	s	CERAMIC, CHIP 0.022uF 50V	
C128	1-163-133-00	s	CERAMIC, CHIP 470pF 5% 50V	
C129	1-163-033-91	s	CERAMIC, CHIP 0.022uF 50V	
C130	1-163-033-91	s	CERAMIC, CHIP 0.022uF 50V	
C131	1-126-933-11	s	ELECT 100uF 20% 16V	
C132	1-163-033-91	s	CERAMIC, CHIP 0.022uF 50V	
C133	1-163-113-00	s	CERAMIC, CHIP 68pF 5% 50V	
C134-142	1-163-033-91	s	CERAMIC, CHIP 0.022uF 50V	
C143	1-126-933-11	s	ELECT 100uF 20% 16V	
C144	1-126-933-11	s	ELECT 100uF 20% 16V	
C145	1-126-933-11	s	ELECT 100uF 20% 16V	
C146	1-126-933-11	s	ELECT 100uF 20% 16V	
C147	1-163-231-11	s	CERAMIC, CHIP 15pF 5% 50V	
C148	1-163-241-11	s	CERAMIC, CHIP 39pF 5% 50V	
C149	1-163-033-91	s	CERAMIC, CHIP 0.022uF 50V	
C150	1-126-933-11	s	ELECT 100uF 20% 16V	
C201-205	1-163-033-91	s	CERAMIC, CHIP 0.022uF 50V	
C207-212	1-163-033-91	s	CERAMIC, CHIP 0.022uF 50V	
C213	1-163-222-11	s	CERAMIC, CHIP 5pF 50V	
C214	1-163-222-11	s	CERAMIC, CHIP 5pF 50V	
C215	1-126-925-11	s	ELECT 470uF 20% 10V	
C216	1-163-033-91	s	CERAMIC, CHIP 0.022uF 50V	
C217	1-163-033-91	s	CERAMIC, CHIP 0.022uF 50V	
C218	1-163-033-91	s	CERAMIC, CHIP 0.022uF 50V	
C219	1-163-227-11	s	CERAMIC, CHIP 10pF 5% 50V	
C220	1-164-161-11	s	CERAMIC, CHIP 0.0022uF 10% 100V	
C221	1-163-091-00	s	CERAMIC, CHIP 8pF 50V	
C222	1-163-033-91	s	CERAMIC, CHIP 0.022uF 50V	
C223	1-163-033-91	s	CERAMIC, CHIP 0.022uF 50V	
C224	1-126-925-11	s	ELECT 470uF 20% 10V	
C225	1-126-925-11	s	ELECT 470uF 20% 10V	
C226-230	1-163-033-91	s	CERAMIC, CHIP 0.022uF 50V	

Note: In this list * marked parts are design changed.
Refer to pages 18-29 to 18-31 for applicable serial numbers.

(VP-44 BOARD(for UVW-1400, NTSC))

Ref. No. or Q'ty	Part No.	SP	Description
C231	1-126-925-11	s	ELECT 470uF 20% 10V
C232	1-163-033-91	s	CERAMIC, CHIP 0.022uF 50V
C234	1-107-552-11	s	MICA, CHIP 150pF 1% 50V
C235	1-126-933-11	s	ELECT 100uF 20% 16V
C236	1-163-033-91	s	CERAMIC, CHIP 0.022uF 50V
C237	1-126-963-11	s	ELECT 4.7uF 20% 50V
C238	1-163-235-11	s	CERAMIC, CHIP 22pF 5% 50V
C239	1-163-114-00	s	CERAMIC, CHIP 75pF 5% 50V
C240	1-163-033-91	s	CERAMIC, CHIP 0.022uF 50V
C241	1-163-243-11	s	CERAMIC, CHIP 47pF 5% 50V
C242	1-163-033-91	s	CERAMIC, CHIP 0.022uF 50V
C243	1-163-033-91	s	CERAMIC, CHIP 0.022uF 50V
C244	1-163-033-91	s	CERAMIC, CHIP 0.022uF 50V
C245	1-126-925-11	s	ELECT 470uF 20% 10V
C246	1-126-933-11	s	ELECT 100uF 20% 16V
C247	1-163-033-91	s	CERAMIC, CHIP 0.022uF 50V
C248	1-163-033-91	s	CERAMIC, CHIP 0.022uF 50V
C249	1-126-933-11	s	ELECT 100uF 20% 16V
C250	1-126-933-11	s	ELECT 100uF 20% 16V
C251	1-126-964-11	s	ELECT 10uF 20% 50V
C253	1-163-033-91	s	CERAMIC, CHIP 0.022uF 50V
C301	1-163-033-91	s	CERAMIC, CHIP 0.022uF 50V
C302	1-163-033-91	s	CERAMIC, CHIP 0.022uF 50V
C303	1-163-275-11	s	CERAMIC, CHIP 0.001uF 5% 50V
C304	1-163-033-91	s	CERAMIC, CHIP 0.022uF 50V
C305	1-126-933-11	s	ELECT 100uF 20% 16V
C306	1-163-033-91	s	CERAMIC, CHIP 0.022uF 50V
C307	1-163-033-91	s	CERAMIC, CHIP 0.022uF 50V
C308	1-163-033-91	s	CERAMIC, CHIP 0.022uF 50V
C309	1-163-110-00	s	CERAMIC, CHIP 51pF 5% 50V
C310	1-163-251-11	s	CERAMIC, CHIP 100pF 5% 50V
C311	1-163-110-00	s	CERAMIC, CHIP 51pF 5% 50V
C312	1-124-903-11	s	ELECT 1uF 20% 50V
C313	1-124-903-11	s	ELECT 1uF 20% 50V
C314	1-163-275-11	s	CERAMIC, CHIP 0.001uF 5% 50V
C315	1-163-135-00	s	CERAMIC, CHIP 560pF 5% 50V
C316	1-163-257-11	s	CERAMIC, CHIP 180pF 5% 50V
C317	1-163-033-91	s	CERAMIC, CHIP 0.022uF 50V
C318	1-163-033-91	s	CERAMIC, CHIP 0.022uF 50V
C319	1-163-243-11	s	CERAMIC, CHIP 47pF 5% 50V
C320	1-163-033-91	s	CERAMIC, CHIP 0.022uF 50V
C321	1-163-033-91	s	CERAMIC, CHIP 0.022uF 50V
C322	1-163-235-11	s	CERAMIC, CHIP 22pF 5% 50V
C323	1-163-033-91	s	CERAMIC, CHIP 0.022uF 50V
C324	1-163-033-91	s	CERAMIC, CHIP 0.022uF 50V
C325	1-163-033-91	s	CERAMIC, CHIP 0.022uF 50V
C326	1-163-033-91	s	CERAMIC, CHIP 0.022uF 50V
C327	1-163-133-00	s	CERAMIC, CHIP 470pF 5% 50V
C328	1-163-033-91	s	CERAMIC, CHIP 0.022uF 50V
C329	1-163-033-91	s	CERAMIC, CHIP 0.022uF 50V
C330	1-163-033-91	s	CERAMIC, CHIP 0.022uF 50V
C331	1-163-033-91	s	CERAMIC, CHIP 0.022uF 50V
C332	1-126-933-11	s	ELECT 100uF 20% 16V
C333	1-163-033-91	s	CERAMIC, CHIP 0.022uF 50V
C334	1-163-253-11	s	CERAMIC, CHIP 120pF 5% 50V
C335-339	1-163-033-91	s	CERAMIC, CHIP 0.022uF 50V
C340	1-126-933-11	s	ELECT 100uF 20% 16V
C341	1-163-033-91	s	CERAMIC, CHIP 0.022uF 50V
C342	1-163-033-91	s	CERAMIC, CHIP 0.022uF 50V

(VP-44 BOARD(for UVW-1400, NTSC))

Ref. No. or Q'ty	Part No.	SP	Description	
C343	1-126-933-11	s	ELECT 100uF 20% 16V	
C344	1-163-033-91	s	CERAMIC, CHIP 0.022uF 50V	
C345	1-163-033-91	s	CERAMIC, CHIP 0.022uF 50V	
C346	1-163-231-11	s	CERAMIC, CHIP 15pF 5% 50V	
C347	1-126-933-11	s	ELECT 100uF 20% 16V	
C348	1-126-933-11	s	ELECT 100uF 20% 16V	
C349	1-163-241-11	s	CERAMIC, CHIP 39pF 5% 50V	
C350	1-163-033-91	s	CERAMIC, CHIP 0.022uF 50V	
C351	1-126-933-11	s	ELECT 100uF 20% 16V	
C401-408	1-163-033-91	s	CERAMIC, CHIP 0.022uF 50V	
C409	1-126-925-11	s	ELECT 470uF 20% 10V	
C410	1-163-033-91	s	CERAMIC, CHIP 0.022uF 50V	
C411	1-163-033-91	s	CERAMIC, CHIP 0.022uF 50V	
C412	1-163-222-11	s	CERAMIC, CHIP 5pF 50V	
C413	1-163-222-11	s	CERAMIC, CHIP 5pF 50V	
C414	1-163-033-91	s	CERAMIC, CHIP 0.022uF 50V	
C415	1-164-161-11	s	CERAMIC, CHIP 0.0022uF 10% 100V	
C416	1-163-222-11	s	CERAMIC, CHIP 5pF 50V	
C417	1-163-033-91	s	CERAMIC, CHIP 0.022uF 50V	
C418	1-163-033-91	s	CERAMIC, CHIP 0.022uF 50V	
C419	1-126-925-11	s	ELECT 470uF 20% 10V	
C420	1-126-925-11	s	ELECT 470uF 20% 10V	
C421-425	1-163-033-91	s	CERAMIC, CHIP 0.022uF 50V	
C426	1-126-933-11	s	ELECT 100uF 20% 16V	
C427	1-126-925-11	s	ELECT 470uF 20% 10V	
C428	1-163-033-91	s	CERAMIC, CHIP 0.022uF 50V	
C429	1-163-084-00	s	CERAMIC, CHIP 1.5pF 50V	
C430	1-107-552-11	s	MICA, CHIP 150pF 1% 50V	
C431	1-163-033-91	s	CERAMIC, CHIP 0.022uF 50V	
C432	1-126-963-11	s	ELECT 4.7uF 20% 50V	
C433	1-163-239-11	s	CERAMIC, CHIP 33pF 5% 50V	
C434	1-163-033-91	s	CERAMIC, CHIP 0.022uF 50V	
C435	1-163-033-91	s	CERAMIC, CHIP 0.022uF 50V	
C436	1-163-251-11	s	CERAMIC, CHIP 100pF 5% 50V	
C437	1-126-925-11	s	ELECT 470uF 20% 10V	
C438	1-126-933-11	s	ELECT 100uF 20% 16V	
C439	1-163-033-91	s	CERAMIC, CHIP 0.022uF 50V	
C440	1-163-033-91	s	CERAMIC, CHIP 0.022uF 50V	
C441	1-163-033-91	s	CERAMIC, CHIP 0.022uF 50V	
C442	1-126-933-11	s	ELECT 100uF 20% 16V	
C443	1-126-933-11	s	ELECT 100uF 20% 16V	
*C501	1-163-033-91	s	CERAMIC, CHIP 0.022uF 50V	*8
C502	1-163-033-91	s	CERAMIC, CHIP 0.022uF 50V	
C503	1-126-933-11	s	ELECT 100uF 20% 16V	
C504	1-126-933-11	s	ELECT 100uF 20% 16V	
C505	1-163-033-91	s	CERAMIC, CHIP 0.022uF 50V	
C506	1-163-033-91	s	CERAMIC, CHIP 0.022uF 50V	
C507	1-163-033-91	s	CERAMIC, CHIP 0.022uF 50V	
C508	1-163-033-91	s	CERAMIC, CHIP 0.022uF 50V	
C509	1-163-227-11	s	CERAMIC, CHIP 10pF 5% 50V	
C510	1-163-251-11	s	CERAMIC, CHIP 100pF 5% 50V	
C511	1-163-251-11	s	CERAMIC, CHIP 100pF 5% 50V	
C512	1-131-353-00	s	TANTALUM 10uF 10% 35V	
C513	1-131-353-00	s	TANTALUM 10uF 10% 35V	
C514	1-163-033-91	s	CERAMIC, CHIP 0.022uF 50V	
C515	1-130-491-00	s	MYLAR 0.047uF 5% 50V	
C516	1-163-033-91	s	CERAMIC, CHIP 0.022uF 50V	
C517	1-163-033-91	s	CERAMIC, CHIP 0.022uF 50V	
C518	1-163-227-11	s	CERAMIC, CHIP 10pF 5% 50V	

Note: In this list * marked parts are design changed.
Refer to pages 18-29 to 18-31 for applicable serial numbers.

(VP-44 BOARD(for UVW-1400, NTSC))

Ref. No. or Q'ty	Part No.	SP	Description	
C519	1-163-235-11	s	CERAMIC, CHIP 22pF 5% 50V	
C520-526	1-163-033-91	s	CERAMIC, CHIP 0.022uF 50V	
C527	1-126-933-11	s	ELECT 100uF 20% 16V	
C528	1-163-033-91	s	CERAMIC, CHIP 0.022uF 50V	
C529	1-163-033-91	s	CERAMIC, CHIP 0.022uF 50V	
C530	1-163-033-91	s	CERAMIC, CHIP 0.022uF 50V	
C531	1-163-224-11	s	CERAMIC, CHIP 7pF 50V	
C532	1-131-353-00	s	TANTALUM 10uF 10% 35V	
C533	1-131-353-00	s	TANTALUM 10uF 10% 35V	
C534	1-126-933-11	s	ELECT 100uF 20% 16V	
C535	1-163-033-91	s	CERAMIC, CHIP 0.022uF 50V	
C536	1-163-033-91	s	CERAMIC, CHIP 0.022uF 50V	
C537	1-130-491-00	s	MYLAR 0.047uF 5% 50V	
C538	1-163-033-91	s	CERAMIC, CHIP 0.022uF 50V	
C539	1-163-227-11	s	CERAMIC, CHIP 10pF 5% 50V	
C540	1-163-033-91	s	CERAMIC, CHIP 0.022uF 50V	
C541	1-163-243-11	s	CERAMIC, CHIP 47pF 5% 50V	
C542	1-163-033-91	s	CERAMIC, CHIP 0.022uF 50V	
C543	1-163-033-91	s	CERAMIC, CHIP 0.022uF 50V	
C544	1-163-033-91	s	CERAMIC, CHIP 0.022uF 50V	
C545	1-163-033-91	s	CERAMIC, CHIP 0.022uF 50V	
C546	1-163-227-11	s	CERAMIC, CHIP 10pF 5% 50V	
C547	1-163-243-11	s	CERAMIC, CHIP 47pF 5% 50V	
C548	1-163-033-91	s	CERAMIC, CHIP 0.022uF 50V	
C549	1-163-033-91	s	CERAMIC, CHIP 0.022uF 50V	
C550	1-163-033-91	s	CERAMIC, CHIP 0.022uF 50V	
C551	1-163-222-11	s	CERAMIC, CHIP 5pF 50V	
C552-556	1-163-033-91	s	CERAMIC, CHIP 0.022uF 50V	
C557	1-126-925-11	s	ELECT 470uF 20% 10V	
C558	1-126-925-11	s	ELECT 470uF 20% 10V	
C559	1-163-033-91	s	CERAMIC, CHIP 0.022uF 50V	
C560	1-163-033-91	s	CERAMIC, CHIP 0.022uF 50V	
C561	1-126-933-11	s	ELECT 100uF 20% 16V	
C562	1-126-933-11	s	ELECT 100uF 20% 16V	
*C563	1-126-933-11	s	ELECT 100uF 20% 16V	*9
C601	1-126-933-11	s	ELECT 100uF 20% 16V	
C602	1-126-933-11	s	ELECT 100uF 20% 16V	
C603-608	1-163-033-91	s	CERAMIC, CHIP 0.022uF 50V	
C609	1-126-933-11	s	ELECT 100uF 20% 16V	
C610	1-126-933-11	s	ELECT 100uF 20% 16V	
C613	1-163-033-91	s	CERAMIC, CHIP 0.022uF 50V	
C614	1-163-033-91	s	CERAMIC, CHIP 0.022uF 50V	
C615	1-126-933-11	s	ELECT 100uF 20% 16V	
C616	1-126-933-11	s	ELECT 100uF 20% 16V	
C617	1-163-033-91	s	CERAMIC, CHIP 0.022uF 50V	
C618	1-163-033-91	s	CERAMIC, CHIP 0.022uF 50V	
C619	1-131-347-00	s	TANTALUM 1uF 10% 35V	
C620	1-131-347-00	s	TANTALUM 1uF 10% 35V	
C621	1-131-347-00	s	TANTALUM 1uF 10% 35V	
C622	1-131-347-00	s	TANTALUM 1uF 10% 35V	
C623	1-163-033-91	s	CERAMIC, CHIP 0.022uF 50V	
C624	1-163-033-91	s	CERAMIC, CHIP 0.022uF 50V	
C625	1-163-033-91	s	CERAMIC, CHIP 0.022uF 50V	
C626	1-130-491-00	s	MYLAR 0.047uF 5% 50V	
C627	1-130-491-00	s	MYLAR 0.047uF 5% 50V	
C628	1-163-033-91	s	CERAMIC, CHIP 0.022uF 50V	
C629	1-163-227-11	s	CERAMIC, CHIP 10pF 5% 50V	
C630	1-163-033-91	s	CERAMIC, CHIP 0.022uF 50V	
C632-639	1-163-033-91	s	CERAMIC, CHIP 0.022uF 50V	

(VP-44 BOARD(for UVW-1400, NTSC))

Ref. No. or Q'ty	Part No.	SP	Description	
C640	1-126-933-11	s	ELECT 100uF 20% 16V	
C641	1-163-033-91	s	CERAMIC, CHIP 0.022uF 50V	
C643	1-163-243-11	s	CERAMIC, CHIP 47pF 5% 50V	
C644	1-163-227-11	s	CERAMIC, CHIP 10pF 5% 50V	
C645	1-163-033-91	s	CERAMIC, CHIP 0.022uF 50V	
C646	1-163-033-91	s	CERAMIC, CHIP 0.022uF 50V	
C647	1-163-224-11	s	CERAMIC, CHIP 7pF 50V	
C649	1-163-033-91	s	CERAMIC, CHIP 0.022uF 50V	
C650	1-163-033-91	s	CERAMIC, CHIP 0.022uF 50V	
C651	1-163-033-91	s	CERAMIC, CHIP 0.022uF 50V	
C652	1-163-033-91	s	CERAMIC, CHIP 0.022uF 50V	
C653	1-126-933-11	s	ELECT 100uF 20% 16V	
C654	1-163-227-11	s	CERAMIC, CHIP 10pF 5% 50V	
C701	1-126-933-11	s	ELECT 100uF 20% 16V	
C702	1-126-933-11	s	ELECT 100uF 20% 16V	
C703	1-163-033-91	s	CERAMIC, CHIP 0.022uF 50V	
C704	1-163-033-91	s	CERAMIC, CHIP 0.022uF 50V	
C705	1-163-231-11	s	CERAMIC, CHIP 15pF 5% 50V	
C706	1-163-231-11	s	CERAMIC, CHIP 15pF 5% 50V	
C707	1-163-243-11	s	CERAMIC, CHIP 47pF 5% 50V	
C708	1-163-243-11	s	CERAMIC, CHIP 47pF 5% 50V	
C709	1-163-227-11	s	CERAMIC, CHIP 10pF 5% 50V	
C710	1-163-227-11	s	CERAMIC, CHIP 10pF 5% 50V	
C711	1-163-235-11	s	CERAMIC, CHIP 22pF 5% 50V	
C712	1-163-235-11	s	CERAMIC, CHIP 22pF 5% 50V	
C713-725	1-163-033-91	s	CERAMIC, CHIP 0.022uF 50V	
C726-730	1-126-933-11	s	ELECT 100uF 20% 16V	
C731	1-131-353-00	s	TANTALUM 10uF 10% 35V	
C732	1-163-033-91	s	CERAMIC, CHIP 0.022uF 50V	
C733	1-163-033-91	s	CERAMIC, CHIP 0.022uF 50V	
C734	1-163-033-91	s	CERAMIC, CHIP 0.022uF 50V	
C735	1-163-033-91	s	CERAMIC, CHIP 0.022uF 50V	
C736	1-130-487-00	s	MYLAR 0.022uF 5% 50V	
C737	1-163-033-91	s	CERAMIC, CHIP 0.022uF 50V	
C738	1-163-033-91	s	CERAMIC, CHIP 0.022uF 50V	
C739	1-163-033-91	s	CERAMIC, CHIP 0.022uF 50V	
C740	1-126-933-11	s	ELECT 100uF 20% 16V	
C741	1-126-933-11	s	ELECT 100uF 20% 16V	
CN103	1-573-782-21	o	CONNECTOR, PHEC 60P, MALE	
*CN104	1-573-782-21	o	CONNECTOR, PHEC 60P, MALE	*9
CN105	1-506-491-11	s	CONNECTOR 12P, MALE	
*CN601	1-573-782-21	o	CONNECTOR, PHEC 60P, MALE	*8
D201	8-719-123-82	s	DIODE 1SS303-T1	
D401	8-719-123-82	s	DIODE 1SS303-T1	
D501	8-719-123-82	s	DIODE 1SS303-T1	
D502	8-719-941-04	s	DIODE SB007-03CP	
D503	8-719-021-31	s	DIODE UZM5.1B	
D504	8-719-123-82	s	DIODE 1SS303-T1	
D601	8-719-941-04	s	DIODE SB007-03CP	
D701	8-719-123-82	s	DIODE 1SS303-T1	
DL101	1-415-154-00	s	DELAY LINE 35nS	
DL301	1-415-546-11	s	DELAY LINE 50nS	
FL201	1-239-770-11	s	FILTER, LOW-PASS 4MHz	
FL401	1-239-772-11	s	FILTER, LOW-PASS 3MHz	
FL601	1-239-771-11	s	FILTER, LOW-PASS 6 MHz	
IC101	8-752-052-75	s	IC CXA1479Q	
IC102	8-759-300-71	s	IC HD14053BFP	

Note: In this list * marked parts are design changed.
Refer to pages 18-29 to 18-31 for applicable serial numbers.

(VP-44 BOARD(for UVW-1400, NTSC))

Ref. No. or Q'ty	Part No.	SP	Description	
IC103	8-759-908-92	s	IC TL084CNS	
IC104	8-759-702-08	s	IC NJM360M	
IC202	8-752-052-48	s	IC CXA1370Q	
IC203	8-759-700-65	s	IC NJM79L05A	
IC204	1-810-333-11	s	HIC BP-022	
IC205	8-759-189-43	s	IC AN77L05-TA	
IC301	8-752-052-75	s	IC CXA1479Q	
IC302	8-759-300-71	s	IC HD14053BFP	
IC303	8-759-908-92	s	IC TL084CNS	
IC401	8-752-052-48	s	IC CXA1370Q	
IC402	8-759-700-65	s	IC NJM79L05A	
IC403	1-810-333-11	s	HIC BP-022	
IC404	8-759-189-43	s	IC AN77L05-TA	
IC501	8-759-907-81	s	IC SN74LS221NS	
IC502	8-759-908-92	s	IC TL084CNS	
IC504	8-759-168-20	s	IC TA78L09S	
IC505	8-759-700-65	s	IC NJM79L05A	
IC506	8-759-908-92	s	IC TL084CNS	
IC507	8-752-052-73	s	IC CXA1451M	
IC508	8-752-052-73	s	IC CXA1451M	
IC509	8-752-052-73	s	IC CXA1451M	
IC510	8-752-052-73	s	IC CXA1451M	
IC511	8-759-927-46	s	IC SN74HC00ANS	
IC512	8-759-182-84	s	IC PQ05SZ5U	
IC513	8-759-822-95	s	IC L79M05T-FA	
IC514	8-759-300-71	s	IC HD14053BFP	
*IC515	8-759-189-43	s	IC AN77L05-TA	*8
	8-759-300-71	s	IC HD14053BFP	*9
IC516	8-759-700-65	s	IC NJM79L05A	
IC601	8-759-981-48	s	IC NJM082M	
IC602	8-759-908-92	s	IC TL084CNS	
IC603	8-759-300-71	s	IC HD14053BFP	
IC604	8-759-908-92	s	IC TL084CNS	
IC605	8-752-054-80	s	IC CXA1521M	
IC606	8-752-054-80	s	IC CXA1521M	
IC607	8-759-168-20	s	IC TA78L09S	
IC608	8-759-906-59	s	IC CX22017	
IC610	8-759-700-65	s	IC NJM79L05A	
IC612	8-752-052-73	s	IC CXA1451M	
IC613	8-759-262-00	s	IC MC14576CF	
IC701	8-752-052-73	s	IC CXA1451M	
IC702	8-752-052-73	s	IC CXA1451M	
IC703	8-759-927-46	s	IC SN74HC00ANS	
IC704	8-759-925-74	s	IC TC74HC04ANS	
IC705	8-759-925-85	s	IC SN74HC32ANS	
IC706	8-759-189-43	s	IC AN77L05-TA	
IC707	8-759-700-65	s	IC NJM79L05A	
IC708	8-759-168-20	s	IC TA78L09S	
L101	1-410-482-31	s	INDUCTOR 100uH	
L102	1-408-406-00	s	INDUCTOR 5.6uH	
L103	1-408-406-00	s	INDUCTOR 5.6uH	
L104	1-410-466-41	s	INDUCTOR 4.7uH	
L105	1-410-482-31	s	INDUCTOR 100uH	
L106	1-410-462-11	s	INDUCTOR 2.2uH	
L107	1-410-482-31	s	INDUCTOR 100uH	
L108	1-410-482-31	s	INDUCTOR 100uH	
L109	1-408-621-31	s	INDUCTOR 330uH	
L110	1-410-482-31	s	INDUCTOR 100uH	

(VP-44 BOARD(for UVW-1400, NTSC))

Ref. No. or Q'ty	Part No.	SP	Description	
L201	1-410-471-11	s	INDUCTOR 12uH	
L202	1-410-482-31	s	INDUCTOR 100uH	
L203	1-410-468-11	s	INDUCTOR 6.8uH	
L204	1-410-478-11	s	INDUCTOR 47uH	
L205	1-410-482-31	s	INDUCTOR 100uH	
L206	1-410-482-31	s	INDUCTOR 100uH	
L207	1-410-482-31	s	INDUCTOR 100uH	
L301	1-410-482-31	s	INDUCTOR 100uH	
L302	1-410-468-11	s	INDUCTOR 6.8uH	
L303	1-410-468-11	s	INDUCTOR 6.8uH	
L304	1-408-429-00	s	INDUCTOR 470uH	
L305	1-408-429-00	s	INDUCTOR 470uH	
L306	1-408-406-00	s	INDUCTOR 5.6uH	
L307	1-410-482-31	s	INDUCTOR 100uH	
L308	1-410-462-11	s	INDUCTOR 2.2uH	
L309	1-408-621-31	s	INDUCTOR 330uH	
L310	1-410-482-31	s	INDUCTOR 100uH	
L311	1-410-482-31	s	INDUCTOR 100uH	
L312	1-410-482-31	s	INDUCTOR 100uH	
L401	1-410-471-11	s	INDUCTOR 12uH	
L402	1-410-482-31	s	INDUCTOR 100uH	
L403	1-408-408-00	s	INDUCTOR 8.2uH	
L404	1-410-482-31	s	INDUCTOR 100uH	
L405	1-410-482-31	s	INDUCTOR 100uH	
L406	1-410-482-31	s	INDUCTOR 100uH	
L501	1-410-482-31	s	INDUCTOR 100uH	
L503	1-410-482-31	s	INDUCTOR 100uH	
L504	1-410-482-31	s	INDUCTOR 100uH	
L505	1-410-478-11	s	INDUCTOR 47uH	
L506	1-410-476-11	s	INDUCTOR 33uH	
*L507	1-410-482-31	s	INDUCTOR 100uH	*9
L601-606	1-410-482-31	s	INDUCTOR 100uH	
L607	1-408-413-00	s	INDUCTOR 22uH	
L702	1-410-482-31	s	INDUCTOR 100uH	
L703	1-410-476-11	s	INDUCTOR 33uH	
L704	1-410-476-11	s	INDUCTOR 33uH	
L706-710	1-412-533-21	s	INDUCTOR 47uH	
*Q51	8-729-904-41	s	TRANSISTOR FMY3	*44
Q101	8-729-117-32	s	TRANSISTOR 2SC4177	
Q102	8-729-117-72	s	TRANSISTOR 2SC4178	
Q103	8-729-143-07	s	TRANSISTOR 2SA1610-YY33	
Q104	8-729-117-72	s	TRANSISTOR 2SC4178	
Q105	8-729-117-72	s	TRANSISTOR 2SC4178	
Q106	8-729-143-07	s	TRANSISTOR 2SA1610-YY33	
Q107-111	8-729-117-72	s	TRANSISTOR 2SC4178	
Q112	8-729-905-18	s	TRANSISTOR DTC144EU	
Q201	8-729-117-72	s	TRANSISTOR 2SC4178	
Q202	8-729-143-07	s	TRANSISTOR 2SA1610-YY33	
Q203	8-729-117-72	s	TRANSISTOR 2SC4178	
Q204	8-729-117-72	s	TRANSISTOR 2SC4178	
Q205	8-729-143-07	s	TRANSISTOR 2SA1610-YY33	
Q206	8-729-143-07	s	TRANSISTOR 2SA1610-YY33	
Q207	8-729-117-72	s	TRANSISTOR 2SC4178	
Q208	8-729-143-07	s	TRANSISTOR 2SA1610-YY33	
Q209	8-729-143-07	s	TRANSISTOR 2SA1610-YY33	
Q210	8-729-117-72	s	TRANSISTOR 2SC4178	
Q211	8-729-117-72	s	TRANSISTOR 2SC4178	
Q212	8-729-117-72	s	TRANSISTOR 2SC4178	

Note: In this list * marked parts are design changed.
Refer to pages 18-29 to 18-31 for applicable serial numbers.

(VP-44 BOARD(for UVW-1400, NTSC))

Ref. No. or Q'ty	Part No.	SP	Description
Q213	8-729-143-07	s	TRANSISTOR 2SA1610-YY33
Q214	8-729-143-07	s	TRANSISTOR 2SA1610-YY33
Q215	8-729-117-72	s	TRANSISTOR 2SC4178
Q216	8-729-905-12	s	TRANSISTOR DTA144EU
Q217	8-729-117-72	s	TRANSISTOR 2SC4178
Q218	8-729-143-07	s	TRANSISTOR 2SA1610-YY33
Q219	8-729-117-72	s	TRANSISTOR 2SC4178
Q220	8-729-143-07	s	TRANSISTOR 2SA1610-YY33
Q301	8-729-117-32	s	TRANSISTOR 2SC4177
Q302	8-729-117-72	s	TRANSISTOR 2SC4178
Q303	8-729-117-72	s	TRANSISTOR 2SC4178
Q304	8-729-143-07	s	TRANSISTOR 2SA1610-YY33
Q305	8-729-117-72	s	TRANSISTOR 2SC4178
Q306	8-729-143-07	s	TRANSISTOR 2SA1610-YY33
Q307-311	8-729-117-72	s	TRANSISTOR 2SC4178
Q401	8-729-117-72	s	TRANSISTOR 2SC4178
Q402	8-729-143-07	s	TRANSISTOR 2SA1610-YY33
Q403	8-729-117-72	s	TRANSISTOR 2SC4178
Q404	8-729-117-72	s	TRANSISTOR 2SC4178
Q405	8-729-143-07	s	TRANSISTOR 2SA1610-YY33
Q406	8-729-143-07	s	TRANSISTOR 2SA1610-YY33
Q407	8-729-117-72	s	TRANSISTOR 2SC4178
Q408	8-729-117-72	s	TRANSISTOR 2SC4178
Q409	8-729-117-72	s	TRANSISTOR 2SC4178
Q410	8-729-117-72	s	TRANSISTOR 2SC4178
Q411	8-729-143-07	s	TRANSISTOR 2SA1610-YY33
Q412	8-729-143-07	s	TRANSISTOR 2SA1610-YY33
Q413	8-729-117-72	s	TRANSISTOR 2SC4178
Q414	8-729-143-07	s	TRANSISTOR 2SA1610-YY33
Q415	8-729-143-07	s	TRANSISTOR 2SA1610-YY33
Q416	8-729-905-12	s	TRANSISTOR DTA144EU
Q417	8-729-117-72	s	TRANSISTOR 2SC4178
Q418	8-729-143-07	s	TRANSISTOR 2SA1610-YY33
Q501	8-729-117-32	s	TRANSISTOR 2SC4177
Q502	8-729-923-06	s	TRANSISTOR FMW8
Q503	8-729-904-04	s	TRANSISTOR FMS2
Q504	8-729-903-82	s	TRANSISTOR FMW2
Q505	8-729-931-46	s	TRANSISTOR FMW7
Q506	8-729-907-26	s	TRANSISTOR IMX1
Q507	8-729-904-41	s	TRANSISTOR FMY3
Q508	8-729-117-32	s	TRANSISTOR 2SC4177
Q509	8-729-117-32	s	TRANSISTOR 2SC4177
Q510	8-729-117-32	s	TRANSISTOR 2SC4177
Q511	8-729-907-26	s	TRANSISTOR IMX1
Q512	8-729-117-32	s	TRANSISTOR 2SC4177
Q513	8-729-117-32	s	TRANSISTOR 2SC4177
Q514	8-729-117-32	s	TRANSISTOR 2SC4177
Q515	8-729-907-26	s	TRANSISTOR IMX1
Q516	8-729-117-32	s	TRANSISTOR 2SC4177
Q517	8-729-117-32	s	TRANSISTOR 2SC4177
Q518	8-729-140-63	s	TRANSISTOR 2SA1611-M5M6
Q519	8-729-143-14	s	TRANSISTOR 2SC4176-B35
Q520	8-729-117-32	s	TRANSISTOR 2SC4177
Q521	8-729-904-41	s	TRANSISTOR FMY3
Q522	8-729-904-41	s	TRANSISTOR FMY3
Q523	8-729-904-41	s	TRANSISTOR FMY3
Q601	8-729-117-32	s	TRANSISTOR 2SC4177
Q602	8-729-117-32	s	TRANSISTOR 2SC4177
Q603	8-729-923-06	s	TRANSISTOR FMW8

(VP-44 BOARD(for UVW-1400, NTSC))

Ref. No. or Q'ty	Part No.	SP	Description	
Q604	8-729-923-06	s	TRANSISTOR FMW8	
Q605	8-729-904-04	s	TRANSISTOR FMS2	
Q606	8-729-904-04	s	TRANSISTOR FMS2	
Q607	8-729-903-82	s	TRANSISTOR FMW2	
Q608	8-729-903-82	s	TRANSISTOR FMW2	
Q609	8-729-907-26	s	TRANSISTOR IMX1	
Q610	8-729-907-26	s	TRANSISTOR IMX1	
Q611	8-729-931-46	s	TRANSISTOR FMW7	
Q612	8-729-931-46	s	TRANSISTOR FMW7	
Q613	8-729-140-63	s	TRANSISTOR 2SA1611-M5M6	
Q615-622	8-729-117-32	s	TRANSISTOR 2SC4177	
Q623	8-729-143-14	s	TRANSISTOR 2SC4176-B35	
Q624	8-729-117-32	s	TRANSISTOR 2SC4177	
Q701	8-729-117-32	s	TRANSISTOR 2SC4177	
Q702	8-729-117-32	s	TRANSISTOR 2SC4177	
Q703	8-729-140-63	s	TRANSISTOR 2SA1611-M5M6	
Q704	8-729-140-63	s	TRANSISTOR 2SA1611-M5M6	
Q705	8-729-117-32	s	TRANSISTOR 2SC4177	
Q706	8-729-117-32	s	TRANSISTOR 2SC4177	
Q707	8-729-117-32	s	TRANSISTOR 2SC4177	
Q708	8-729-117-32	s	TRANSISTOR 2SC4177	
Q709	8-729-422-44	s	TRANSISTOR 2SK663	
Q710	8-729-422-44	s	TRANSISTOR 2SK663	
Q711	8-729-422-44	s	TRANSISTOR 2SK663	
Q712	8-729-422-44	s	TRANSISTOR 2SK663	
Q713	8-729-140-63	s	TRANSISTOR 2SA1611-M5M6	
Q714	8-729-140-63	s	TRANSISTOR 2SA1611-M5M6	
Q715	8-729-140-63	s	TRANSISTOR 2SA1611-M5M6	
Q716	8-729-140-63	s	TRANSISTOR 2SA1611-M5M6	
Q717	8-729-117-32	s	TRANSISTOR 2SC4177	
Q718	8-729-907-26	s	TRANSISTOR IMX1	
Q719	8-729-907-26	s	TRANSISTOR IMX1	
Q720	8-729-117-32	s	TRANSISTOR 2SC4177	
Q721	8-729-117-32	s	TRANSISTOR 2SC4177	
Q722	8-729-907-26	s	TRANSISTOR IMX1	
Q723	8-729-907-26	s	TRANSISTOR IMX1	
Q724	8-729-117-32	s	TRANSISTOR 2SC4177	
Q725	8-729-117-32	s	TRANSISTOR 2SC4177	
Q726	8-729-140-63	s	TRANSISTOR 2SA1611-M5M6	
Q727	8-729-140-63	s	TRANSISTOR 2SA1611-M5M6	
*R51	1-216-097-91	s	METAL, CHIP 100k 5% 1/10W	*9
*R52	1-216-073-00	s	METAL, CHIP 10k 5% 1/10W	*9
*R53	1-216-057-00	s	METAL, CHIP 2.2k 5% 1/10W	*44
*R54	1-216-025-91	s	METAL, CHIP 100 5% 1/10W	*44
*R55	1-216-057-00	s	METAL, CHIP 2.2k 5% 1/10W	*44
*R56	1-216-041-00	s	METAL, CHIP 470 5% 1/10W	*44
*R57	1-216-041-00	s	METAL, CHIP 470 5% 1/10W	*9
*R58	1-216-049-91	s	METAL, CHIP 1k 5% 1/10W	*9
R101	1-216-295-91	s	RES, CHIP 0	
R102	1-216-295-91	s	RES, CHIP 0	
R103	1-216-638-11	s	METAL, CHIP 300 0.5% 1/10W	
R104	1-216-638-11	s	METAL, CHIP 300 0.5% 1/10W	
R105	1-216-025-91	s	METAL, CHIP 100 5% 1/10W	
R106	1-216-057-00	s	METAL, CHIP 2.2k 5% 1/10W	
R107	1-216-295-91	s	RES, CHIP 0	
R108	1-216-025-91	s	METAL, CHIP 100 5% 1/10W	
R109	1-216-025-91	s	METAL, CHIP 100 5% 1/10W	
R110	1-216-049-91	s	METAL, CHIP 1k 5% 1/10W	
R111	1-216-025-91	s	METAL, CHIP 100 5% 1/10W	

Note: In this list * marked parts are design changed.
Refer to pages 18-29 to 18-31 for applicable serial numbers.

(VP-44 BOARD(for UVW-1400, NTSC))

Ref. No. or Q'ty	Part No.	SP	Description	
R112	1-216-065-00	s	METAL, CHIP 4.7k 5% 1/10W	
R113	1-216-025-91	s	METAL, CHIP 100 5% 1/10W	
R114	1-216-057-00	s	METAL, CHIP 2.2k 5% 1/10W	
R115	1-216-025-91	s	METAL, CHIP 100 5% 1/10W	
R116	1-216-073-00	s	METAL, CHIP 10k 5% 1/10W	
R117	1-216-073-00	s	METAL, CHIP 10k 5% 1/10W	
R118	1-216-025-91	s	METAL, CHIP 100 5% 1/10W	
R119	1-216-057-00	s	METAL, CHIP 2.2k 5% 1/10W	
R120	1-216-638-11	s	METAL, CHIP 300 0.5% 1/10W	
R121	1-216-065-00	s	METAL, CHIP 4.7k 5% 1/10W	
R122	1-216-638-11	s	METAL, CHIP 300 0.5% 1/10W	
R123	1-216-025-91	s	METAL, CHIP 100 5% 1/10W	
R124	1-216-049-91	s	METAL, CHIP 1k 5% 1/10W	
R125	1-216-065-00	s	METAL, CHIP 4.7k 5% 1/10W	
R126	1-216-049-91	s	METAL, CHIP 1k 5% 1/10W	
R127	1-216-073-00	s	METAL, CHIP 10k 5% 1/10W	
R128	1-216-097-91	s	METAL, CHIP 100k 5% 1/10W	
R129	1-216-025-91	s	METAL, CHIP 100 5% 1/10W	
R130	1-216-025-91	s	METAL, CHIP 100 5% 1/10W	
R131	1-208-775-11	s	METAL, CHIP 510 0.5% 1/10W	
R132	1-208-774-11	s	METAL, CHIP 470 5% 1/10W	
R133	1-216-041-00	s	METAL, CHIP 470 5% 1/10W	
R134	1-208-774-11	s	METAL, CHIP 470 5% 1/10W	
R135	1-216-025-91	s	METAL, CHIP 100 5% 1/10W	
R136	1-208-822-11	s	METAL, CHIP 47k 0.5% 1/10W	
R137	1-216-659-11	s	METAL, CHIP 2.2k 0.5% 1/10W	
R138	1-216-065-00	s	METAL, CHIP 4.7k 5% 1/10W	
R139	1-216-073-00	s	METAL, CHIP 10k 5% 1/10W	
R140	1-216-025-91	s	METAL, CHIP 100 5% 1/10W	
R141	1-216-073-00	s	METAL, CHIP 10k 5% 1/10W	
R142	1-216-081-00	s	METAL, CHIP 22k 5% 1/10W	
R143	1-216-041-00	s	METAL, CHIP 470 5% 1/10W	
R144	1-216-635-11	s	METAL, CHIP 220 0.5% 1/10W	
R145	1-216-037-00	s	METAL, CHIP 330 5% 1/10W	
R146	1-216-037-00	s	METAL, CHIP 330 5% 1/10W	
R147	1-216-065-00	s	METAL, CHIP 4.7k 5% 1/10W	
R148	1-216-065-00	s	METAL, CHIP 4.7k 5% 1/10W	
R149	1-216-651-11	s	METAL, CHIP 1k 0.5% 1/10W	
*R150	1-216-667-11	s	METAL, CHIP 4.7k 0.5% 1/10W	*22
	1-216-659-11	s	METAL, CHIP 2.2k 0.5% 1/10W	*23
R151	1-216-025-91	s	METAL, CHIP 100 5% 1/10W	
R152	1-216-057-00	s	METAL, CHIP 2.2k 5% 1/10W	
R153	1-216-057-00	s	METAL, CHIP 2.2k 5% 1/10W	
R154	1-216-037-00	s	METAL, CHIP 330 5% 1/10W	
R155	1-216-041-00	s	METAL, CHIP 470 5% 1/10W	
R156	1-216-035-00	s	METAL, CHIP 270 5% 1/10W	
R157	1-216-037-00	s	METAL, CHIP 330 5% 1/10W	
R158	1-216-065-00	s	METAL, CHIP 4.7k 5% 1/10W	
R159	1-216-077-00	s	METAL, CHIP 15k 5% 1/10W	
R160	1-216-085-00	s	METAL, CHIP 33k 5% 1/10W	
R161	1-216-073-00	s	METAL, CHIP 10k 5% 1/10W	
R162	1-216-073-00	s	METAL, CHIP 10k 5% 1/10W	
R163	1-208-806-11	s	METAL, CHIP 10k 0.5% 1/10W	
R164	1-216-661-11	s	METAL, CHIP 2.7k 0.5% 1/10W	
R165	1-216-065-00	s	METAL, CHIP 4.7k 5% 1/10W	
R166	1-216-037-00	s	METAL, CHIP 330 5% 1/10W	
R168	1-216-295-91	s	RES, CHIP 0	
R169	1-216-295-91	s	RES, CHIP 0	
R170	1-216-667-11	s	METAL, CHIP 4.7k 0.5% 1/10W	

(VP-44 BOARD(for UVW-1400, NTSC))

Ref. No. or Q'ty	Part No.	SP	Description
R202	1-208-806-11	s	METAL, CHIP 10k 0.5% 1/10W
R203	1-208-806-11	s	METAL, CHIP 10k 0.5% 1/10W
R206	1-216-049-91	s	METAL, CHIP 1k 5% 1/10W
R207	1-216-025-91	s	METAL, CHIP 100 5% 1/10W
R208	1-216-025-91	s	METAL, CHIP 100 5% 1/10W
R209	1-216-639-11	s	METAL, CHIP 330 0.5% 1/10W
R210	1-216-057-00	s	METAL, CHIP 2.2k 5% 1/10W
R211	1-216-651-11	s	METAL, CHIP 1k 0.5% 1/10W
R212	1-216-025-91	s	METAL, CHIP 100 5% 1/10W
R213	1-216-639-11	s	METAL, CHIP 330 0.5% 1/10W
R214	1-216-065-00	s	METAL, CHIP 4.7k 5% 1/10W
R215	1-216-651-11	s	METAL, CHIP 1k 0.5% 1/10W
R216	1-216-673-11	s	METAL, CHIP 8.2k 0.5% 1/10W
R217	1-208-784-11	s	METAL, CHIP 1.2k 0.5% 1/10W
R218	1-216-073-00	s	METAL, CHIP 10k 5% 1/10W
R219	1-216-073-00	s	METAL, CHIP 10k 5% 1/10W
R220	1-216-025-91	s	METAL, CHIP 100 5% 1/10W
R221	1-216-025-91	s	METAL, CHIP 100 5% 1/10W
R222	1-216-065-00	s	METAL, CHIP 4.7k 5% 1/10W
R223	1-216-025-91	s	METAL, CHIP 100 5% 1/10W
R224	1-216-049-91	s	METAL, CHIP 1k 5% 1/10W
R225	1-216-049-91	s	METAL, CHIP 1k 5% 1/10W
R226	1-216-063-91	s	METAL, CHIP 3.9k 5% 1/10W
R227	1-216-065-00	s	METAL, CHIP 4.7k 5% 1/10W
R228	1-216-025-91	s	METAL, CHIP 100 5% 1/10W
R229	1-216-055-00	s	METAL, CHIP 1.8k 5% 1/10W
R230	1-216-025-91	s	METAL, CHIP 100 5% 1/10W
R231	1-216-049-91	s	METAL, CHIP 1k 5% 1/10W
R232	1-216-025-91	s	METAL, CHIP 100 5% 1/10W
R233	1-216-055-00	s	METAL, CHIP 1.8k 5% 1/10W
R234	1-216-057-00	s	METAL, CHIP 2.2k 5% 1/10W
R235	1-216-057-00	s	METAL, CHIP 2.2k 5% 1/10W
R236	1-216-025-91	s	METAL, CHIP 100 5% 1/10W
R237	1-216-065-00	s	METAL, CHIP 4.7k 5% 1/10W
R238	1-216-065-00	s	METAL, CHIP 4.7k 5% 1/10W
R239	1-216-025-91	s	METAL, CHIP 100 5% 1/10W
R240	1-216-655-11	s	METAL, CHIP 1.5k 0.5% 1/10W
R241	1-216-663-11	s	METAL, CHIP 3.3k 0.5% 1/10W
R242	1-216-049-91	s	METAL, CHIP 1k 5% 1/10W
R243	1-216-063-91	s	METAL, CHIP 3.9k 5% 1/10W
R244	1-216-646-11	s	METAL, CHIP 620 0.5% 1/10W
R245	1-216-673-11	s	METAL, CHIP 8.2k 0.5% 1/10W
R246	1-216-057-00	s	METAL, CHIP 2.2k 5% 1/10W
R247	1-216-667-11	s	METAL, CHIP 4.7k 0.5% 1/10W
R248	1-208-799-11	s	METAL, CHIP 5.1k 0.5% 1/10W
R249	1-216-057-00	s	METAL, CHIP 2.2k 5% 1/10W
R250	1-216-113-00	s	METAL, CHIP 470k 5% 1/10W
R251	1-216-667-11	s	METAL, CHIP 4.7k 0.5% 1/10W
R253	1-208-817-11	s	METAL, CHIP 30k 0.5% 1/10W
R255	1-216-652-11	s	METAL, CHIP 1.1k 0.5% 1/10W
R256	1-216-025-91	s	METAL, CHIP 100 5% 1/10W
R257	1-216-638-11	s	METAL, CHIP 300 0.5% 1/10W
R258	1-216-665-11	s	METAL, CHIP 3.9k 0.5% 1/10W
R259	1-216-671-11	s	METAL, CHIP 6.8k 0.5% 1/10W
R260	1-216-687-11	s	METAL, CHIP 33k 0.5% 1/10W
R262	1-216-685-11	s	METAL, CHIP 27k 0.5% 1/10W
R263	1-216-073-00	s	METAL, CHIP 10k 5% 1/10W
R264	1-216-025-91	s	METAL, CHIP 100 5% 1/10W
R265	1-216-041-00	s	METAL, CHIP 470 5% 1/10W

Note: In this list * marked parts are design changed.
Refer to pages 18-29 to 18-31 for applicable serial numbers.

(VP-44 BOARD(for UVW-1400, NTSC))

Ref. No. or Q'ty	Part No.	SP	Description
R266	1-216-638-11	s	METAL, CHIP 300 0.5% 1/10W
R267	1-216-037-00	s	METAL, CHIP 330 5% 1/10W
R268	1-216-057-00	s	METAL, CHIP 2.2k 5% 1/10W
R269	1-216-041-00	s	METAL, CHIP 470 5% 1/10W
R270	1-216-638-11	s	METAL, CHIP 300 0.5% 1/10W
R271	1-216-049-91	s	METAL, CHIP 1k 5% 1/10W
R272	1-208-751-11	s	METAL, CHIP 51 0.5% 1/10W
R273	1-216-037-00	s	METAL, CHIP 330 5% 1/10W
R274	1-216-295-91	s	RES, CHIP 0
R275	1-216-089-91	s	METAL, CHIP 47k 5% 1/10W
R276	1-216-057-00	s	METAL, CHIP 2.2k 5% 1/10W
R278	1-216-025-91	s	METAL, CHIP 100 5% 1/10W
R301	1-216-629-11	s	METAL, CHIP 120 0.5% 1/10W
R302	1-216-629-11	s	METAL, CHIP 120 0.5% 1/10W
R303	1-216-633-11	s	METAL, CHIP 180 0.5% 1/10W
R304	1-216-633-11	s	METAL, CHIP 180 0.5% 1/10W
R305	1-216-025-91	s	METAL, CHIP 100 5% 1/10W
R306	1-216-049-91	s	METAL, CHIP 1k 5% 1/10W
R307	1-216-025-91	s	METAL, CHIP 100 5% 1/10W
R308	1-216-065-00	s	METAL, CHIP 4.7k 5% 1/10W
R309	1-216-025-91	s	METAL, CHIP 100 5% 1/10W
R310	1-216-025-91	s	METAL, CHIP 100 5% 1/10W
R311	1-216-057-00	s	METAL, CHIP 2.2k 5% 1/10W
R312	1-216-025-91	s	METAL, CHIP 100 5% 1/10W
R313	1-216-057-00	s	METAL, CHIP 2.2k 5% 1/10W
R314	1-216-073-00	s	METAL, CHIP 10k 5% 1/10W
R315	1-216-638-11	s	METAL, CHIP 300 0.5% 1/10W
R316	1-216-073-00	s	METAL, CHIP 10k 5% 1/10W
R317	1-216-025-91	s	METAL, CHIP 100 5% 1/10W
R318	1-216-638-11	s	METAL, CHIP 300 0.5% 1/10W
R319	1-216-065-00	s	METAL, CHIP 4.7k 5% 1/10W
R320	1-216-065-00	s	METAL, CHIP 4.7k 5% 1/10W
R321	1-216-049-91	s	METAL, CHIP 1k 5% 1/10W
R322	1-216-651-11	s	METAL, CHIP 1k 0.5% 1/10W
R323	1-216-049-91	s	METAL, CHIP 1k 5% 1/10W
R324	1-216-025-91	s	METAL, CHIP 100 5% 1/10W
R325	1-208-775-11	s	METAL, CHIP 510 0.5% 1/10W
R326	1-208-774-11	s	METAL, CHIP 470 5% 1/10W
R327	1-216-041-00	s	METAL, CHIP 470 5% 1/10W
R328	1-216-073-00	s	METAL, CHIP 10k 5% 1/10W
R329	1-216-097-91	s	METAL, CHIP 100k 5% 1/10W
R330	1-216-639-11	s	METAL, CHIP 330 0.5% 1/10W
R331	1-216-025-91	s	METAL, CHIP 100 5% 1/10W
R332	1-216-065-00	s	METAL, CHIP 4.7k 5% 1/10W
R333	1-216-073-00	s	METAL, CHIP 10k 5% 1/10W
R334	1-216-025-91	s	METAL, CHIP 100 5% 1/10W
R335	1-216-073-00	s	METAL, CHIP 10k 5% 1/10W
R336	1-216-635-11	s	METAL, CHIP 220 0.5% 1/10W
R337	1-216-041-00	s	METAL, CHIP 470 5% 1/10W
R338	1-216-037-00	s	METAL, CHIP 330 5% 1/10W
R339	1-216-037-00	s	METAL, CHIP 330 5% 1/10W
R340	1-216-065-00	s	METAL, CHIP 4.7k 5% 1/10W
R341	1-216-065-00	s	METAL, CHIP 4.7k 5% 1/10W
R342	1-216-651-11	s	METAL, CHIP 1k 0.5% 1/10W
R343	1-208-784-11	s	METAL, CHIP 1.2k 0.5% 1/10W
R344	1-216-037-00	s	METAL, CHIP 330 5% 1/10W
R345	1-216-041-00	s	METAL, CHIP 470 5% 1/10W
R346	1-216-037-00	s	METAL, CHIP 330 5% 1/10W
R347	1-216-619-11	s	METAL, CHIP 47 0.5% 1/10W

(VP-44 BOARD(for UVW-1400, NTSC))

Ref. No. or Q'ty	Part No.	SP	Description
R348	1-216-057-00	s	METAL, CHIP 2.2k 5% 1/10W
R349	1-216-025-91	s	METAL, CHIP 100 5% 1/10W
R350	1-216-065-00	s	METAL, CHIP 4.7k 5% 1/10W
R351	1-216-057-00	s	METAL, CHIP 2.2k 5% 1/10W
R352	1-216-077-00	s	METAL, CHIP 15k 5% 1/10W
R353	1-216-085-00	s	METAL, CHIP 33k 5% 1/10W
R354	1-216-073-00	s	METAL, CHIP 10k 5% 1/10W
R355	1-216-073-00	s	METAL, CHIP 10k 5% 1/10W
R356	1-208-806-11	s	METAL, CHIP 10k 0.5% 1/10W
R357	1-216-661-11	s	METAL, CHIP 2.7k 0.5% 1/10W
R358	1-216-065-00	s	METAL, CHIP 4.7k 5% 1/10W
R359	1-216-037-00	s	METAL, CHIP 330 5% 1/10W
R401	1-216-025-91	s	METAL, CHIP 100 5% 1/10W
R402	1-216-025-91	s	METAL, CHIP 100 5% 1/10W
R403	1-216-639-11	s	METAL, CHIP 330 0.5% 1/10W
R404	1-216-057-00	s	METAL, CHIP 2.2k 5% 1/10W
R405	1-216-639-11	s	METAL, CHIP 330 0.5% 1/10W
R406	1-216-025-91	s	METAL, CHIP 100 5% 1/10W
R407	1-216-065-00	s	METAL, CHIP 4.7k 5% 1/10W
R408	1-216-025-91	s	METAL, CHIP 100 5% 1/10W
R409	1-216-065-00	s	METAL, CHIP 4.7k 5% 1/10W
R410	1-216-651-11	s	METAL, CHIP 1k 0.5% 1/10W
R411	1-216-025-91	s	METAL, CHIP 100 5% 1/10W
R412	1-216-055-00	s	METAL, CHIP 1.8k 5% 1/10W
R413	1-216-025-91	s	METAL, CHIP 100 5% 1/10W
R414	1-216-673-11	s	METAL, CHIP 8.2k 0.5% 1/10W
R415	1-208-774-11	s	METAL, CHIP 470 5% 1/10W
R416	1-216-025-91	s	METAL, CHIP 100 5% 1/10W
R417	1-216-055-00	s	METAL, CHIP 1.8k 5% 1/10W
R418	1-208-784-11	s	METAL, CHIP 1.2k 0.5% 1/10W
R419	1-216-065-00	s	METAL, CHIP 4.7k 5% 1/10W
R420	1-216-651-11	s	METAL, CHIP 1k 0.5% 1/10W
R421	1-216-649-11	s	METAL, CHIP 820 0.5% 1/10W
R422	1-216-664-11	s	METAL, CHIP 3.6k 0.5% 1/10W
R423	1-216-073-00	s	METAL, CHIP 10k 5% 1/10W
R424	1-216-073-00	s	METAL, CHIP 10k 5% 1/10W
R425	1-216-025-91	s	METAL, CHIP 100 5% 1/10W
R426	1-208-806-11	s	METAL, CHIP 10k 0.5% 1/10W
R427	1-216-065-00	s	METAL, CHIP 4.7k 5% 1/10W
R428	1-216-025-91	s	METAL, CHIP 100 5% 1/10W
R429	1-216-057-00	s	METAL, CHIP 2.2k 5% 1/10W
R430	1-216-049-91	s	METAL, CHIP 1k 5% 1/10W
R431	1-216-063-91	s	METAL, CHIP 3.9k 5% 1/10W
R432	1-216-049-91	s	METAL, CHIP 1k 5% 1/10W
R433	1-216-057-00	s	METAL, CHIP 2.2k 5% 1/10W
R434	1-216-057-00	s	METAL, CHIP 2.2k 5% 1/10W
R435	1-216-025-91	s	METAL, CHIP 100 5% 1/10W
R436	1-216-025-91	s	METAL, CHIP 100 5% 1/10W
R437	1-216-065-00	s	METAL, CHIP 4.7k 5% 1/10W
R438	1-216-049-91	s	METAL, CHIP 1k 5% 1/10W
R439	1-216-063-91	s	METAL, CHIP 3.9k 5% 1/10W
R440	1-216-665-11	s	METAL, CHIP 3.9k 0.5% 1/10W
R441	1-208-801-11	s	METAL, CHIP 6.2k 0.5% 1/10W
R442	1-216-057-00	s	METAL, CHIP 2.2k 5% 1/10W
R443	1-216-113-00	s	METAL, CHIP 470k 5% 1/10W
R444	1-216-671-11	s	METAL, CHIP 6.8k 0.5% 1/10W
R445	1-216-119-00	s	METAL, CHIP 820k 5% 1/10W
R446	1-216-687-11	s	METAL, CHIP 33k 0.5% 1/10W
R447	1-208-814-11	s	METAL, CHIP 22k 0.5% 1/10W

Note: In this list * marked parts are design changed.
Refer to pages 18-29 to 18-31 for applicable serial numbers.

(VP-44 BOARD(for UVW-1400, NTSC))

Ref. No. or Q'ty	Part No.	SP	Description	
R448	1-216-651-11	s	METAL, CHIP 1k 0.5% 1/10W	
R449	1-216-025-91	s	METAL, CHIP 100 5% 1/10W	
R450	1-216-639-11	s	METAL, CHIP 330 0.5% 1/10W	
R451	1-216-665-11	s	METAL, CHIP 3.9k 0.5% 1/10W	
R452	1-216-671-11	s	METAL, CHIP 6.8k 0.5% 1/10W	
R453	1-216-689-11	s	METAL, CHIP 39k 0.5% 1/10W	
R454	1-216-121-91	s	METAL, CHIP 1M 5% 1/10W	
R455	1-216-685-11	s	METAL, CHIP 27k 0.5% 1/10W	
R456	1-216-073-00	s	METAL, CHIP 10k 5% 1/10W	
R457	1-216-025-91	s	METAL, CHIP 100 5% 1/10W	
R458	1-216-041-00	s	METAL, CHIP 470 5% 1/10W	
R459	1-216-638-11	s	METAL, CHIP 300 0.5% 1/10W	
R460	1-216-049-91	s	METAL, CHIP 1k 5% 1/10W	
R461	1-208-751-11	s	METAL, CHIP 51 0.5% 1/10W	
R462	1-216-037-00	s	METAL, CHIP 330 5% 1/10W	
R463	1-216-057-00	s	METAL, CHIP 2.2k 5% 1/10W	
R464	1-216-089-91	s	METAL, CHIP 47k 5% 1/10W	
*R500	1-247-855-11	s	CARBON 10k 5% 1/4W	*8
	1-216-073-00	s	METAL, CHIP 10k 5% 1/10W	*9
R501	1-208-806-11	s	METAL, CHIP 10k 0.5% 1/10W	
R502	1-208-806-11	s	METAL, CHIP 10k 0.5% 1/10W	
R503	1-216-049-91	s	METAL, CHIP 1k 5% 1/10W	
R504	1-216-049-91	s	METAL, CHIP 1k 5% 1/10W	
R505	1-216-089-91	s	METAL, CHIP 47k 5% 1/10W	
R506	1-216-049-91	s	METAL, CHIP 1k 5% 1/10W	
R507	1-208-806-11	s	METAL, CHIP 10k 0.5% 1/10W	
R508	1-216-687-11	s	METAL, CHIP 33k 0.5% 1/10W	
R509	1-216-057-00	s	METAL, CHIP 2.2k 5% 1/10W	
R510	1-216-049-91	s	METAL, CHIP 1k 5% 1/10W	
R511	1-216-121-91	s	METAL, CHIP 1M 5% 1/10W	
R512	1-216-049-91	s	METAL, CHIP 1k 5% 1/10W	
R513	1-216-049-91	s	METAL, CHIP 1k 5% 1/10W	
R514	1-216-033-00	s	METAL, CHIP 220 5% 1/10W	
R515	1-216-045-00	s	METAL, CHIP 680 5% 1/10W	
R516	1-216-077-00	s	METAL, CHIP 15k 5% 1/10W	
R517	1-216-073-00	s	METAL, CHIP 10k 5% 1/10W	
R518	1-216-017-91	s	METAL, CHIP 47 5% 1/10W	
R519	1-216-027-00	s	METAL, CHIP 120 5% 1/10W	
R520	1-216-647-11	s	METAL, CHIP 680 0.5% 1/10W	
R521	1-216-659-11	s	METAL, CHIP 2.2k 0.5% 1/10W	
R522	1-216-651-11	s	METAL, CHIP 1k 0.5% 1/10W	
R523	1-216-025-91	s	METAL, CHIP 100 5% 1/10W	
R524	1-216-057-00	s	METAL, CHIP 2.2k 5% 1/10W	
R525	1-216-057-00	s	METAL, CHIP 2.2k 5% 1/10W	
R526	1-216-025-91	s	METAL, CHIP 100 5% 1/10W	
R527	1-216-041-00	s	METAL, CHIP 470 5% 1/10W	
R528	1-216-627-11	s	METAL, CHIP 100 0.5% 1/10W	
R529	1-216-661-11	s	METAL, CHIP 2.7k 0.5% 1/10W	
R530	1-216-295-91	s	RES, CHIP 0	
R531	1-216-057-00	s	METAL, CHIP 2.2k 5% 1/10W	
R532	1-216-025-91	s	METAL, CHIP 100 5% 1/10W	
R533	1-216-017-91	s	METAL, CHIP 47 5% 1/10W	
R534	1-216-055-00	s	METAL, CHIP 1.8k 5% 1/10W	
R535	1-216-041-00	s	METAL, CHIP 470 5% 1/10W	
R536	1-208-774-11	s	METAL, CHIP 470 5% 1/10W	
R537	1-208-784-11	s	METAL, CHIP 1.2k 0.5% 1/10W	
R538	1-208-774-11	s	METAL, CHIP 470 5% 1/10W	
R539	1-208-774-11	s	METAL, CHIP 470 5% 1/10W	
R540	1-216-025-91	s	METAL, CHIP 100 5% 1/10W	

(VP-44 BOARD(for UVW-1400, NTSC))

Ref. No. or Q'ty	Part No.	SP	Description
R541	1-216-041-00	s	METAL, CHIP 470 5% 1/10W
R542	1-216-025-91	s	METAL, CHIP 100 5% 1/10W
R544	1-216-061-00	s	METAL, CHIP 3.3k 5% 1/10W
R546	1-216-025-91	s	METAL, CHIP 100 5% 1/10W
R547	1-216-049-91	s	METAL, CHIP 1k 5% 1/10W
R548	1-216-049-91	s	METAL, CHIP 1k 5% 1/10W
R549	1-216-639-11	s	METAL, CHIP 330 0.5% 1/10W
R550	1-216-651-11	s	METAL, CHIP 1k 0.5% 1/10W
R551	1-216-041-00	s	METAL, CHIP 470 5% 1/10W
R552	1-208-784-11	s	METAL, CHIP 1.2k 0.5% 1/10W
R553	1-216-065-00	s	METAL, CHIP 4.7k 5% 1/10W
R554	1-216-651-11	s	METAL, CHIP 1k 0.5% 1/10W
R555	1-216-057-00	s	METAL, CHIP 2.2k 5% 1/10W
R556	1-216-049-91	s	METAL, CHIP 1k 5% 1/10W
R557	1-216-049-91	s	METAL, CHIP 1k 5% 1/10W
R558	1-216-025-91	s	METAL, CHIP 100 5% 1/10W
R559	1-216-113-00	s	METAL, CHIP 470k 5% 1/10W
R560	1-216-049-91	s	METAL, CHIP 1k 5% 1/10W
R561	1-216-053-00	s	METAL, CHIP 1.5k 5% 1/10W
R562	1-216-057-00	s	METAL, CHIP 2.2k 5% 1/10W
R563	1-216-049-91	s	METAL, CHIP 1k 5% 1/10W
R564	1-216-049-91	s	METAL, CHIP 1k 5% 1/10W
R565	1-216-057-00	s	METAL, CHIP 2.2k 5% 1/10W
R566	1-216-025-91	s	METAL, CHIP 100 5% 1/10W
R567	1-216-057-00	s	METAL, CHIP 2.2k 5% 1/10W
R568	1-216-057-00	s	METAL, CHIP 2.2k 5% 1/10W
R569	1-216-057-00	s	METAL, CHIP 2.2k 5% 1/10W
R570	1-216-041-00	s	METAL, CHIP 470 5% 1/10W
R571	1-216-057-00	s	METAL, CHIP 2.2k 5% 1/10W
R572	1-216-041-00	s	METAL, CHIP 470 5% 1/10W
R573	1-216-041-00	s	METAL, CHIP 470 5% 1/10W
R574	1-216-041-00	s	METAL, CHIP 470 5% 1/10W
R575	1-216-073-00	s	METAL, CHIP 10k 5% 1/10W
R576	1-216-049-91	s	METAL, CHIP 1k 5% 1/10W
R577	1-216-049-91	s	METAL, CHIP 1k 5% 1/10W
R578	1-216-049-91	s	METAL, CHIP 1k 5% 1/10W
R579	1-216-041-00	s	METAL, CHIP 470 5% 1/10W
R580	1-216-049-91	s	METAL, CHIP 1k 5% 1/10W
R581	1-216-053-00	s	METAL, CHIP 1.5k 5% 1/10W
R582	1-216-025-91	s	METAL, CHIP 100 5% 1/10W
R583	1-216-017-91	s	METAL, CHIP 47 5% 1/10W
R584	1-216-017-91	s	METAL, CHIP 47 5% 1/10W
R585	1-216-667-11	s	METAL, CHIP 4.7k 0.5% 1/10W
R586	1-216-651-11	s	METAL, CHIP 1k 0.5% 1/10W
R587	1-216-073-00	s	METAL, CHIP 10k 5% 1/10W
R588	1-208-784-11	s	METAL, CHIP 1.2k 0.5% 1/10W
R589	1-216-049-91	s	METAL, CHIP 1k 5% 1/10W
R590	1-216-081-00	s	METAL, CHIP 22k 5% 1/10W
R591	1-216-624-11	s	METAL, CHIP 75 0.5% 1/10W
R592	1-216-624-11	s	METAL, CHIP 75 0.5% 1/10W
R593	1-216-624-11	s	METAL, CHIP 75 0.5% 1/10W
R594	1-216-624-11	s	METAL, CHIP 75 0.5% 1/10W
R595	1-216-097-91	s	METAL, CHIP 100k 5% 1/10W
R601-606	1-216-049-91	s	METAL, CHIP 1k 5% 1/10W
R607	1-216-057-00	s	METAL, CHIP 2.2k 5% 1/10W
R608	1-216-057-00	s	METAL, CHIP 2.2k 5% 1/10W
R609	1-216-033-00	s	METAL, CHIP 220 5% 1/10W
R610	1-216-033-00	s	METAL, CHIP 220 5% 1/10W
R611	1-216-045-00	s	METAL, CHIP 680 5% 1/10W

Note: In this list * marked parts are design changed.
Refer to pages 18-29 to 18-31 for applicable serial numbers.

(VP-44 BOARD(for UVW-1400, NTSC))

Ref. No. or Q'ty	Part No.	SP	Description
R612	1-216-045-00	s	METAL, CHIP 680 5% 1/10W
R613	1-216-077-00	s	METAL, CHIP 15k 5% 1/10W
R614	1-216-077-00	s	METAL, CHIP 15k 5% 1/10W
R615	1-216-017-91	s	METAL, CHIP 47 5% 1/10W
R616	1-216-017-91	s	METAL, CHIP 47 5% 1/10W
R617	1-216-027-00	s	METAL, CHIP 120 5% 1/10W
R618	1-216-027-00	s	METAL, CHIP 120 5% 1/10W
R621	1-216-049-91	s	METAL, CHIP 1k 5% 1/10W
R622	1-216-049-91	s	METAL, CHIP 1k 5% 1/10W
R623	1-216-057-00	s	METAL, CHIP 2.2k 5% 1/10W
R624	1-216-057-00	s	METAL, CHIP 2.2k 5% 1/10W
R625	1-216-049-91	s	METAL, CHIP 1k 5% 1/10W
R626	1-216-057-00	s	METAL, CHIP 2.2k 5% 1/10W
R629	1-216-049-91	s	METAL, CHIP 1k 5% 1/10W
R630	1-216-121-91	s	METAL, CHIP 1M 5% 1/10W
R631	1-216-121-91	s	METAL, CHIP 1M 5% 1/10W
R632	1-216-659-11	s	METAL, CHIP 2.2k 0.5% 1/10W
R633	1-216-049-91	s	METAL, CHIP 1k 5% 1/10W
R634	1-216-049-91	s	METAL, CHIP 1k 5% 1/10W
R635	1-216-089-91	s	METAL, CHIP 47k 5% 1/10W
R636	1-216-049-91	s	METAL, CHIP 1k 5% 1/10W
R637	1-216-089-91	s	METAL, CHIP 47k 5% 1/10W
R638	1-216-049-91	s	METAL, CHIP 1k 5% 1/10W
R639	1-216-049-91	s	METAL, CHIP 1k 5% 1/10W
R640	1-216-049-91	s	METAL, CHIP 1k 5% 1/10W
R643	1-216-057-00	s	METAL, CHIP 2.2k 5% 1/10W
R644	1-216-057-00	s	METAL, CHIP 2.2k 5% 1/10W
R646	1-216-661-11	s	METAL, CHIP 2.7k 0.5% 1/10W
R647	1-208-800-11	s	METAL, CHIP 5.6k 0.5% 1/10W
R648	1-216-065-00	s	METAL, CHIP 4.7k 5% 1/10W
R649	1-216-065-00	s	METAL, CHIP 4.7k 5% 1/10W
R650	1-216-061-00	s	METAL, CHIP 3.3k 5% 1/10W
R651	1-216-057-00	s	METAL, CHIP 2.2k 5% 1/10W
R652	1-216-057-00	s	METAL, CHIP 2.2k 5% 1/10W
R653	1-216-649-11	s	METAL, CHIP 820 0.5% 1/10W
R654	1-216-065-00	s	METAL, CHIP 4.7k 5% 1/10W
R655	1-216-065-00	s	METAL, CHIP 4.7k 5% 1/10W
R657	1-216-041-00	s	METAL, CHIP 470 5% 1/10W
R658	1-216-041-00	s	METAL, CHIP 470 5% 1/10W
R659	1-216-049-91	s	METAL, CHIP 1k 5% 1/10W
R660	1-216-037-00	s	METAL, CHIP 330 5% 1/10W
R662	1-216-079-00	s	METAL, CHIP 18k 5% 1/10W
R663	1-216-077-00	s	METAL, CHIP 15k 5% 1/10W
R664	1-216-081-00	s	METAL, CHIP 22k 5% 1/10W
R665	1-216-081-00	s	METAL, CHIP 22k 5% 1/10W
R666	1-216-097-91	s	METAL, CHIP 100k 5% 1/10W
R667	1-216-049-91	s	METAL, CHIP 1k 5% 1/10W
R671	1-216-655-11	s	METAL, CHIP 1.5k 0.5% 1/10W
R672	1-216-049-91	s	METAL, CHIP 1k 5% 1/10W
R673	1-216-049-91	s	METAL, CHIP 1k 5% 1/10W
R674	1-216-655-11	s	METAL, CHIP 1.5k 0.5% 1/10W
R675	1-216-049-91	s	METAL, CHIP 1k 5% 1/10W
R676	1-216-057-00	s	METAL, CHIP 2.2k 5% 1/10W
R677	1-216-647-11	s	METAL, CHIP 680 0.5% 1/10W
R679	1-216-661-11	s	METAL, CHIP 2.7k 0.5% 1/10W
R680	1-216-057-00	s	METAL, CHIP 2.2k 5% 1/10W
R681	1-216-045-00	s	METAL, CHIP 680 5% 1/10W
R682	1-216-639-11	s	METAL, CHIP 330 0.5% 1/10W
R683	1-216-651-11	s	METAL, CHIP 1k 0.5% 1/10W

(VP-44 BOARD(for UVW-1400, NTSC))

Ref. No. or Q'ty	Part No.	SP	Description	
R684	1-216-049-91	s	METAL, CHIP 1k 5% 1/10W	
R685	1-216-025-91	s	METAL, CHIP 100 5% 1/10W	
R686	1-216-025-91	s	METAL, CHIP 100 5% 1/10W	
R687	1-216-081-00	s	METAL, CHIP 22k 5% 1/10W	
R688	1-216-095-00	s	METAL, CHIP 82k 5% 1/10W	
R689	1-216-624-11	s	METAL, CHIP 75 0.5% 1/10W	
R690	1-216-073-00	s	METAL, CHIP 10k 5% 1/10W	
R691	1-216-073-00	s	METAL, CHIP 10k 5% 1/10W	
R692	1-208-785-11	s	METAL, CHIP 1.3k 0.5% 1/10W	
R693	1-216-652-11	s	METAL, CHIP 1.1k 0.5% 1/10W	
R694	1-216-666-11	s	METAL, CHIP 4.3k 0.5% 1/10W	
*R695	1-216-295-91	s	RES, CHIP 0	*9
R701	1-216-025-91	s	METAL, CHIP 100 5% 1/10W	
R702	1-216-025-91	s	METAL, CHIP 100 5% 1/10W	
R703	1-216-049-91	s	METAL, CHIP 1k 5% 1/10W	
R704	1-216-049-91	s	METAL, CHIP 1k 5% 1/10W	
R705	1-216-049-91	s	METAL, CHIP 1k 5% 1/10W	
R706	1-216-049-91	s	METAL, CHIP 1k 5% 1/10W	
R707	1-208-784-11	s	METAL, CHIP 1.2k 0.5% 1/10W	
R708	1-208-784-11	s	METAL, CHIP 1.2k 0.5% 1/10W	
R709	1-216-065-00	s	METAL, CHIP 4.7k 5% 1/10W	
R710	1-216-065-00	s	METAL, CHIP 4.7k 5% 1/10W	
R711	1-216-025-91	s	METAL, CHIP 100 5% 1/10W	
R712	1-216-025-91	s	METAL, CHIP 100 5% 1/10W	
R713-718	1-216-049-91	s	METAL, CHIP 1k 5% 1/10W	
R719	1-216-037-00	s	METAL, CHIP 330 5% 1/10W	
R720	1-216-037-00	s	METAL, CHIP 330 5% 1/10W	
R721	1-216-025-91	s	METAL, CHIP 100 5% 1/10W	
R722	1-216-025-91	s	METAL, CHIP 100 5% 1/10W	
R723	1-216-025-91	s	METAL, CHIP 100 5% 1/10W	
R724	1-216-025-91	s	METAL, CHIP 100 5% 1/10W	
R725	1-216-065-00	s	METAL, CHIP 4.7k 5% 1/10W	
R726	1-216-065-00	s	METAL, CHIP 4.7k 5% 1/10W	
R727	1-216-065-00	s	METAL, CHIP 4.7k 5% 1/10W	
R728	1-216-065-00	s	METAL, CHIP 4.7k 5% 1/10W	
R729	1-216-041-00	s	METAL, CHIP 470 5% 1/10W	
R730	1-216-041-00	s	METAL, CHIP 470 5% 1/10W	
R731	1-216-049-91	s	METAL, CHIP 1k 5% 1/10W	
R732	1-216-049-91	s	METAL, CHIP 1k 5% 1/10W	
R733	1-208-800-11	s	METAL, CHIP 5.6k 0.5% 1/10W	
R734	1-216-659-11	s	METAL, CHIP 2.2k 0.5% 1/10W	
R735	1-216-057-00	s	METAL, CHIP 2.2k 5% 1/10W	
R736	1-208-800-11	s	METAL, CHIP 5.6k 0.5% 1/10W	
R737	1-216-659-11	s	METAL, CHIP 2.2k 0.5% 1/10W	
R738	1-216-055-00	s	METAL, CHIP 1.8k 5% 1/10W	
R739	1-216-017-91	s	METAL, CHIP 47 5% 1/10W	
R740	1-216-017-91	s	METAL, CHIP 47 5% 1/10W	
R741	1-208-774-11	s	METAL, CHIP 470 5% 1/10W	
R742	1-208-774-11	s	METAL, CHIP 470 5% 1/10W	
R743	1-208-784-11	s	METAL, CHIP 1.2k 0.5% 1/10W	
R744	1-208-774-11	s	METAL, CHIP 470 5% 1/10W	
R745	1-208-774-11	s	METAL, CHIP 470 5% 1/10W	
R746	1-208-784-11	s	METAL, CHIP 1.2k 0.5% 1/10W	
R747	1-208-774-11	s	METAL, CHIP 470 5% 1/10W	
R748	1-216-041-00	s	METAL, CHIP 470 5% 1/10W	
R749	1-216-663-11	s	METAL, CHIP 3.3k 0.5% 1/10W	
R750	1-216-663-11	s	METAL, CHIP 3.3k 0.5% 1/10W	
R751	1-216-651-11	s	METAL, CHIP 1k 0.5% 1/10W	
R752	1-216-651-11	s	METAL, CHIP 1k 0.5% 1/10W	

Note: In this list * marked parts are design changed.
Refer to pages 18-29 to 18-31 for applicable serial numbers.

(VP-44 BOARD(for UVW-1400, NTSC))

Ref. No. or Q'ty	Part No.	SP	Description
R755	1-216-639-11	s	METAL, CHIP 330 0.5% 1/10W
R758	1-216-639-11	s	METAL, CHIP 330 0.5% 1/10W
R759	1-216-065-00	s	METAL, CHIP 4.7k 5% 1/10W
R760	1-216-065-00	s	METAL, CHIP 4.7k 5% 1/10W
R761	1-216-624-11	s	METAL, CHIP 75 0.5% 1/10W
R762	1-216-624-11	s	METAL, CHIP 75 0.5% 1/10W
R763-768	1-216-097-91	s	METAL, CHIP 100k 5% 1/10W
R769-775	1-216-049-91	s	METAL, CHIP 1k 5% 1/10W
R776	1-216-113-00	s	METAL, CHIP 470k 5% 1/10W
R777	1-216-049-91	s	METAL, CHIP 1k 5% 1/10W
R778	1-216-049-91	s	METAL, CHIP 1k 5% 1/10W
R779	1-216-049-91	s	METAL, CHIP 1k 5% 1/10W
R780	1-216-097-91	s	METAL, CHIP 100k 5% 1/10W
R781	1-216-049-91	s	METAL, CHIP 1k 5% 1/10W
R782	1-216-097-91	s	METAL, CHIP 100k 5% 1/10W
R784	1-216-049-91	s	METAL, CHIP 1k 5% 1/10W
RV101	1-241-785-11	s	RES, ADJ METAL 10k
RV102	1-241-785-11	s	RES, ADJ METAL 10k
RV103	1-241-761-11	s	RES, ADJ METAL 1k
RV201	1-241-763-11	s	RES, ADJ METAL 4.7k
RV301	1-241-785-11	s	RES, ADJ METAL 10k
RV302	1-241-785-11	s	RES, ADJ METAL 10k
RV303	1-241-761-11	s	RES, ADJ METAL 1k
RV401	1-241-764-11	s	RES, ADJ METAL 10k
RV501	1-241-761-11	s	RES, ADJ METAL 1k
RV502	1-241-763-11	s	RES, ADJ METAL 4.7k
RV503	1-241-762-11	s	RES, ADJ METAL 2.2k
RV504	1-241-761-11	s	RES, ADJ METAL 1k
RV505	1-241-760-11	s	RES, ADJ METAL 470
RV506-511	1-241-761-11	s	RES, ADJ METAL 1k
RV512	1-241-758-11	s	RES, ADJ METAL 100
RV602	1-241-787-11	s	RES, ADJ METAL 47k
RV603	1-241-787-11	s	RES, ADJ METAL 47k
RV604	1-241-783-11	s	RES, ADJ METAL 2.2k
RV605	1-241-784-11	s	RES, ADJ METAL 4.7k
RV606	1-241-784-11	s	RES, ADJ METAL 4.7k
RV607	1-241-779-11	s	RES, ADJ METAL 100
RV701	1-241-783-11	s	RES, ADJ METAL 2.2k
RV702	1-241-783-11	s	RES, ADJ METAL 2.2k
RV703	1-241-761-11	s	RES, ADJ METAL 1k
RV704	1-241-761-11	s	RES, ADJ METAL 1k
RV705	1-241-763-11	s	RES, ADJ METAL 4.7k
RV706	1-241-763-11	s	RES, ADJ METAL 4.7k
RV707	1-241-760-11	s	RES, ADJ METAL 470
RV708	1-241-760-11	s	RES, ADJ METAL 470
RV709	1-241-761-11	s	RES, ADJ METAL 1k
RV710	1-241-761-11	s	RES, ADJ METAL 1k
TH201	1-807-972-11	s	THERMISTOR SV-1715 1.25k
TH401	1-807-972-11	s	THERMISTOR SV-1715 1.25k
TH601	1-807-972-11	s	THERMISTOR SV-1715 1.25k

VP-44A BOARD(for UVW-1200, NTSC)

Ref. No. or Q'ty	Part No.	SP	Description	
VP-44A board is used for UVW-1200.				
1pc	A-8275-567-A	o	MOUNTED CIRCUIT BOARD, VP-44A	
1pc	3-182-386-02	o	PLATE, SHIELD (L), CARD	
1pc	7-621-759-45	s	SCREW, +PSW2.6x6	
1pc	3-179-084-01	s	LEVER (R), PC BOARD	
1pc	3-179-085-01	s	LEVER (L), PC BOARD	
*C51	1-163-033-91	s	CERAMIC, CHIP 0.022uF 50V	*9
C101	1-163-033-91	s	CERAMIC, CHIP 0.022uF 50V	
C102	1-163-033-91	s	CERAMIC, CHIP 0.022uF 50V	
C103	1-163-275-11	s	CERAMIC, CHIP 0.001uF 5% 50V	
C104	1-163-033-91	s	CERAMIC, CHIP 0.022uF 50V	
C105	1-163-033-91	s	CERAMIC, CHIP 0.022uF 50V	
C106	1-126-933-11	s	ELECT 100uF 20% 16V	
C107	1-163-033-91	s	CERAMIC, CHIP 0.022uF 50V	
C108	1-163-033-91	s	CERAMIC, CHIP 0.022uF 50V	
C109	1-163-108-00	s	CERAMIC, CHIP 43pF 5% 50V	
C110	1-163-249-11	s	CERAMIC, CHIP 82pF 5% 50V	
C111	1-163-108-00	s	CERAMIC, CHIP 43pF 5% 50V	
C112	1-124-903-11	s	ELECT 1uF 20% 50V	
C113	1-124-903-11	s	ELECT 1uF 20% 50V	
C114	1-163-275-11	s	CERAMIC, CHIP 0.001uF 5% 50V	
C115	1-163-033-91	s	CERAMIC, CHIP 0.022uF 50V	
C116	1-163-033-91	s	CERAMIC, CHIP 0.022uF 50V	
C117	1-163-033-91	s	CERAMIC, CHIP 0.022uF 50V	
C118	1-163-245-11	s	CERAMIC, CHIP 56pF 5% 50V	
C119	1-163-235-11	s	CERAMIC, CHIP 22pF 5% 50V	
C120-127	1-163-033-91	s	CERAMIC, CHIP 0.022uF 50V	
C128	1-163-133-00	s	CERAMIC, CHIP 470pF 5% 50V	
C129	1-163-033-91	s	CERAMIC, CHIP 0.022uF 50V	
C130	1-163-033-91	s	CERAMIC, CHIP 0.022uF 50V	
C131	1-126-933-11	s	ELECT 100uF 20% 16V	
C132	1-163-033-91	s	CERAMIC, CHIP 0.022uF 50V	
C133	1-163-113-00	s	CERAMIC, CHIP 68pF 5% 50V	
C134-142	1-163-033-91	s	CERAMIC, CHIP 0.022uF 50V	
C143	1-126-933-11	s	ELECT 100uF 20% 16V	
C144	1-126-933-11	s	ELECT 100uF 20% 16V	
C145	1-126-933-11	s	ELECT 100uF 20% 16V	
C146	1-126-933-11	s	ELECT 100uF 20% 16V	
C147	1-163-231-11	s	CERAMIC, CHIP 15pF 5% 50V	
C148	1-163-241-11	s	CERAMIC, CHIP 39pF 5% 50V	
C149	1-163-033-91	s	CERAMIC, CHIP 0.022uF 50V	
C150	1-126-933-11	s	ELECT 100uF 20% 16V	
C201-205	1-163-033-91	s	CERAMIC, CHIP 0.022uF 50V	
C207-212	1-163-033-91	s	CERAMIC, CHIP 0.022uF 50V	
C213	1-163-222-11	s	CERAMIC, CHIP 5pF 50V	
C214	1-163-222-11	s	CERAMIC, CHIP 5pF 50V	
C215	1-126-925-11	s	ELECT 470uF 20% 10V	
C216	1-163-033-91	s	CERAMIC, CHIP 0.022uF 50V	
C217	1-163-033-91	s	CERAMIC, CHIP 0.022uF 50V	
C218	1-163-033-91	s	CERAMIC, CHIP 0.022uF 50V	
C219	1-163-227-11	s	CERAMIC, CHIP 10pF 5% 50V	
C220	1-164-161-11	s	CERAMIC, CHIP 0.0022uF 10% 100V	
C221	1-163-091-00	s	CERAMIC, CHIP 8pF 50V	
C222	1-163-033-91	s	CERAMIC, CHIP 0.022uF 50V	
C223	1-163-033-91	s	CERAMIC, CHIP 0.022uF 50V	
C224	1-126-925-11	s	ELECT 470uF 20% 10V	
C225	1-126-925-11	s	ELECT 470uF 20% 10V	
C226-230	1-163-033-91	s	CERAMIC, CHIP 0.022uF 50V	

Note: In this list * marked parts are design changed.
Refer to pages 18-29 to 18-31 for applicable serial numbers.

(VP-44A BOARD(for UVW-1200, NTSC))

Ref. No. or Q'ty	Part No.	SP	Description
C231	1-126-925-11	s	ELECT 470uF 20% 10V
C232	1-163-033-91	s	CERAMIC, CHIP 0.022uF 50V
C234	1-107-552-11	s	MICA, CHIP 150pF 1% 50V
C235	1-126-933-11	s	ELECT 100uF 20% 16V
C236	1-163-033-91	s	CERAMIC, CHIP 0.022uF 50V
C237	1-126-963-11	s	ELECT 4.7uF 20% 50V
C238	1-163-235-11	s	CERAMIC, CHIP 22pF 5% 50V
C239	1-163-114-00	s	CERAMIC, CHIP 75pF 5% 50V
C240	1-163-033-91	s	CERAMIC, CHIP 0.022uF 50V
C241	1-163-243-11	s	CERAMIC, CHIP 47pF 5% 50V
C242	1-163-033-91	s	CERAMIC, CHIP 0.022uF 50V
C243	1-163-033-91	s	CERAMIC, CHIP 0.022uF 50V
C244	1-163-033-91	s	CERAMIC, CHIP 0.022uF 50V
C245	1-126-925-11	s	ELECT 470uF 20% 10V
C246	1-126-933-11	s	ELECT 100uF 20% 16V
C247	1-163-033-91	s	CERAMIC, CHIP 0.022uF 50V
C248	1-163-033-91	s	CERAMIC, CHIP 0.022uF 50V
C249	1-126-933-11	s	ELECT 100uF 20% 16V
C250	1-126-933-11	s	ELECT 100uF 20% 16V
C251	1-126-964-11	s	ELECT 10uF 20% 50V
C253	1-163-033-91	s	CERAMIC, CHIP 0.022uF 50V
C301	1-163-033-91	s	CERAMIC, CHIP 0.022uF 50V
C302	1-163-033-91	s	CERAMIC, CHIP 0.022uF 50V
C303	1-163-275-11	s	CERAMIC, CHIP 0.001uF 5% 50V
C304	1-163-033-91	s	CERAMIC, CHIP 0.022uF 50V
C305	1-126-933-11	s	ELECT 100uF 20% 16V
C306	1-163-033-91	s	CERAMIC, CHIP 0.022uF 50V
C307	1-163-033-91	s	CERAMIC, CHIP 0.022uF 50V
C308	1-163-033-91	s	CERAMIC, CHIP 0.022uF 50V
C309	1-163-110-00	s	CERAMIC, CHIP 51pF 5% 50V
C310	1-163-251-11	s	CERAMIC, CHIP 100pF 5% 50V
C311	1-163-110-00	s	CERAMIC, CHIP 51pF 5% 50V
C312	1-124-903-11	s	ELECT 1uF 20% 50V
C313	1-124-903-11	s	ELECT 1uF 20% 50V
C314	1-163-275-11	s	CERAMIC, CHIP 0.001uF 5% 50V
C315	1-163-135-00	s	CERAMIC, CHIP 560pF 5% 50V
C316	1-163-257-11	s	CERAMIC, CHIP 180pF 5% 50V
C317	1-163-033-91	s	CERAMIC, CHIP 0.022uF 50V
C318	1-163-033-91	s	CERAMIC, CHIP 0.022uF 50V
C319	1-163-243-11	s	CERAMIC, CHIP 47pF 5% 50V
C320	1-163-033-91	s	CERAMIC, CHIP 0.022uF 50V
C321	1-163-033-91	s	CERAMIC, CHIP 0.022uF 50V
C322	1-163-235-11	s	CERAMIC, CHIP 22pF 5% 50V
C323	1-163-033-91	s	CERAMIC, CHIP 0.022uF 50V
C324	1-163-033-91	s	CERAMIC, CHIP 0.022uF 50V
C325	1-163-033-91	s	CERAMIC, CHIP 0.022uF 50V
C326	1-163-033-91	s	CERAMIC, CHIP 0.022uF 50V
C327	1-163-133-00	s	CERAMIC, CHIP 470pF 5% 50V
C328	1-163-033-91	s	CERAMIC, CHIP 0.022uF 50V
C329	1-163-033-91	s	CERAMIC, CHIP 0.022uF 50V
C330	1-163-033-91	s	CERAMIC, CHIP 0.022uF 50V
C331	1-163-033-91	s	CERAMIC, CHIP 0.022uF 50V
C332	1-126-933-11	s	ELECT 100uF 20% 16V
C333	1-163-033-91	s	CERAMIC, CHIP 0.022uF 50V
C334	1-163-253-11	s	CERAMIC, CHIP 120pF 5% 50V
C335-339	1-163-033-91	s	CERAMIC, CHIP 0.022uF 50V
C340	1-126-933-11	s	ELECT 100uF 20% 16V
C341	1-163-033-91	s	CERAMIC, CHIP 0.022uF 50V
C342	1-163-033-91	s	CERAMIC, CHIP 0.022uF 50V

(VP-44A BOARD(for UVW-1200, NTSC))

Ref. No. or Q'ty	Part No.	SP	Description	
C343	1-126-933-11	s	ELECT 100uF 20% 16V	
C344	1-163-033-91	s	CERAMIC, CHIP 0.022uF 50V	
C345	1-163-033-91	s	CERAMIC, CHIP 0.022uF 50V	
C346	1-163-231-11	s	CERAMIC, CHIP 15pF 5% 50V	
C347	1-126-933-11	s	ELECT 100uF 20% 16V	
C348	1-126-933-11	s	ELECT 100uF 20% 16V	
C349	1-163-241-11	s	CERAMIC, CHIP 39pF 5% 50V	
C350	1-163-033-91	s	CERAMIC, CHIP 0.022uF 50V	
C351	1-126-933-11	s	ELECT 100uF 20% 16V	
C401-408	1-163-033-91	s	CERAMIC, CHIP 0.022uF 50V	
C409	1-126-925-11	s	ELECT 470uF 20% 10V	
C410	1-163-033-91	s	CERAMIC, CHIP 0.022uF 50V	
C411	1-163-033-91	s	CERAMIC, CHIP 0.022uF 50V	
C412	1-163-222-11	s	CERAMIC, CHIP 5pF 50V	
C413	1-163-222-11	s	CERAMIC, CHIP 5pF 50V	
C414	1-163-033-91	s	CERAMIC, CHIP 0.022uF 50V	
C415	1-164-161-11	s	CERAMIC, CHIP 0.0022uF 10% 100V	
C416	1-163-222-11	s	CERAMIC, CHIP 5pF 50V	
C417	1-163-033-91	s	CERAMIC, CHIP 0.022uF 50V	
C418	1-163-033-91	s	CERAMIC, CHIP 0.022uF 50V	
C419	1-126-925-11	s	ELECT 470uF 20% 10V	
C420	1-126-925-11	s	ELECT 470uF 20% 10V	
C421-425	1-163-033-91	s	CERAMIC, CHIP 0.022uF 50V	
C426	1-126-933-11	s	ELECT 100uF 20% 16V	
C427	1-126-925-11	s	ELECT 470uF 20% 10V	
C428	1-163-033-91	s	CERAMIC, CHIP 0.022uF 50V	
C429	1-163-084-00	s	CERAMIC, CHIP 1.5pF 50V	
C430	1-107-552-11	s	MICA, CHIP 150pF 1% 50V	
C431	1-163-033-91	s	CERAMIC, CHIP 0.022uF 50V	
C432	1-126-963-11	s	ELECT 4.7uF 20% 50V	
C433	1-163-239-11	s	CERAMIC, CHIP 33pF 5% 50V	
C434	1-163-033-91	s	CERAMIC, CHIP 0.022uF 50V	
C435	1-163-033-91	s	CERAMIC, CHIP 0.022uF 50V	
C436	1-163-251-11	s	CERAMIC, CHIP 100pF 5% 50V	
C437	1-126-925-11	s	ELECT 470uF 20% 10V	
C438	1-126-933-11	s	ELECT 100uF 20% 16V	
C439	1-163-033-91	s	CERAMIC, CHIP 0.022uF 50V	
C440	1-163-033-91	s	CERAMIC, CHIP 0.022uF 50V	
C441	1-163-033-91	s	CERAMIC, CHIP 0.022uF 50V	
C442	1-126-933-11	s	ELECT 100uF 20% 16V	
C443	1-126-933-11	s	ELECT 100uF 20% 16V	
*C501	1-163-033-91	s	CERAMIC, CHIP 0.022uF 50V	*8
C502	1-163-033-91	s	CERAMIC, CHIP 0.022uF 50V	
C503	1-126-933-11	s	ELECT 100uF 20% 16V	
C504	1-126-933-11	s	ELECT 100uF 20% 16V	
C505	1-163-033-91	s	CERAMIC, CHIP 0.022uF 50V	
C506	1-163-033-91	s	CERAMIC, CHIP 0.022uF 50V	
C507	1-163-033-91	s	CERAMIC, CHIP 0.022uF 50V	
C508	1-163-033-91	s	CERAMIC, CHIP 0.022uF 50V	
C509	1-163-227-11	s	CERAMIC, CHIP 10pF 5% 50V	
C510	1-163-251-11	s	CERAMIC, CHIP 100pF 5% 50V	
C511	1-163-251-11	s	CERAMIC, CHIP 100pF 5% 50V	
C512	1-131-353-00	s	TANTALUM 10uF 10% 35V	
C513	1-131-353-00	s	TANTALUM 10uF 10% 35V	
C514	1-163-033-91	s	CERAMIC, CHIP 0.022uF 50V	
C515	1-130-491-00	s	MYLAR 0.047uF 5% 50V	
C516	1-163-033-91	s	CERAMIC, CHIP 0.022uF 50V	
C517	1-163-033-91	s	CERAMIC, CHIP 0.022uF 50V	
C518	1-163-227-11	s	CERAMIC, CHIP 10pF 5% 50V	

Note: In this list * marked parts are design changed.
Refer to pages 18-29 to 18-31 for applicable serial numbers.

(VP-44A BOARD(for UVW-1200, NTSC))

Ref. No. or Q'ty	Part No.	SP	Description
C519	1-163-235-11	s	CERAMIC, CHIP 22pF 5% 50V
C520-526	1-163-033-91	s	CERAMIC, CHIP 0.022uF 50V
C527	1-126-933-11	s	ELECT 100uF 20% 16V
C528	1-163-033-91	s	CERAMIC, CHIP 0.022uF 50V
C529	1-163-033-91	s	CERAMIC, CHIP 0.022uF 50V
C530	1-163-033-91	s	CERAMIC, CHIP 0.022uF 50V
C531	1-163-224-11	s	CERAMIC, CHIP 7pF 50V
C532	1-131-353-00	s	TANTALUM 10uF 10% 35V
C533	1-131-353-00	s	TANTALUM 10uF 10% 35V
C534	1-126-933-11	s	ELECT 100uF 20% 16V
C535	1-163-033-91	s	CERAMIC, CHIP 0.022uF 50V
C536	1-163-033-91	s	CERAMIC, CHIP 0.022uF 50V
C537	1-130-491-00	s	MYLAR 0.047uF 5% 50V
C538	1-163-033-91	s	CERAMIC, CHIP 0.022uF 50V
C539	1-163-227-11	s	CERAMIC, CHIP 10pF 5% 50V
C540	1-163-033-91	s	CERAMIC, CHIP 0.022uF 50V
C541	1-163-243-11	s	CERAMIC, CHIP 47pF 5% 50V
C542	1-163-033-91	s	CERAMIC, CHIP 0.022uF 50V
C543	1-163-033-91	s	CERAMIC, CHIP 0.022uF 50V
C544	1-163-033-91	s	CERAMIC, CHIP 0.022uF 50V
C545	1-163-033-91	s	CERAMIC, CHIP 0.022uF 50V
C546	1-163-227-11	s	CERAMIC, CHIP 10pF 5% 50V
C547	1-163-243-11	s	CERAMIC, CHIP 47pF 5% 50V
C548	1-163-033-91	s	CERAMIC, CHIP 0.022uF 50V
C549	1-163-033-91	s	CERAMIC, CHIP 0.022uF 50V
C550	1-163-033-91	s	CERAMIC, CHIP 0.022uF 50V
C551	1-163-222-11	s	CERAMIC, CHIP 5pF 50V
C552-556	1-163-033-91	s	CERAMIC, CHIP 0.022uF 50V
C557	1-126-925-11	s	ELECT 470uF 20% 10V
C558	1-126-925-11	s	ELECT 470uF 20% 10V
C559	1-163-033-91	s	CERAMIC, CHIP 0.022uF 50V
C560	1-163-033-91	s	CERAMIC, CHIP 0.022uF 50V
C561	1-126-933-11	s	ELECT 100uF 20% 16V
C562	1-126-933-11	s	ELECT 100uF 20% 16V
C563	1-126-933-11	s	ELECT 100uF 20% 16V
C601	1-126-933-11	s	ELECT 100uF 20% 16V
C602	1-126-933-11	s	ELECT 100uF 20% 16V
C603-608	1-163-033-91	s	CERAMIC, CHIP 0.022uF 50V
C609	1-126-933-11	s	ELECT 100uF 20% 16V
C610	1-126-933-11	s	ELECT 100uF 20% 16V
C613	1-163-033-91	s	CERAMIC, CHIP 0.022uF 50V
C614	1-163-033-91	s	CERAMIC, CHIP 0.022uF 50V
C615	1-126-933-11	s	ELECT 100uF 20% 16V
C616	1-126-933-11	s	ELECT 100uF 20% 16V
C617	1-163-033-91	s	CERAMIC, CHIP 0.022uF 50V
C618	1-163-033-91	s	CERAMIC, CHIP 0.022uF 50V
C619	1-131-347-00	s	TANTALUM 1uF 10% 35V
C620	1-131-347-00	s	TANTALUM 1uF 10% 35V
C621	1-131-347-00	s	TANTALUM 1uF 10% 35V
C622	1-131-347-00	s	TANTALUM 1uF 10% 35V
C623	1-163-033-91	s	CERAMIC, CHIP 0.022uF 50V
C624	1-163-033-91	s	CERAMIC, CHIP 0.022uF 50V
C625	1-163-033-91	s	CERAMIC, CHIP 0.022uF 50V
C626	1-130-491-00	s	MYLAR 0.047uF 5% 50V
C627	1-130-491-00	s	MYLAR 0.047uF 5% 50V
C628	1-163-033-91	s	CERAMIC, CHIP 0.022uF 50V
C629	1-163-227-11	s	CERAMIC, CHIP 10pF 5% 50V
C630	1-163-033-91	s	CERAMIC, CHIP 0.022uF 50V
C632-639	1-163-033-91	s	CERAMIC. CHIP 0.022uF 50V

(VP-44A BOARD(for UVW-1200, NTSC))

Ref. No. or Q'ty	Part No.	SP	Description	
C640	1-126-933-11	s	ELECT 100uF 20% 16V	
C641	1-163-033-91	s	CERAMIC, CHIP 0.022uF 50V	
C643	1-163-243-11	s	CERAMIC, CHIP 47pF 5% 50V	
C644	1-163-227-11	s	CERAMIC, CHIP 10pF 5% 50V	
C645	1-163-033-91	s	CERAMIC, CHIP 0.022uF 50V	
C646	1-163-033-91	s	CERAMIC, CHIP 0.022uF 50V	
C647	1-163-224-11	s	CERAMIC, CHIP 7pF 50V	
C649	1-163-033-91	s	CERAMIC, CHIP 0.022uF 50V	
C650	1-163-033-91	s	CERAMIC, CHIP 0.022uF 50V	
C651	1-163-033-91	s	CERAMIC, CHIP 0.022uF 50V	
C652	1-163-033-91	s	CERAMIC, CHIP 0.022uF 50V	
C653	1-126-933-11	s	ELECT 100uF 20% 16V	
C654	1-163-227-11	s	CERAMIC, CHIP 10pF 5% 50V	
C701	1-126-933-11	s	ELECT 100uF 20% 16V	
C702	1-126-933-11	s	ELECT 100uF 20% 16V	
C703	1-163-033-91	s	CERAMIC, CHIP 0.022uF 50V	
C704	1-163-033-91	s	CERAMIC, CHIP 0.022uF 50V	
C705	1-163-231-11	s	CERAMIC, CHIP 15pF 5% 50V	
C706	1-163-231-11	s	CERAMIC, CHIP 15pF 5% 50V	
C707	1-163-243-11	s	CERAMIC, CHIP 47pF 5% 50V	
C708	1-163-243-11	s	CERAMIC, CHIP 47pF 5% 50V	
C709	1-163-227-11	s	CERAMIC, CHIP 10pF 5% 50V	
C710	1-163-227-11	s	CERAMIC, CHIP 10pF 5% 50V	
C711	1-163-235-11	s	CERAMIC, CHIP 22pF 5% 50V	
C712	1-163-235-11	s	CERAMIC, CHIP 22pF 5% 50V	
C713-725	1-163-033-91	s	CERAMIC, CHIP 0.022uF 50V	
C726-730	1-126-933-11	s	ELECT 100uF 20% 16V	
C731	1-131-353-00	s	TANTALUM 10uF 10% 35V	
C732	1-163-033-91	s	CERAMIC, CHIP 0.022uF 50V	
C733	1-163-033-91	s	CERAMIC, CHIP 0.022uF 50V	
C734	1-163-033-91	s	CERAMIC, CHIP 0.022uF 50V	
C735	1-163-033-91	s	CERAMIC, CHIP 0.022uF 50V	
C736	1-130-487-00	s	MYLAR 0.022uF 5% 50V	
C737	1-163-033-91	s	CERAMIC, CHIP 0.022uF 50V	
C738	1-163-033-91	s	CERAMIC, CHIP 0.022uF 50V	
C739	1-163-033-91	s	CERAMIC, CHIP 0.022uF 50V	
C740	1-126-933-11	s	ELECT 100uF 20% 16V	
C741	1-126-933-11	s	ELECT 100uF 20% 16V	
CN103	1-573-782-21	o	CONNECTOR, PHEC 60P, MALE	
*CN104	1-573-782-21	o	CONNECTOR, PHEC 60P, MALE	*9
CN105	1-506-491-11	s	CONNECTOR 12P, MALE	
*CN601	1-573-782-21	o	CONNECTOR, PHEC 60P, MALE	*8
D201	8-719-123-82	s	DIODE 1SS303-T1	
D401	8-719-123-82	s	DIODE 1SS303-T1	
D501	8-719-123-82	s	DIODE 1SS303-T1	
D502	8-719-941-04	s	DIODE SB007-03CP	
D503	8-719-021-31	s	DIODE UZM5.1B	
D504	8-719-123-82	s	DIODE 1SS303-T1	
D601	8-719-941-04	s	DIODE SB007-03CP	
D701	8-719-123-82	s	DIODE 1SS303-T1	
DL101	1-415-154-00	s	DELAY LINE 35nS	
DL301	1-415-546-11	s	DELAY LINE 50nS	
FL201	1-239-770-11	s	FILTER, LOW-PASS 4MHz	
FL401	1-239-772-11	s	FILTER, LOW-PASS 3MHz	
FL601	1-239-771-11	s	FILTER, LOW-PASS 6MHz	
IC101	8-752-052-75	s	IC CXA1479Q	
IC102	8-759-300-71	s	IC HD14053BFP	

Note: In this list * marked parts are design changed.
Refer to pages 18-29 to 18-31 for applicable serial numbers.

(VP-44A BOARD(for UVW-1200, NTSC))

Ref. No. or Q'ty	Part No.	SP	Description	
IC103	8-759-908-92	s	IC TL084CNS	
IC104	8-759-702-08	s	IC NJM360M	
IC202	8-752-052-48	s	IC CXA1370Q	
IC203	8-759-700-65	s	IC NJM79L05A	
IC204	1-810-333-11	s	HIC BP-022	
IC205	8-759-189-43	s	IC AN77L05-TA	
IC301	8-752-052-75	s	IC CXA1479Q	
IC302	8-759-300-71	s	IC HD14053BFP	
IC303	8-759-908-92	s	IC TL084CNS	
IC401	8-752-052-48	s	IC CXA1370Q	
IC402	8-759-700-65	s	IC NJM79L05A	
IC403	1-810-333-11	s	HIC BP-022	
IC404	8-759-189-43	s	IC AN77L05-TA	
IC501	8-759-907-81	s	IC SN74LS221NS	
IC502	8-759-908-92	s	IC TL084CNS	
IC504	8-759-168-20	s	IC TA78L09S	
IC505	8-759-700-65	s	IC NJM79L05A	
IC506	8-759-908-92	s	IC TL084CNS	
IC507	8-752-052-73	s	IC CXA1451M	
IC508	8-752-052-73	s	IC CXA1451M	
IC509	8-752-052-73	s	IC CXA1451M	
IC510	8-752-052-73	s	IC CXA1451M	
IC511	8-759-927-46	s	IC SN74HC00ANS	
IC512	8-759-182-84	s	IC PQ05SZ5U	
IC513	8-759-822-95	s	IC L79M05T-FA	
IC514	8-759-300-71	s	IC HD14053BFP	
*IC515	8-759-189-43	s	IC AN77L05-TA	*8
	8-759-300-71	s	IC HD14053BFP	*9
IC516	8-759-700-65	s	IC NJM79L05A	
IC601	8-759-981-48	s	IC NJM082M	
IC602	8-759-908-92	s	IC TL084CNS	
IC603	8-759-300-71	s	IC HD14053BFP	
IC604	8-759-908-92	s	IC TL084CNS	
IC605	8-752-054-80	s	IC CXA1521M	
IC606	8-752-054-80	s	IC CXA1521M	
IC607	8-759-168-20	s	IC TA78L09S	
IC608	8-759-906-59	s	IC CX22017	
IC610	8-759-700-65	s	IC NJM79L05A	
IC612	8-752-052-73	s	IC CXA1451M	
IC613	8-759-262-00	s	IC MC14576CF	
IC701	8-752-052-73	s	IC CXA1451M	
IC702	8-752-052-73	s	IC CXA1451M	
IC703	8-759-927-46	s	IC SN74HC00ANS	
IC704	8-759-925-74	s	IC TC74HC04ANS	
IC705	8-759-925-85	s	IC SN74HC32ANS	
IC706	8-759-189-43	s	IC AN77L05-TA	
IC707	8-759-700-65	s	IC NJM79L05A	
IC708	8-759-168-20	s	IC TA78L09S	
L101	1-410-482-31	s	INDUCTOR 100uH	
L102	1-408-406-00	s	INDUCTOR 5.6uH	
L103	1-408-406-00	s	INDUCTOR 5.6uH	
L104	1-410-466-41	s	INDUCTOR 4.7uH	
L105	1-410-482-31	s	INDUCTOR 100uH	
L106	1-410-462-11	s	INDUCTOR 2.2uH	
L107	1-410-482-31	s	INDUCTOR 100uH	
L108	1-410-482-31	s	INDUCTOR 100uH	
L109	1-408-621-31	s	INDUCTOR 330uH	
L110	1-410-482-31	s	INDUCTOR 100uH	

(VP-44A BOARD(for UVW-1200, NTSC))

Ref. No. or Q'ty	Part No.	SP	Description	
L201	1-410-471-11	s	INDUCTOR 12uH	
L202	1-410-482-31	s	INDUCTOR 100uH	
L203	1-410-468-11	s	INDUCTOR 6.8uH	
L204	1-410-478-11	s	INDUCTOR 47uH	
L205	1-410-482-31	s	INDUCTOR 100uH	
L206	1-410-482-31	s	INDUCTOR 100uH	
L207	1-410-482-31	s	INDUCTOR 100uH	
L301	1-410-482-31	s	INDUCTOR 100uH	
L302	1-410-468-11	s	INDUCTOR 6.8uH	
L303	1-410-468-11	s	INDUCTOR 6.8uH	
L304	1-408-429-00	s	INDUCTOR 470uH	
L305	1-408-429-00	s	INDUCTOR 470uH	
L306	1-408-406-00	s	INDUCTOR 5.6uH	
L307	1-410-482-31	s	INDUCTOR 100uH	
L308	1-410-462-11	s	INDUCTOR 2.2uH	
L309	1-408-621-31	s	INDUCTOR 330uH	
L310	1-410-482-31	s	INDUCTOR 100uH	
L311	1-410-482-31	s	INDUCTOR 100uH	
L312	1-410-482-31	s	INDUCTOR 100uH	
L401	1-410-471-11	s	INDUCTOR 12uH	
L402	1-410-482-31	s	INDUCTOR 100uH	
L403	1-408-408-00	s	INDUCTOR 8.2uH	
L404	1-410-482-31	s	INDUCTOR 100uH	
L405	1-410-482-31	s	INDUCTOR 100uH	
L406	1-410-482-31	s	INDUCTOR 100uH	
L501	1-410-482-31	s	INDUCTOR 100uH	
L503	1-410-482-31	s	INDUCTOR 100uH	
L504	1-410-482-31	s	INDUCTOR 100uH	
L505	1-410-478-11	s	INDUCTOR 47uH	
L506	1-410-476-11	s	INDUCTOR 33uH	
*L507	1-410-482-31	s	INDUCTOR 100uH	*9
L601-606	1-410-482-31	s	INDUCTOR 100uH	
L607	1-408-413-00	s	INDUCTOR 22uH	
L702	1-410-482-31	s	INDUCTOR 100uH	
L703	1-410-476-11	s	INDUCTOR 33uH	
L704	1-410-476-11	s	INDUCTOR 33uH	
L706-710	1-412-533-21	s	INDUCTOR 47uH	
*Q51	8-729-904-41	s	TRANSISTOR FMY3	*44
Q101	8-729-117-32	s	TRANSISTOR 2SC4177	
Q102	8-729-117-72	s	TRANSISTOR 2SC4178	
Q103	8-729-143-07	s	TRANSISTOR 2SA1610-YY33	
Q104	8-729-117-72	s	TRANSISTOR 2SC4178	
Q105	8-729-117-72	s	TRANSISTOR 2SC4178	
Q106	8-729-143-07	s	TRANSISTOR 2SA1610-YY33	
Q107-111	8-729-117-72	s	TRANSISTOR 2SC4178	
Q112	8-729-905-18	s	TRANSISTOR DTC144EU	
Q201	8-729-117-72	s	TRANSISTOR 2SC4178	
Q202	8-729-143-07	s	TRANSISTOR 2SA1610-YY33	
Q203	8-729-117-72	s	TRANSISTOR 2SC4178	
Q204	8-729-117-72	s	TRANSISTOR 2SC4178	
Q206	8-729-143-07	s	TRANSISTOR 2SA1610-YY33	
Q207	8-729-117-72	s	TRANSISTOR 2SC4178	
Q208	8-729-143-07	s	TRANSISTOR 2SA1610-YY33	
Q209	8-729-143-07	s	TRANSISTOR 2SA1610-YY33	
Q210	8-729-117-72	s	TRANSISTOR 2SC4178	
Q212	8-729-117-72	s	TRANSISTOR 2SC4178	
Q215	8-729-117-72	s	TRANSISTOR 2SC4178	
Q216	8-729-905-12	s	TRANSISTOR DTA144EU	

Note: In this list * marked parts are design changed.
Refer to pages 18-29 to 18-31 for applicable serial numbers.

(VP-44A BOARD(for UVW-1200, NTSC))

Ref. No. or Q'ty	Part No.	SP	Description
Q217	8-729-117-72	s	TRANSISTOR 2SC4178
Q218	8-729-143-07	s	TRANSISTOR 2SA1610-YY33
Q219	8-729-117-72	s	TRANSISTOR 2SC4178
Q220	8-729-143-07	s	TRANSISTOR 2SA1610-YY33
Q301	8-729-117-32	s	TRANSISTOR 2SC4177
Q302	8-729-117-72	s	TRANSISTOR 2SC4178
Q303	8-729-117-72	s	TRANSISTOR 2SC4178
Q304	8-729-143-07	s	TRANSISTOR 2SA1610-YY33
Q305	8-729-117-72	s	TRANSISTOR 2SC4178
Q306	8-729-143-07	s	TRANSISTOR 2SA1610-YY33
Q307-311	8-729-117-72	s	TRANSISTOR 2SC4178
Q401	8-729-117-72	s	TRANSISTOR 2SC4178
Q402	8-729-143-07	s	TRANSISTOR 2SA1610-YY33
Q403	8-729-117-72	s	TRANSISTOR 2SC4178
Q404	8-729-117-72	s	TRANSISTOR 2SC4178
Q405	8-729-143-07	s	TRANSISTOR 2SA1610-YY33
Q406	8-729-143-07	s	TRANSISTOR 2SA1610-YY33
Q407	8-729-117-72	s	TRANSISTOR 2SC4178
Q408	8-729-117-72	s	TRANSISTOR 2SC4178
Q409	8-729-117-72	s	TRANSISTOR 2SC4178
Q410	8-729-117-72	s	TRANSISTOR 2SC4178
Q411	8-729-143-07	s	TRANSISTOR 2SA1610-YY33
Q416	8-729-905-12	s	TRANSISTOR DTA144EU
Q417	8-729-117-72	s	TRANSISTOR 2SC4178
Q418	8-729-143-07	s	TRANSISTOR 2SA1610-YY33
Q501	8-729-117-32	s	TRANSISTOR 2SC4177
Q502	8-729-923-06	s	TRANSISTOR FMW8
Q503	8-729-904-04	s	TRANSISTOR FMS2
Q504	8-729-903-82	s	TRANSISTOR FMW2
Q505	8-729-931-46	s	TRANSISTOR FMW7
Q506	8-729-907-26	s	TRANSISTOR IMX1
Q507	8-729-904-41	s	TRANSISTOR FMY3
Q508	8-729-117-32	s	TRANSISTOR 2SC4177
Q509	8-729-117-32	s	TRANSISTOR 2SC4177
Q510	8-729-117-32	s	TRANSISTOR 2SC4177
Q511	8-729-907-26	s	TRANSISTOR IMX1
Q512	8-729-117-32	s	TRANSISTOR 2SC4177
Q513	8-729-117-32	s	TRANSISTOR 2SC4177
Q514	8-729-117-32	s	TRANSISTOR 2SC4177
Q515	8-729-907-26	s	TRANSISTOR IMX1
Q516	8-729-117-32	s	TRANSISTOR 2SC4177
Q517	8-729-117-32	s	TRANSISTOR 2SC4177
Q518	8-729-140-63	s	TRANSISTOR 2SA1611-M5M6
Q519	8-729-143-14	s	TRANSISTOR 2SC4176-B35
Q520	8-729-117-32	s	TRANSISTOR 2SC4177
Q521	8-729-904-41	s	TRANSISTOR FMY3
Q522	8-729-904-41	s	TRANSISTOR FMY3
Q523	8-729-904-41	s	TRANSISTOR FMY3
Q601	8-729-117-32	s	TRANSISTOR 2SC4177
Q602	8-729-117-32	s	TRANSISTOR 2SC4177
Q603	8-729-923-06	s	TRANSISTOR FMW8
Q604	8-729-923-06	s	TRANSISTOR FMW8
Q605	8-729-904-04	s	TRANSISTOR FMS2
Q606	8-729-904-04	s	TRANSISTOR FMS2
Q607	8-729-903-82	s	TRANSISTOR FMW2
Q608	8-729-903-82	s	TRANSISTOR FMW2
Q609	8-729-907-26	s	TRANSISTOR IMX1
Q610	8-729-907-26	s	TRANSISTOR IMX1
Q611	8-729-931-46	s	TRANSISTOR FMW7

(VP-44A BOARD(for UVW-1200, NTSC))

Ref. No. or Q'ty	Part No.	SP	Description	
Q612	8-729-931-46	s	TRANSISTOR FMW7	
Q613	8-729-140-63	s	TRANSISTOR 2SA1611-M5M6	
Q615-622	8-729-117-32	s	TRANSISTOR 2SC4177	
Q623	8-729-143-14	s	TRANSISTOR 2SC4176-B35	
Q624	8-729-117-32	s	TRANSISTOR 2SC4177	
Q701	8-729-117-32	s	TRANSISTOR 2SC4177	
Q702	8-729-117-32	s	TRANSISTOR 2SC4177	
Q703	8-729-140-63	s	TRANSISTOR 2SA1611-M5M6	
Q704	8-729-140-63	s	TRANSISTOR 2SA1611-M5M6	
Q705	8-729-117-32	s	TRANSISTOR 2SC4177	
Q706	8-729-117-32	s	TRANSISTOR 2SC4177	
Q707	8-729-117-32	s	TRANSISTOR 2SC4177	
Q708	8-729-117-32	s	TRANSISTOR 2SC4177	
Q709	8-729-422-44	s	TRANSISTOR 2SK663	
Q710	8-729-422-44	s	TRANSISTOR 2SK663	
Q711	8-729-422-44	s	TRANSISTOR 2SK663	
Q712	8-729-422-44	s	TRANSISTOR 2SK663	
Q713	8-729-140-63	s	TRANSISTOR 2SA1611-M5M6	
Q714	8-729-140-63	s	TRANSISTOR 2SA1611-M5M6	
Q715	8-729-140-63	s	TRANSISTOR 2SA1611-M5M6	
Q716	8-729-140-63	s	TRANSISTOR 2SA1611-M5M6	
Q717	8-729-117-32	s	TRANSISTOR 2SC4177	
Q718	8-729-907-26	s	TRANSISTOR IMX1	
Q719	8-729-907-26	s	TRANSISTOR IMX1	
Q720	8-729-117-32	s	TRANSISTOR 2SC4177	
Q721	8-729-117-32	s	TRANSISTOR 2SC4177	
Q722	8-729-907-26	s	TRANSISTOR IMX1	
Q723	8-729-907-26	s	TRANSISTOR IMX1	
Q724	8-729-117-32	s	TRANSISTOR 2SC4177	
Q725	8-729-117-32	s	TRANSISTOR 2SC4177	
Q726	8-729-140-63	s	TRANSISTOR 2SA1611-M5M6	
Q727	8-729-140-63	s	TRANSISTOR 2SA1611-M5M6	
*R51	1-216-097-91	s	METAL, CHIP 100k 5% 1/10W	*9
*R52	1-216-073-00	s	METAL, CHIP 10k 5% 1/10W	*9
*R53	1-216-057-00	s	METAL, CHIP 2.2k 5% 1/10W	*44
*R54	1-216-025-91	s	METAL, CHIP 100 5% 1/10W	*44
*R55	1-216-057-00	s	METAL, CHIP 2.2k 5% 1/10W	*44
*R56	1-216-041-00	s	METAL, CHIP 470 5% 1/10W	*44
*R57	1-216-041-00	s	METAL, CHIP 470 5% 1/10W	*9
*R58	1-216-049-91	s	METAL, CHIP 1k 5% 1/10W	*9
R101	1-216-627-11	s	METAL, CHIP 100 0.5% 1/10W	
R102	1-216-627-11	s	METAL, CHIP 100 0.5% 1/10W	
R103	1-216-634-11	s	METAL, CHIP 200 0.5% 1/10W	
R104	1-216-634-11	s	METAL, CHIP 200 0.5% 1/10W	
R105	1-216-025-91	s	METAL, CHIP 100 5% 1/10W	
R106	1-216-057-00	s	METAL, CHIP 2.2k 5% 1/10W	
R107	1-216-295-91	s	RES, CHIP 0	
R108	1-216-025-91	s	METAL, CHIP 100 5% 1/10W	
R109	1-216-025-91	s	METAL, CHIP 100 5% 1/10W	
R110	1-216-049-91	s	METAL, CHIP 1k 5% 1/10W	
R111	1-216-025-91	s	METAL, CHIP 100 5% 1/10W	
R112	1-216-065-00	s	METAL, CHIP 4.7k 5% 1/10W	
R113	1-216-025-91	s	METAL, CHIP 100 5% 1/10W	
R114	1-216-057-00	s	METAL, CHIP 2.2k 5% 1/10W	
R115	1-216-025-91	s	METAL, CHIP 100 5% 1/10W	
R116	1-216-073-00	s	METAL, CHIP 10k 5% 1/10W	
R117	1-216-073-00	s	METAL, CHIP 10k 5% 1/10W	
R118	1-216-025-91	s	METAL, CHIP 100 5% 1/10W	

Note: In this list * marked parts are design changed.
Refer to pages 18-29 to 18-31 for applicable serial numbers.

(VP-44A BOARD(for UVW-1200, NTSC))

Ref. No. or Q'ty	Part No.	SP	Description	
R119	1-216-057-00	s	METAL, CHIP 2.2k 5% 1/10W	
R120	1-216-638-11	s	METAL, CHIP 300 0.5% 1/10W	
R121	1-216-065-00	s	METAL, CHIP 4.7k 5% 1/10W	
R122	1-216-638-11	s	METAL, CHIP 300 0.5% 1/10W	
R123	1-216-025-91	s	METAL, CHIP 100 5% 1/10W	
R124	1-216-049-91	s	METAL, CHIP 1k 5% 1/10W	
R125	1-216-065-00	s	METAL, CHIP 4.7k 5% 1/10W	
R126	1-216-049-91	s	METAL, CHIP 1k 5% 1/10W	
R127	1-216-073-00	s	METAL, CHIP 10k 5% 1/10W	
R128	1-216-097-91	s	METAL, CHIP 100k 5% 1/10W	
R129	1-216-025-91	s	METAL, CHIP 100 5% 1/10W	
R130	1-216-025-91	s	METAL, CHIP 100 5% 1/10W	
R131	1-208-775-11	s	METAL, CHIP 510 0.5% 1/10W	
R132	1-208-774-11	s	METAL, CHIP 470 5% 1/10W	
R133	1-216-041-00	s	METAL, CHIP 470 5% 1/10W	
R134	1-208-774-11	s	METAL, CHIP 470 5% 1/10W	
R135	1-216-025-91	s	METAL, CHIP 100 5% 1/10W	
R136	1-208-822-11	s	METAL, CHIP 47k 0.5% 1/10W	
R137	1-216-659-11	s	METAL, CHIP 2.2k 0.5% 1/10W	
R138	1-216-065-00	s	METAL, CHIP 4.7k 5% 1/10W	
R139	1-216-073-00	s	METAL, CHIP 10k 5% 1/10W	
R140	1-216-025-91	s	METAL, CHIP 100 5% 1/10W	
R141	1-216-073-00	s	METAL, CHIP 10k 5% 1/10W	
R142	1-216-081-00	s	METAL, CHIP 22k 5% 1/10W	
R143	1-216-041-00	s	METAL, CHIP 470 5% 1/10W	
R144	1-216-635-11	s	METAL, CHIP 220 0.5% 1/10W	
R145	1-216-037-00	s	METAL, CHIP 330 5% 1/10W	
R146	1-216-037-00	s	METAL, CHIP 330 5% 1/10W	
R147	1-216-065-00	s	METAL, CHIP 4.7k 5% 1/10W	
R148	1-216-065-00	s	METAL, CHIP 4.7k 5% 1/10W	
R149	1-216-651-11	s	METAL, CHIP 1k 0.5% 1/10W	
*R150	1-216-671-11	s	METAL, CHIP 6.8k 0.5% 1/10W	*22
	1-216-667-11	s	METAL, CHIP 4.7k 0.5% 1/10W	*23
R151	1-216-025-91	s	METAL, CHIP 100 5% 1/10W	
R152	1-216-057-00	s	METAL, CHIP 2.2k 5% 1/10W	
R153	1-216-057-00	s	METAL, CHIP 2.2k 5% 1/10W	
R154	1-216-037-00	s	METAL, CHIP 330 5% 1/10W	
R155	1-216-041-00	s	METAL, CHIP 470 5% 1/10W	
R156	1-216-035-00	s	METAL, CHIP 270 5% 1/10W	
R157	1-216-037-00	s	METAL, CHIP 330 5% 1/10W	
R158	1-216-065-00	s	METAL, CHIP 4.7k 5% 1/10W	
R159	1-216-077-00	s	METAL, CHIP 15k 5% 1/10W	
R160	1-216-085-00	s	METAL, CHIP 33k 5% 1/10W	
R161	1-216-073-00	s	METAL, CHIP 10k 5% 1/10W	
R162	1-216-073-00	s	METAL, CHIP 10k 5% 1/10W	
R163	1-208-806-11	s	METAL, CHIP 10k 0.5% 1/10W	
R164	1-216-661-11	s	METAL, CHIP 2.7k 0.5% 1/10W	
R165	1-216-065-00	s	METAL, CHIP 4.7k 5% 1/10W	
R166	1-216-037-00	s	METAL, CHIP 330 5% 1/10W	
R168	1-216-295-91	s	RES, CHIP 0	
R169	1-216-295-91	s	RES, CHIP 0	
R170	1-216-663-11	s	METAL, CHIP 3.3k 0.5% 1/10W	
R202	1-208-806-11	s	METAL, CHIP 10k 0.5% 1/10W	
R203	1-208-806-11	s	METAL, CHIP 10k 0.5% 1/10W	
R206	1-216-049-91	s	METAL, CHIP 1k 5% 1/10W	
R207	1-216-025-91	s	METAL, CHIP 100 5% 1/10W	
R208	1-216-025-91	s	METAL, CHIP 100 5% 1/10W	
R209	1-216-639-11	s	METAL, CHIP 330 0.5% 1/10W	

(VP-44A BOARD(for UVW-1200, NTSC))

Ref. No. or Q'ty	Part No.	SP	Description
R210	1-216-057-00	s	METAL, CHIP 2.2k 5% 1/10W
R211	1-216-651-11	s	METAL, CHIP 1k 0.5% 1/10W
R212	1-216-025-91	s	METAL, CHIP 100 5% 1/10W
R213	1-216-639-11	s	METAL, CHIP 330 0.5% 1/10W
R214	1-216-065-00	s	METAL, CHIP 4.7k 5% 1/10W
R215	1-216-651-11	s	METAL, CHIP 1k 0.5% 1/10W
R216	1-216-673-11	s	METAL, CHIP 8.2k 0.5% 1/10W
R217	1-208-784-11	s	METAL, CHIP 1.2k 0.5% 1/10W
R218	1-216-073-00	s	METAL, CHIP 10k 5% 1/10W
R219	1-216-073-00	s	METAL, CHIP 10k 5% 1/10W
R220	1-216-025-91	s	METAL, CHIP 100 5% 1/10W
R221	1-216-025-91	s	METAL, CHIP 100 5% 1/10W
R222	1-216-065-00	s	METAL, CHIP 4.7k 5% 1/10W
R223	1-216-025-91	s	METAL, CHIP 100 5% 1/10W
R224	1-216-049-91	s	METAL, CHIP 1k 5% 1/10W
R227	1-216-065-00	s	METAL, CHIP 4.7k 5% 1/10W
R228	1-216-025-91	s	METAL, CHIP 100 5% 1/10W
R229	1-216-055-00	s	METAL, CHIP 1.8k 5% 1/10W
R230	1-216-025-91	s	METAL, CHIP 100 5% 1/10W
R232	1-216-025-91	s	METAL, CHIP 100 5% 1/10W
R233	1-216-055-00	s	METAL, CHIP 1.8k 5% 1/10W
R237	1-216-065-00	s	METAL, CHIP 4.7k 5% 1/10W
R240	1-216-655-11	s	METAL, CHIP 1.5k 0.5% 1/10W
R241	1-216-663-11	s	METAL, CHIP 3.3k 0.5% 1/10W
R244	1-216-646-11	s	METAL, CHIP 620 0.5% 1/10W
R245	1-216-673-11	s	METAL, CHIP 8.2k 0.5% 1/10W
R246	1-216-057-00	s	METAL, CHIP 2.2k 5% 1/10W
R247	1-216-667-11	s	METAL, CHIP 4.7k 0.5% 1/10W
R248	1-208-799-11	s	METAL, CHIP 5.1k 0.5% 1/10W
R249	1-216-057-00	s	METAL, CHIP 2.2k 5% 1/10W
R250	1-216-113-00	s	METAL, CHIP 470k 5% 1/10W
R251	1-216-667-11	s	METAL, CHIP 4.7k 0.5% 1/10W
R253	1-208-817-11	s	METAL, CHIP 30k 0.5% 1/10W
R255	1-216-652-11	s	METAL, CHIP 1.1k 0.5% 1/10W
R256	1-216-025-91	s	METAL, CHIP 100 5% 1/10W
R257	1-216-638-11	s	METAL, CHIP 300 0.5% 1/10W
R258	1-216-665-11	s	METAL, CHIP 3.9k 0.5% 1/10W
R259	1-216-671-11	s	METAL, CHIP 6.8k 0.5% 1/10W
R260	1-216-687-11	s	METAL, CHIP 33k 0.5% 1/10W
R262	1-216-685-11	s	METAL, CHIP 27k 0.5% 1/10W
R263	1-216-073-00	s	METAL, CHIP 10k 5% 1/10W
R264	1-216-025-91	s	METAL, CHIP 100 5% 1/10W
R265	1-216-041-00	s	METAL, CHIP 470 5% 1/10W
R266	1-216-638-11	s	METAL, CHIP 300 0.5% 1/10W
R267	1-216-037-00	s	METAL, CHIP 330 5% 1/10W
R268	1-216-057-00	s	METAL, CHIP 2.2k 5% 1/10W
R269	1-216-041-00	s	METAL, CHIP 470 5% 1/10W
R270	1-216-638-11	s	METAL, CHIP 300 0.5% 1/10W
R271	1-216-049-91	s	METAL, CHIP 1k 5% 1/10W
R272	1-208-751-11	s	METAL, CHIP 51 0.5% 1/10W
R273	1-216-037-00	s	METAL, CHIP 330 5% 1/10W
R274	1-216-295-91	s	RES, CHIP 0
R275	1-216-089-91	s	METAL, CHIP 47k 5% 1/10W
R276	1-216-057-00	s	METAL, CHIP 2.2k 5% 1/10W
R278	1-216-025-91	s	METAL, CHIP 100 5% 1/10W
R301	1-216-633-11	s	METAL, CHIP 180 0.5% 1/10W
R302	1-216-633-11	s	METAL, CHIP 180 0.5% 1/10W
R303	1-216-629-11	s	METAL, CHIP 120 0.5% 1/10W
R304	1-216-629-11	s	METAL, CHIP 120 0.5% 1/10W

Note: In this list * marked parts are design changed.
Refer to pages 18-29 to 18-31 for applicable serial numbers.

(VP-44A BOARD(for UVW-1200, NTSC))

Ref. No. or Q'ty	Part No.	SP	Description
R305	1-216-025-91	s	METAL, CHIP 100 5% 1/10W
R306	1-216-049-91	s	METAL, CHIP 1k 5% 1/10W
R307	1-216-025-91	s	METAL, CHIP 100 5% 1/10W
R308	1-216-065-00	s	METAL, CHIP 4.7k 5% 1/10W
R309	1-216-025-91	s	METAL, CHIP 100 5% 1/10W
R310	1-216-025-91	s	METAL, CHIP 100 5% 1/10W
R311	1-216-057-00	s	METAL, CHIP 2.2k 5% 1/10W
R312	1-216-025-91	s	METAL, CHIP 100 5% 1/10W
R313	1-216-057-00	s	METAL, CHIP 2.2k 5% 1/10W
R314	1-216-073-00	s	METAL, CHIP 10k 5% 1/10W
R315	1-216-638-11	s	METAL, CHIP 300 0.5% 1/10W
R316	1-216-073-00	s	METAL, CHIP 10k 5% 1/10W
R317	1-216-025-91	s	METAL, CHIP 100 5% 1/10W
R318	1-216-638-11	s	METAL, CHIP 300 0.5% 1/10W
R319	1-216-065-00	s	METAL, CHIP 4.7k 5% 1/10W
R320	1-216-065-00	s	METAL, CHIP 4.7k 5% 1/10W
R321	1-216-049-91	s	METAL, CHIP 1k 5% 1/10W
R322	1-216-651-11	s	METAL, CHIP 1k 0.5% 1/10W
R323	1-216-049-91	s	METAL, CHIP 1k 5% 1/10W
R324	1-216-025-91	s	METAL, CHIP 100 5% 1/10W
R325	1-208-775-11	s	METAL, CHIP 510 0.5% 1/10W
R326	1-208-774-11	s	METAL, CHIP 470 5% 1/10W
R327	1-216-041-00	s	METAL, CHIP 470 5% 1/10W
R328	1-216-073-00	s	METAL, CHIP 10k 5% 1/10W
R329	1-216-097-91	s	METAL, CHIP 100k 5% 1/10W
R330	1-216-639-11	s	METAL, CHIP 330 0.5% 1/10W
R331	1-216-025-91	s	METAL, CHIP 100 5% 1/10W
R332	1-216-065-00	s	METAL, CHIP 4.7k 5% 1/10W
R333	1-216-073-00	s	METAL, CHIP 10k 5% 1/10W
R334	1-216-025-91	s	METAL, CHIP 100 5% 1/10W
R335	1-216-073-00	s	METAL, CHIP 10k 5% 1/10W
R336	1-216-635-11	s	METAL, CHIP 220 0.5% 1/10W
R337	1-216-041-00	s	METAL, CHIP 470 5% 1/10W
R338	1-216-037-00	s	METAL, CHIP 330 5% 1/10W
R339	1-216-037-00	s	METAL, CHIP 330 5% 1/10W
R340	1-216-065-00	s	METAL, CHIP 4.7k 5% 1/10W
R341	1-216-065-00	s	METAL, CHIP 4.7k 5% 1/10W
R342	1-216-651-11	s	METAL, CHIP 1k 0.5% 1/10W
R343	1-208-784-11	s	METAL, CHIP 1.2k 0.5% 1/10W
R344	1-216-037-00	s	METAL, CHIP 330 5% 1/10W
R345	1-216-041-00	s	METAL, CHIP 470 5% 1/10W
R346	1-216-037-00	s	METAL, CHIP 330 5% 1/10W
R347	1-216-619-11	s	METAL, CHIP 47 0.5% 1/10W
R348	1-216-057-00	s	METAL, CHIP 2.2k 5% 1/10W
R349	1-216-025-91	s	METAL, CHIP 100 5% 1/10W
R350	1-216-065-00	s	METAL, CHIP 4.7k 5% 1/10W
R351	1-216-057-00	s	METAL, CHIP 2.2k 5% 1/10W
R352	1-216-077-00	s	METAL, CHIP 15k 5% 1/10W
R353	1-216-085-00	s	METAL, CHIP 33k 5% 1/10W
R354	1-216-073-00	s	METAL, CHIP 10k 5% 1/10W
R355	1-216-073-00	s	METAL, CHIP 10k 5% 1/10W
R356	1-208-806-11	s	METAL, CHIP 10k 0.5% 1/10W
R357	1-216-661-11	s	METAL, CHIP 2.7k 0.5% 1/10W
R358	1-216-065-00	s	METAL, CHIP 4.7k 5% 1/10W
R359	1-216-037-00	s	METAL, CHIP 330 5% 1/10W
R401	1-216-025-91	s	METAL, CHIP 100 5% 1/10W
R402	1-216-025-91	s	METAL, CHIP 100 5% 1/10W
R403	1-216-639-11	s	METAL, CHIP 330 0.5% 1/10W
R404	1-216-057-00	s	METAL, CHIP 2.2k 5% 1/10W

(VP-44A BOARD(for UVW-1200, NTSC))

Ref. No. or Q'ty	Part No.	SP	Description	
R405	1-216-639-11	s	METAL, CHIP 330 0.5% 1/10W	
R406	1-216-025-91	s	METAL, CHIP 100 5% 1/10W	
R407	1-216-065-00	s	METAL, CHIP 4.7k 5% 1/10W	
R408	1-216-025-91	s	METAL, CHIP 100 5% 1/10W	
R409	1-216-065-00	s	METAL, CHIP 4.7k 5% 1/10W	
R410	1-216-651-11	s	METAL, CHIP 1k 0.5% 1/10W	
R411	1-216-025-91	s	METAL, CHIP 100 5% 1/10W	
R412	1-216-055-00	s	METAL, CHIP 1.8k 5% 1/10W	
R413	1-216-025-91	s	METAL, CHIP 100 5% 1/10W	
R414	1-216-673-11	s	METAL, CHIP 8.2k 0.5% 1/10W	
R415	1-208-774-11	s	METAL, CHIP 470 5% 1/10W	
R416	1-216-025-91	s	METAL, CHIP 100 5% 1/10W	
R417	1-216-055-00	s	METAL, CHIP 1.8k 5% 1/10W	
R418	1-208-784-11	s	METAL, CHIP 1.2k 0.5% 1/10W	
R419	1-216-065-00	s	METAL, CHIP 4.7k 5% 1/10W	
R420	1-216-651-11	s	METAL, CHIP 1k 0.5% 1/10W	
R421	1-216-649-11	s	METAL, CHIP 820 0.5% 1/10W	
R422	1-216-664-11	s	METAL, CHIP 3.6k 0.5% 1/10W	
R423	1-216-073-00	s	METAL, CHIP 10k 5% 1/10W	
R424	1-216-073-00	s	METAL, CHIP 10k 5% 1/10W	
R425	1-216-025-91	s	METAL, CHIP 100 5% 1/10W	
R426	1-208-806-11	s	METAL, CHIP 10k 0.5% 1/10W	
R427	1-216-065-00	s	METAL, CHIP 4.7k 5% 1/10W	
R428	1-216-025-91	s	METAL, CHIP 100 5% 1/10W	
R429	1-216-057-00	s	METAL, CHIP 2.2k 5% 1/10W	
R440	1-216-665-11	s	METAL, CHIP 3.9k 0.5% 1/10W	
R441	1-208-801-11	s	METAL, CHIP 6.2k 0.5% 1/10W	
R442	1-216-057-00	s	METAL, CHIP 2.2k 5% 1/10W	
R443	1-216-113-00	s	METAL, CHIP 470k 5% 1/10W	
R444	1-216-671-11	s	METAL, CHIP 6.8k 0.5% 1/10W	
R445	1-216-119-00	s	METAL, CHIP 820k 5% 1/10W	
R446	1-216-687-11	s	METAL, CHIP 33k 0.5% 1/10W	
R447	1-208-814-11	s	METAL, CHIP 22k 0.5% 1/10W	
R448	1-216-651-11	s	METAL, CHIP 1k 0.5% 1/10W	
R449	1-216-025-91	s	METAL, CHIP 100 5% 1/10W	
R450	1-216-639-11	s	METAL, CHIP 330 0.5% 1/10W	
R451	1-216-665-11	s	METAL, CHIP 3.9k 0.5% 1/10W	
R452	1-216-671-11	s	METAL, CHIP 6.8k 0.5% 1/10W	
R453	1-216-689-11	s	METAL, CHIP 39k 0.5% 1/10W	
R454	1-216-121-91	s	METAL, CHIP 1M 5% 1/10W	
R455	1-216-685-11	s	METAL, CHIP 27k 0.5% 1/10W	
R456	1-216-073-00	s	METAL, CHIP 10k 5% 1/10W	
R457	1-216-025-91	s	METAL, CHIP 100 5% 1/10W	
R458	1-216-041-00	s	METAL, CHIP 470 5% 1/10W	
R459	1-216-638-11	s	METAL, CHIP 300 0.5% 1/10W	
R460	1-216-049-91	s	METAL, CHIP 1k 5% 1/10W	
R461	1-208-751-11	s	METAL, CHIP 51 0.5% 1/10W	
R462	1-216-037-00	s	METAL, CHIP 330 5% 1/10W	
R463	1-216-057-00	s	METAL, CHIP 2.2k 5% 1/10W	
R464	1-216-089-91	s	METAL, CHIP 47k 5% 1/10W	
*R500	1-247-855-11	s	CARBON 10k 5% 1/4W	*8
	1-216-073-00	s	METAL, CHIP 10k 5% 1/10W	*9
R501	1-208-806-11	s	METAL, CHIP 10k 0.5% 1/10W	
R502	1-208-806-11	s	METAL, CHIP 10k 0.5% 1/10W	
R503	1-216-049-91	s	METAL, CHIP 1k 5% 1/10W	
R504	1-216-049-91	s	METAL, CHIP 1k 5% 1/10W	
R505	1-216-089-91	s	METAL, CHIP 47k 5% 1/10W	
R506	1-216-049-91	s	METAL, CHIP 1k 5% 1/10W	

Note: In this list * marked parts are design changed.
Refer to pages 18-29 to 18-31 for applicable serial numbers.

(VP-44A BOARD(for UVW-1200, NTSC))

Ref. No. or Q'ty	Part No.	SP	Description
R507	1-208-806-11	s	METAL, CHIP 10k 0.5% 1/10W
R508	1-216-687-11	s	METAL, CHIP 33k 0.5% 1/10W
R509	1-216-057-00	s	METAL, CHIP 2.2k 5% 1/10W
R510	1-216-049-91	s	METAL, CHIP 1k 5% 1/10W
R511	1-216-121-91	s	METAL, CHIP 1M 5% 1/10W
R512	1-216-049-91	s	METAL, CHIP 1k 5% 1/10W
R513	1-216-049-91	s	METAL, CHIP 1k 5% 1/10W
R514	1-216-033-00	s	METAL, CHIP 220 5% 1/10W
R515	1-216-045-00	s	METAL, CHIP 680 5% 1/10W
R516	1-216-077-00	s	METAL, CHIP 15k 5% 1/10W
R517	1-216-073-00	s	METAL, CHIP 10k 5% 1/10W
R518	1-216-017-91	s	METAL, CHIP 47 5% 1/10W
R519	1-216-027-00	s	METAL, CHIP 120 5% 1/10W
R520	1-216-647-11	s	METAL, CHIP 680 0.5% 1/10W
R521	1-216-659-11	s	METAL, CHIP 2.2k 0.5% 1/10W
R522	1-216-651-11	s	METAL, CHIP 1k 0.5% 1/10W
R523	1-216-025-91	s	METAL, CHIP 100 5% 1/10W
R524	1-216-057-00	s	METAL, CHIP 2.2k 5% 1/10W
R525	1-216-057-00	s	METAL, CHIP 2.2k 5% 1/10W
R526	1-216-025-91	s	METAL, CHIP 100 5% 1/10W
R527	1-216-041-00	s	METAL, CHIP 470 5% 1/10W
R528	1-216-627-11	s	METAL, CHIP 100 0.5% 1/10W
R529	1-216-661-11	s	METAL, CHIP 2.7k 0.5% 1/10W
R530	1-216-295-91	s	RES, CHIP 0
R531	1-216-057-00	s	METAL, CHIP 2.2k 5% 1/10W
R532	1-216-025-91	s	METAL, CHIP 100 5% 1/10W
R533	1-216-017-91	s	METAL, CHIP 47 5% 1/10W
R534	1-216-055-00	s	METAL, CHIP 1.8k 5% 1/10W
R535	1-216-041-00	s	METAL, CHIP 470 5% 1/10W
R536	1-208-774-11	s	METAL, CHIP 470 5% 1/10W
R537	1-208-784-11	s	METAL, CHIP 1.2k 0.5% 1/10W
R538	1-208-774-11	s	METAL, CHIP 470 5% 1/10W
R539	1-208-774-11	s	METAL, CHIP 470 5% 1/10W
R540	1-216-025-91	s	METAL, CHIP 100 5% 1/10W
R541	1-216-041-00	s	METAL, CHIP 470 5% 1/10W
R542	1-216-025-91	s	METAL, CHIP 100 5% 1/10W
R544	1-216-061-00	s	METAL, CHIP 3.3k 5% 1/10W
R546	1-216-025-91	s	METAL, CHIP 100 5% 1/10W
R547	1-216-049-91	s	METAL, CHIP 1k 5% 1/10W
R548	1-216-049-91	s	METAL, CHIP 1k 5% 1/10W
R549	1-216-639-11	s	METAL, CHIP 330 0.5% 1/10W
R550	1-216-651-11	s	METAL, CHIP 1k 0.5% 1/10W
R551	1-216-041-00	s	METAL, CHIP 470 5% 1/10W
R552	1-208-784-11	s	METAL, CHIP 1.2k 0.5% 1/10W
R553	1-216-065-00	s	METAL, CHIP 4.7k 5% 1/10W
R554	1-216-651-11	s	METAL, CHIP 1k 0.5% 1/10W
R555	1-216-057-00	s	METAL, CHIP 2.2k 5% 1/10W
R556	1-216-049-91	s	METAL, CHIP 1k 5% 1/10W
R557	1-216-049-91	s	METAL, CHIP 1k 5% 1/10W
R558	1-216-025-91	s	METAL, CHIP 100 5% 1/10W
R559	1-216-113-00	s	METAL, CHIP 470k 5% 1/10W
R560	1-216-049-91	s	METAL, CHIP 1k 5% 1/10W
R561	1-216-053-00	s	METAL, CHIP 1.5k 5% 1/10W
R562	1-216-057-00	s	METAL, CHIP 2.2k 5% 1/10W
R563	1-216-049-91	s	METAL, CHIP 1k 5% 1/10W
R564	1-216-049-91	s	METAL, CHIP 1k 5% 1/10W
R565	1-216-057-00	s	METAL, CHIP 2.2k 5% 1/10W
R566	1-216-025-91	s	METAL, CHIP 100 5% 1/10W
R567	1-216-057-00	s	METAL, CHIP 2.2k 5% 1/10W

(VP-44A BOARD(for UVW-1200, NTSC))

Ref. No. or Q'ty	Part No.	SP	Description
R568	1-216-057-00	s	METAL, CHIP 2.2k 5% 1/10W
R569	1-216-057-00	s	METAL, CHIP 2.2k 5% 1/10W
R570	1-216-041-00	s	METAL, CHIP 470 5% 1/10W
R571	1-216-057-00	s	METAL, CHIP 2.2k 5% 1/10W
R572	1-216-041-00	s	METAL, CHIP 470 5% 1/10W
R573	1-216-041-00	s	METAL, CHIP 470 5% 1/10W
R574	1-216-041-00	s	METAL, CHIP 470 5% 1/10W
R575	1-216-073-00	s	METAL, CHIP 10k 5% 1/10W
R576	1-216-049-91	s	METAL, CHIP 1k 5% 1/10W
R577	1-216-049-91	s	METAL, CHIP 1k 5% 1/10W
R578	1-216-049-91	s	METAL, CHIP 1k 5% 1/10W
R579	1-216-041-00	s	METAL, CHIP 470 5% 1/10W
R580	1-216-049-91	s	METAL, CHIP 1k 5% 1/10W
R581	1-216-053-00	s	METAL, CHIP 1.5k 5% 1/10W
R582	1-216-025-91	s	METAL, CHIP 100 5% 1/10W
R583	1-216-017-91	s	METAL, CHIP 47 5% 1/10W
R584	1-216-017-91	s	METAL, CHIP 47 5% 1/10W
R585	1-216-667-11	s	METAL, CHIP 4.7k 0.5% 1/10W
R586	1-216-651-11	s	METAL, CHIP 1k 0.5% 1/10W
R587	1-216-073-00	s	METAL, CHIP 10k 5% 1/10W
R588	1-208-784-11	s	METAL, CHIP 1.2k 0.5% 1/10W
R589	1-216-049-91	s	METAL, CHIP 1k 5% 1/10W
R590	1-216-081-00	s	METAL, CHIP 22k 5% 1/10W
R591	1-216-624-11	s	METAL, CHIP 75 0.5% 1/10W
R592	1-216-624-11	s	METAL, CHIP 75 0.5% 1/10W
R593	1-216-624-11	s	METAL, CHIP 75 0.5% 1/10W
R594	1-216-624-11	s	METAL, CHIP 75 0.5% 1/10W
R595	1-216-097-91	s	METAL, CHIP 100k 5% 1/10W
R601-606	1-216-049-91	s	METAL, CHIP 1k 5% 1/10W
R607	1-216-057-00	s	METAL, CHIP 2.2k 5% 1/10W
R608	1-216-057-00	s	METAL, CHIP 2.2k 5% 1/10W
R609	1-216-033-00	s	METAL, CHIP 220 5% 1/10W
R610	1-216-033-00	s	METAL, CHIP 220 5% 1/10W
R611	1-216-045-00	s	METAL, CHIP 680 5% 1/10W
R612	1-216-045-00	s	METAL, CHIP 680 5% 1/10W
R613	1-216-077-00	s	METAL, CHIP 15k 5% 1/10W
R614	1-216-077-00	s	METAL, CHIP 15k 5% 1/10W
R615	1-216-017-91	s	METAL, CHIP 47 5% 1/10W
R616	1-216-017-91	s	METAL, CHIP 47 5% 1/10W
R617	1-216-027-00	s	METAL, CHIP 120 5% 1/10W
R618	1-216-027-00	s	METAL, CHIP 120 5% 1/10W
R621	1-216-049-91	s	METAL, CHIP 1k 5% 1/10W
R622	1-216-049-91	s	METAL, CHIP 1k 5% 1/10W
R623	1-216-057-00	s	METAL, CHIP 2.2k 5% 1/10W
R624	1-216-057-00	s	METAL, CHIP 2.2k 5% 1/10W
R625	1-216-049-91	s	METAL, CHIP 1k 5% 1/10W
R626	1-216-057-00	s	METAL, CHIP 2.2k 5% 1/10W
R629	1-216-049-91	s	METAL, CHIP 1k 5% 1/10W
R630	1-216-121-91	s	METAL, CHIP 1M 5% 1/10W
R631	1-216-121-91	s	METAL, CHIP 1M 5% 1/10W
R632	1-216-659-11	s	METAL, CHIP 2.2k 0.5% 1/10W
R633	1-216-049-91	s	METAL, CHIP 1k 5% 1/10W
R634	1-216-049-91	s	METAL, CHIP 1k 5% 1/10W
R635	1-216-089-91	s	METAL, CHIP 47k 5% 1/10W
R636	1-216-049-91	s	METAL, CHIP 1k 5% 1/10W
R637	1-216-089-91	s	METAL, CHIP 47k 5% 1/10W
R638	1-216-049-91	s	METAL, CHIP 1k 5% 1/10W
R639	1-216-049-91	s	METAL, CHIP 1k 5% 1/10W
R640	1-216-049-91	s	METAL, CHIP 1k 5% 1/10W

Note: In this list * marked parts are design changed.
Refer to pages 18-29 to 18-31 for applicable serial numbers.

Ref. No. or Q'ty	Part No.	SP	Description
R643	1-216-057-00	s	METAL, CHIP 2.2k 5% 1/10W
R644	1-216-057-00	s	METAL, CHIP 2.2k 5% 1/10W
R646	1-216-661-11	s	METAL, CHIP 2.7k 0.5% 1/10W
R647	1-208-800-11	s	METAL, CHIP 5.6k 0.5% 1/10W
R648	1-216-065-00	s	METAL, CHIP 4.7k 5% 1/10W
R649	1-216-065-00	s	METAL, CHIP 4.7k 5% 1/10W
R650	1-216-061-00	s	METAL, CHIP 3.3k 5% 1/10W
R651	1-216-057-00	s	METAL, CHIP 2.2k 5% 1/10W
R652	1-216-057-00	s	METAL, CHIP 2.2k 5% 1/10W
R653	1-216-649-11	s	METAL, CHIP 820 0.5% 1/10W
R654	1-216-065-00	s	METAL, CHIP 4.7k 5% 1/10W
R655	1-216-065-00	s	METAL, CHIP 4.7k 5% 1/10W
R657	1-216-041-00	s	METAL, CHIP 470 5% 1/10W
R658	1-216-041-00	s	METAL, CHIP 470 5% 1/10W
R659	1-216-049-91	s	METAL, CHIP 1k 5% 1/10W
R660	1-216-037-00	s	METAL, CHIP 330 5% 1/10W
R662	1-216-079-00	s	METAL, CHIP 18k 5% 1/10W
R663	1-216-077-00	s	METAL, CHIP 15k 5% 1/10W
R664	1-216-081-00	s	METAL, CHIP 22k 5% 1/10W
R665	1-216-081-00	s	METAL, CHIP 22k 5% 1/10W
R666	1-216-097-91	s	METAL, CHIP 100k 5% 1/10W
R667	1-216-049-91	s	METAL, CHIP 1k 5% 1/10W
R671	1-216-655-11	s	METAL, CHIP 1.5k 0.5% 1/10W
R672	1-216-049-91	s	METAL, CHIP 1k 5% 1/10W
R673	1-216-049-91	s	METAL, CHIP 1k 5% 1/10W
R674	1-216-655-11	s	METAL, CHIP 1.5k 0.5% 1/10W
R675	1-216-049-91	s	METAL, CHIP 1k 5% 1/10W
R676	1-216-057-00	s	METAL, CHIP 2.2k 5% 1/10W
R677	1-216-647-11	s	METAL, CHIP 680 0.5% 1/10W
R679	1-216-661-11	s	METAL, CHIP 2.7k 0.5% 1/10W
R680	1-216-057-00	s	METAL, CHIP 2.2k 5% 1/10W
R681	1-216-045-00	s	METAL, CHIP 680 5% 1/10W
R682	1-216-639-11	s	METAL, CHIP 330 0.5% 1/10W
R683	1-216-651-11	s	METAL, CHIP 1k 0.5% 1/10W
R684	1-216-049-91	s	METAL, CHIP 1k 5% 1/10W
R685	1-216-025-91	s	METAL, CHIP 100 5% 1/10W
R686	1-216-025-91	s	METAL, CHIP 100 5% 1/10W
R687	1-216-081-00	s	METAL, CHIP 22k 5% 1/10W
R688	1-216-095-00	s	METAL, CHIP 82k 5% 1/10W
R689	1-216-624-11	s	METAL, CHIP 75 0.5% 1/10W
R690	1-216-073-00	s	METAL, CHIP 10k 5% 1/10W
R691	1-216-073-00	s	METAL, CHIP 10k 5% 1/10W
R692	1-208-785-11	s	METAL, CHIP 1.3k 0.5% 1/10W
R693	1-216-652-11	s	METAL, CHIP 1.1k 0.5% 1/10W
R694	1-216-666-11	s	METAL, CHIP 4.3k 0.5% 1/10W
*R695	1-216-295-91	s	RES, CHIP 0
R701	1-216-025-91	s	METAL, CHIP 100 5% 1/10W
R702	1-216-025-91	s	METAL, CHIP 100 5% 1/10W
R703	1-216-049-91	s	METAL, CHIP 1k 5% 1/10W
R704	1-216-049-91	s	METAL, CHIP 1k 5% 1/10W
R705	1-216-049-91	s	METAL, CHIP 1k 5% 1/10W
R706	1-216-049-91	s	METAL, CHIP 1k 5% 1/10W
R707	1-208-784-11	s	METAL, CHIP 1.2k 0.5% 1/10W
R708	1-208-784-11	s	METAL, CHIP 1.2k 0.5% 1/10W
R709	1-216-065-00	s	METAL, CHIP 4.7k 5% 1/10W
R710	1-216-065-00	s	METAL, CHIP 4.7k 5% 1/10W
R711	1-216-025-91	s	METAL, CHIP 100 5% 1/10W
R712	1-216-025-91	s	METAL, CHIP 100 5% 1/10W
R713-718	1-216-049-91	s	METAL, CHIP 1k 5% 1/10W

(VP-44A BOARD(for UVW-1200, NTSC))

Ref. No. or Q'ty	Part No.	SP	Description
R719	1-216-037-00	s	METAL, CHIP 330 5% 1/10W
R720	1-216-037-00	s	METAL, CHIP 330 5% 1/10W
R721	1-216-025-91	s	METAL, CHIP 100 5% 1/10W
R722	1-216-025-91	s	METAL, CHIP 100 5% 1/10W
R723	1-216-025-91	s	METAL, CHIP 100 5% 1/10W
R724	1-216-025-91	s	METAL, CHIP 100 5% 1/10W
R725	1-216-065-00	s	METAL, CHIP 4.7k 5% 1/10W
R726	1-216-065-00	s	METAL, CHIP 4.7k 5% 1/10W
R727	1-216-065-00	s	METAL, CHIP 4.7k 5% 1/10W
R728	1-216-065-00	s	METAL, CHIP 4.7k 5% 1/10W
R729	1-216-041-00	s	METAL, CHIP 470 5% 1/10W
R730	1-216-041-00	s	METAL, CHIP 470 5% 1/10W
R731	1-216-049-91	s	METAL, CHIP 1k 5% 1/10W
R732	1-216-049-91	s	METAL, CHIP 1k 5% 1/10W
R733	1-208-800-11	s	METAL, CHIP 5.6k 0.5% 1/10W
R734	1-216-659-11	s	METAL, CHIP 2.2k 0.5% 1/10W
R735	1-216-057-00	s	METAL, CHIP 2.2k 5% 1/10W
R736	1-208-800-11	s	METAL, CHIP 5.6k 0.5% 1/10W
R737	1-216-659-11	s	METAL, CHIP 2.2k 0.5% 1/10W
R738	1-216-055-00	s	METAL, CHIP 1.8k 5% 1/10W
R739	1-216-017-91	s	METAL, CHIP 47 5% 1/10W
R740	1-216-017-91	s	METAL, CHIP 47 5% 1/10W
R741	1-208-774-11	s	METAL, CHIP 470 5% 1/10W
R742	1-208-774-11	s	METAL, CHIP 470 5% 1/10W
R743	1-208-784-11	s	METAL, CHIP 1.2k 0.5% 1/10W
R744	1-208-774-11	s	METAL, CHIP 470 5% 1/10W
R745	1-208-774-11	s	METAL, CHIP 470 5% 1/10W
R746	1-208-784-11	s	METAL, CHIP 1.2k 0.5% 1/10W
R747	1-208-774-11	s	METAL, CHIP 470 5% 1/10W
R748	1-216-041-00	s	METAL, CHIP 470 5% 1/10W
R749	1-216-663-11	s	METAL, CHIP 3.3k 0.5% 1/10W
R750	1-216-663-11	s	METAL, CHIP 3.3k 0.5% 1/10W
R751	1-216-651-11	s	METAL, CHIP 1k 0.5% 1/10W
R752	1-216-651-11	s	METAL, CHIP 1k 0.5% 1/10W
R755	1-216-639-11	s	METAL, CHIP 330 0.5% 1/10W
R758	1-216-639-11	s	METAL, CHIP 330 0.5% 1/10W
R759	1-216-065-00	s	METAL, CHIP 4.7k 5% 1/10W
R760	1-216-065-00	s	METAL, CHIP 4.7k 5% 1/10W
R761	1-216-624-11	s	METAL, CHIP 75 0.5% 1/10W
R762	1-216-624-11	s	METAL, CHIP 75 0.5% 1/10W
R763-768	1-216-097-91	s	METAL, CHIP 100k 5% 1/10W
R769-775	1-216-049-91	s	METAL, CHIP 1k 5% 1/10W
R776	1-216-113-00	s	METAL, CHIP 470k 5% 1/10W
R777	1-216-049-91	s	METAL, CHIP 1k 5% 1/10W
R778	1-216-049-91	s	METAL, CHIP 1k 5% 1/10W
*9 R779	1-216-049-91	s	METAL, CHIP 1k 5% 1/10W
R780	1-216-097-91	s	METAL, CHIP 100k 5% 1/10W
R781	1-216-049-91	s	METAL, CHIP 1k 5% 1/10W
R782	1-216-097-91	s	METAL, CHIP 100k 5% 1/10W
R784	1-216-049-91	s	METAL, CHIP 1k 5% 1/10W
RV101	1-241-785-11	s	RES, ADJ METAL 10k
RV102	1-241-785-11	s	RES, ADJ METAL 10k
RV103	1-241-761-11	s	RES, ADJ METAL 1k
RV201	1-241-763-11	s	RES, ADJ METAL 4.7k
RV301	1-241-785-11	s	RES, ADJ METAL 10k
RV302	1-241-785-11	s	RES, ADJ METAL 10k
RV303	1-241-761-11	s	RES, ADJ METAL 1k
RV401	1-241-764-11	s	RES, ADJ METAL 10k
RV501	1-241-761-11	s	RES, ADJ METAL 1k

Note: In this list * marked parts are design changed.
Refer to pages 18-29 to 18-31 for applicable serial numbers.

(VP-44A BOARD(for UVW-1200, NTSC))

Ref. No. or Q'ty	Part No.	SP	Description
RV502	1-241-763-11	s	RES, ADJ METAL 4.7k
RV503	1-241-762-11	s	RES, ADJ METAL 2.2k
RV504	1-241-761-11	s	RES, ADJ METAL 1k
RV505	1-241-760-11	s	RES, ADJ METAL 470
RV506-511	1-241-761-11	s	RES, ADJ METAL 1k
RV512	1-241-758-11	s	RES, ADJ METAL 100
RV602	1-241-787-11	s	RES, ADJ METAL 47k
RV603	1-241-787-11	s	RES, ADJ METAL 47k
RV604	1-241-783-11	s	RES, ADJ METAL 2.2k
RV605	1-241-784-11	s	RES, ADJ METAL 4.7k
RV606	1-241-784-11	s	RES, ADJ METAL 4.7k
RV607	1-241-779-11	s	RES, ADJ METAL 100
RV701	1-241-783-11	s	RES, ADJ METAL 2.2k
RV702	1-241-783-11	s	RES, ADJ METAL 2.2k
RV703	1-241-761-11	s	RES, ADJ METAL 1k
RV704	1-241-761-11	s	RES, ADJ METAL 1k
RV705	1-241-763-11	s	RES, ADJ METAL 4.7k
RV706	1-241-763-11	s	RES, ADJ METAL 4.7k
RV707	1-241-760-11	s	RES, ADJ METAL 470
RV708	1-241-760-11	s	RES, ADJ METAL 470
RV709	1-241-761-11	s	RES, ADJ METAL 1k
RV710	1-241-761-11	s	RES, ADJ METAL 1k
TH201	1-807-972-11	s	THERMISTOR SV-1715 1.25k
TH401	1-807-972-11	s	THERMISTOR SV-1715 1.25k
TH601	1-807-972-11	s	THERMISTOR SV-1715 1.25k

VP-44AP BOARD(for UVW-1400P, PAL)

Ref. No. or Q'ty	Part No.	SP	Description	
VP-44AP board is used for UVW-1200P.				
1pc	A-8275-610-A	o	MOUNTED CIRCUIT BOARD, VP-44AP	
1pc	3-182-386-02	o	PLATE, SHIELD (L), CARD	
1pc	7-621-759-45	s	SCREW, +PSW2.6x6	
1pc	3-179-084-01	s	LEVER (R), PC BOARD	
1pc	3-179-085-01	s	LEVER (L), PC BOARD	
*C51	1-163-033-91	s	CERAMIC, CHIP 0.022uF 50V	*9
C101	1-163-033-91	s	CERAMIC, CHIP 0.022uF 50V	
C102	1-163-033-91	s	CERAMIC, CHIP 0.022uF 50V	
C103	1-163-275-11	s	CERAMIC, CHIP 0.001uF 5% 50V	
C104	1-163-033-91	s	CERAMIC, CHIP 0.022uF 50V	
C105	1-163-033-91	s	CERAMIC, CHIP 0.022uF 50V	
C106	1-126-933-11	s	ELECT 100uF 20% 16V	
C107	1-163-033-91	s	CERAMIC, CHIP 0.022uF 50V	
C108	1-163-033-91	s	CERAMIC, CHIP 0.022uF 50V	
C109	1-163-108-00	s	CERAMIC, CHIP 43pF 5% 50V	
C110	1-163-249-11	s	CERAMIC, CHIP 82pF 5% 50V	
C111	1-163-108-00	s	CERAMIC, CHIP 43pF 5% 50V	
C112	1-124-903-11	s	ELECT 1uF 20% 50V	
C113	1-124-903-11	s	ELECT 1uF 20% 50V	
C114	1-163-275-11	s	CERAMIC, CHIP 0.001uF 5% 50V	
C115	1-163-033-91	s	CERAMIC, CHIP 0.022uF 50V	
C116	1-163-033-91	s	CERAMIC, CHIP 0.022uF 50V	
C117	1-163-033-91	s	CERAMIC, CHIP 0.022uF 50V	
C118	1-163-245-11	s	CERAMIC, CHIP 56pF 5% 50V	
C119	1-163-235-11	s	CERAMIC, CHIP 22pF 5% 50V	
C120-127	1-163-033-91	s	CERAMIC, CHIP 0.022uF 50V	
C128	1-163-133-00	s	CERAMIC, CHIP 470pF 5% 50V	
C129	1-163-033-91	s	CERAMIC, CHIP 0.022uF 50V	
C130	1-163-033-91	s	CERAMIC, CHIP 0.022uF 50V	
C131	1-126-933-11	s	ELECT 100uF 20% 16V	
C132	1-163-033-91	s	CERAMIC, CHIP 0.022uF 50V	
C133	1-163-113-00	s	CERAMIC, CHIP 68pF 5% 50V	
C134-142	1-163-033-91	s	CERAMIC, CHIP 0.022uF 50V	
C143	1-126-933-11	s	ELECT 100uF 20% 16V	
C144	1-126-933-11	s	ELECT 100uF 20% 16V	
C145	1-126-933-11	s	ELECT 100uF 20% 16V	
C146	1-126-933-11	s	ELECT 100uF 20% 16V	
C147	1-163-231-11	s	CERAMIC, CHIP 15pF 5% 50V	
C148	1-163-241-11	s	CERAMIC, CHIP 39pF 5% 50V	
C149	1-163-033-91	s	CERAMIC, CHIP 0.022uF 50V	
C150	1-126-933-11	s	ELECT 100uF 20% 16V	
C151	1-163-229-11	s	CERAMIC, CHIP 12pF 5% 50V	
C201-205	1-163-033-91	s	CERAMIC, CHIP 0.022uF 50V	
C207-212	1-163-033-91	s	CERAMIC, CHIP 0.022uF 50V	
C213	1-163-222-11	s	CERAMIC, CHIP 5pF 50V	
C214	1-163-222-11	s	CERAMIC, CHIP 5pF 50V	
C215	1-126-925-11	s	ELECT 470uF 20% 10V	
C216	1-163-033-91	s	CERAMIC, CHIP 0.022uF 50V	
C217	1-163-033-91	s	CERAMIC, CHIP 0.022uF 50V	
C218	1-163-033-91	s	CERAMIC, CHIP 0.022uF 50V	
C219	1-163-222-11	s	CERAMIC, CHIP 5pF 50V	
C220	1-164-161-11	s	CERAMIC, CHIP 0.0022uF 10% 100V	
C221	1-163-091-00	s	CERAMIC, CHIP 8pF 50V	
C222	1-163-033-91	s	CERAMIC, CHIP 0.022uF 50V	
C223	1-163-033-91	s	CERAMIC, CHIP 0.022uF 50V	
C224	1-126-925-11	s	ELECT 470uF 20% 10V	
C225	1-126-925-11	s	ELECT 470uF 20% 10V	

Note: In this list * marked parts are design changed.
Refer to pages 18-29 to 18-31 for applicable serial numbers.

(VP-44AP BOARD(for UVW-1400P, PAL))

Ref. No. or Q'ty	Part No.	SP	Description
C226-230	1-163-033-91	s	CERAMIC, CHIP 0.022uF 50V
C231	1-126-925-11	s	ELECT 470uF 20% 10V
C232	1-163-033-91	s	CERAMIC, CHIP 0.022uF 50V
C234	1-107-552-11	s	MICA, CHIP 150pF 1% 50V
C235	1-126-933-11	s	ELECT 100uF 20% 16V
C236	1-163-033-91	s	CERAMIC, CHIP 0.022uF 50V
C237	1-126-963-11	s	ELECT 4.7uF 20% 50V
C238	1-163-235-11	s	CERAMIC, CHIP 22pF 5% 50V
C239	1-163-114-00	s	CERAMIC, CHIP 75pF 5% 50V
C240	1-163-033-91	s	CERAMIC, CHIP 0.022uF 50V
C241	1-163-241-11	s	CERAMIC, CHIP 39pF 5% 50V
C242	1-163-033-91	s	CERAMIC, CHIP 0.022uF 50V
C243	1-163-033-91	s	CERAMIC, CHIP 0.022uF 50V
C244	1-163-033-91	s	CERAMIC, CHIP 0.022uF 50V
C245	1-126-925-11	s	ELECT 470uF 20% 10V
C246	1-126-933-11	s	ELECT 100uF 20% 16V
C247	1-163-033-91	s	CERAMIC, CHIP 0.022uF 50V
C248	1-163-033-91	s	CERAMIC, CHIP 0.022uF 50V
C249	1-126-933-11	s	ELECT 100uF 20% 16V
C250	1-126-933-11	s	ELECT 100uF 20% 16V
C251	1-126-964-11	s	ELECT 10uF 20% 50V
C252	1-163-243-11	s	CERAMIC, CHIP 47pF 5% 50V
C253	1-163-033-91	s	CERAMIC, CHIP 0.022uF 50V
C301	1-163-033-91	s	CERAMIC, CHIP 0.022uF 50V
C302	1-163-033-91	s	CERAMIC, CHIP 0.022uF 50V
C303	1-163-275-11	s	CERAMIC, CHIP 0.001uF 5% 50V
C304	1-163-033-91	s	CERAMIC, CHIP 0.022uF 50V
C305	1-126-933-11	s	ELECT 100uF 20% 16V
C306	1-163-033-91	s	CERAMIC, CHIP 0.022uF 50V
C307	1-163-033-91	s	CERAMIC, CHIP 0.022uF 50V
C308	1-163-033-91	s	CERAMIC, CHIP 0.022uF 50V
C309	1-163-110-00	s	CERAMIC, CHIP 51pF 5% 50V
C310	1-163-251-11	s	CERAMIC, CHIP 100pF 5% 50V
C311	1-163-110-00	s	CERAMIC, CHIP 51pF 5% 50V
C312	1-124-903-11	s	ELECT 1uF 20% 50V
C313	1-124-903-11	s	ELECT 1uF 20% 50V
C314	1-163-275-11	s	CERAMIC, CHIP 0.001uF 5% 50V
C315	1-163-135-00	s	CERAMIC, CHIP 560pF 5% 50V
C316	1-163-257-11	s	CERAMIC, CHIP 180pF 5% 50V
C317	1-163-033-91	s	CERAMIC, CHIP 0.022uF 50V
C318	1-163-033-91	s	CERAMIC, CHIP 0.022uF 50V
C319	1-163-113-00	s	CERAMIC, CHIP 68pF 5% 50V
C320	1-163-033-91	s	CERAMIC, CHIP 0.022uF 50V
C321	1-163-033-91	s	CERAMIC, CHIP 0.022uF 50V
C322	1-163-235-11	s	CERAMIC, CHIP 22pF 5% 50V
C323	1-163-033-91	s	CERAMIC, CHIP 0.022uF 50V
C324	1-163-033-91	s	CERAMIC, CHIP 0.022uF 50V
C325	1-163-033-91	s	CERAMIC, CHIP 0.022uF 50V
C326	1-163-033-91	s	CERAMIC, CHIP 0.022uF 50V
C327	1-163-133-00	s	CERAMIC, CHIP 470pF 5% 50V
C328	1-163-033-91	s	CERAMIC, CHIP 0.022uF 50V
C329	1-163-033-91	s	CERAMIC, CHIP 0.022uF 50V
C330	1-163-033-91	s	CERAMIC, CHIP 0.022uF 50V
C331	1-163-033-91	s	CERAMIC, CHIP 0.022uF 50V
C332	1-126-933-11	s	ELECT 100uF 20% 16V
C333	1-163-033-91	s	CERAMIC, CHIP 0.022uF 50V
C334	1-163-251-11	s	CERAMIC, CHIP 100pF 5% 50V
C335-339	1-163-033-91	s	CERAMIC, CHIP 0.022uF 50V
C340	1-126-933-11	s	ELECT 100uF 20% 16V

(VP-44AP BOARD(for UVW-1400P, PAL))

Ref. No. or Q'ty	Part No.	SP	Description
C341	1-163-033-91	s	CERAMIC, CHIP 0.022uF 50V
C342	1-163-033-91	s	CERAMIC, CHIP 0.022uF 50V
C343	1-126-933-11	s	ELECT 100uF 20% 16V
C344	1-163-033-91	s	CERAMIC, CHIP 0.022uF 50V
C345	1-163-033-91	s	CERAMIC, CHIP 0.022uF 50V
C346	1-163-231-11	s	CERAMIC, CHIP 15pF 5% 50V
C347	1-126-933-11	s	ELECT 100uF 20% 16V
C348	1-126-933-11	s	ELECT 100uF 20% 16V
C349	1-163-241-11	s	CERAMIC, CHIP 39pF 5% 50V
C350	1-163-033-91	s	CERAMIC, CHIP 0.022uF 50V
C351	1-126-933-11	s	ELECT 100uF 20% 16V
C401-408	1-163-033-91	s	CERAMIC, CHIP 0.022uF 50V
C409	1-126-925-11	s	ELECT 470uF 20% 10V
C410	1-163-033-91	s	CERAMIC, CHIP 0.022uF 50V
C411	1-163-033-91	s	CERAMIC, CHIP 0.022uF 50V
C412	1-163-222-11	s	CERAMIC, CHIP 5pF 50V
C413	1-163-222-11	s	CERAMIC, CHIP 5pF 50V
C414	1-163-033-91	s	CERAMIC, CHIP 0.022uF 50V
C415	1-164-161-11	s	CERAMIC, CHIP 0.0022uF 10% 100V
C416	1-163-222-11	s	CERAMIC, CHIP 5pF 50V
C417	1-163-033-91	s	CERAMIC, CHIP 0.022uF 50V
C418	1-163-033-91	s	CERAMIC, CHIP 0.022uF 50V
C419	1-126-925-11	s	ELECT 470uF 20% 10V
C420	1-126-925-11	s	ELECT 470uF 20% 10V
C421-425	1-163-033-91	s	CERAMIC, CHIP 0.022uF 50V
C426	1-126-933-11	s	ELECT 100uF 20% 16V
C427	1-126-925-11	s	ELECT 470uF 20% 10V
C428	1-163-033-91	s	CERAMIC, CHIP 0.022uF 50V
C429	1-163-222-11	s	CERAMIC, CHIP 5pF 50V
C430	1-107-552-11	s	MICA, CHIP 150pF 1% 50V
C431	1-163-033-91	s	CERAMIC, CHIP 0.022uF 50V
C432	1-126-963-11	s	ELECT 4.7uF 20% 50V
C433	1-163-239-11	s	CERAMIC, CHIP 33pF 5% 50V
C434	1-163-033-91	s	CERAMIC, CHIP 0.022uF 50V
C435	1-163-033-91	s	CERAMIC, CHIP 0.022uF 50V
C436	1-163-251-11	s	CERAMIC, CHIP 100pF 5% 50V
C437	1-126-925-11	s	ELECT 470uF 20% 10V
C438	1-126-933-11	s	ELECT 100uF 20% 16V
C439	1-163-033-91	s	CERAMIC, CHIP 0.022uF 50V
C440	1-163-033-91	s	CERAMIC, CHIP 0.022uF 50V
C441	1-163-033-91	s	CERAMIC, CHIP 0.022uF 50V
C442	1-126-933-11	s	ELECT 100uF 20% 16V
C443	1-126-933-11	s	ELECT 100uF 20% 16V
C502	1-163-033-91	s	CERAMIC, CHIP 0.022uF 50V
C503	1-126-933-11	s	ELECT 100uF 20% 16V
C504	1-126-933-11	s	ELECT 100uF 20% 16V
C505	1-163-033-91	s	CERAMIC, CHIP 0.022uF 50V
C506	1-163-033-91	s	CERAMIC, CHIP 0.022uF 50V
C507	1-163-033-91	s	CERAMIC, CHIP 0.022uF 50V
C508	1-163-033-91	s	CERAMIC, CHIP 0.022uF 50V
C509	1-163-227-11	s	CERAMIC, CHIP 10pF 5% 50V
C510	1-163-251-11	s	CERAMIC, CHIP 100pF 5% 50V
C511	1-163-251-11	s	CERAMIC, CHIP 100pF 5% 50V
C512	1-131-353-00	s	TANTALUM 10uF 10% 35V
C513	1-131-353-00	s	TANTALUM 10uF 10% 35V
C514	1-163-033-91	s	CERAMIC, CHIP 0.022uF 50V
C515	1-130-491-00	s	MYLAR 0.047uF 5% 50V
C516	1-163-033-91	s	CERAMIC, CHIP 0.022uF 50V
C517	1-163-033-91	s	CERAMIC, CHIP 0.022uF 50V

Note: In this list * marked parts are design changed.
Refer to pages 18-29 to 18-31 for applicable serial numbers.

(VP-44AP BOARD(for UVW-1400P, PAL))

Ref. No. or Q'ty	Part No.	SP	Description	
C518	1-163-227-11	s	CERAMIC, CHIP 10pF 5% 50V	
C519	1-163-235-11	s	CERAMIC, CHIP 22pF 5% 50V	
C520-526	1-163-033-91	s	CERAMIC, CHIP 0.022uF 50V	
C527	1-126-933-11	s	ELECT 100uF 20% 16V	
C528	1-163-033-91	s	CERAMIC, CHIP 0.022uF 50V	
C529	1-163-033-91	s	CERAMIC, CHIP 0.022uF 50V	
C530	1-163-033-91	s	CERAMIC, CHIP 0.022uF 50V	
C531	1-163-222-11	s	CERAMIC, CHIP 5pF 50V	
C532	1-131-353-00	s	TANTALUM 10uF 10% 35V	
C533	1-131-353-00	s	TANTALUM 10uF 10% 35V	
C534	1-126-933-11	s	ELECT 100uF 20% 16V	
C535	1-163-033-91	s	CERAMIC, CHIP 0.022uF 50V	
C536	1-163-033-91	s	CERAMIC, CHIP 0.022uF 50V	
C537	1-130-491-00	s	MYLAR 0.047uF 5% 50V	
C538	1-163-033-91	s	CERAMIC, CHIP 0.022uF 50V	
C539	1-163-227-11	s	CERAMIC, CHIP 10pF 5% 50V	
C540	1-163-033-91	s	CERAMIC, CHIP 0.022uF 50V	
C541	1-163-237-11	s	CERAMIC, CHIP 27pF 5% 50V	
C542	1-163-033-91	s	CERAMIC, CHIP 0.022uF 50V	
C543	1-163-033-91	s	CERAMIC, CHIP 0.022uF 50V	
C544	1-163-033-91	s	CERAMIC, CHIP 0.022uF 50V	
C545	1-163-033-91	s	CERAMIC, CHIP 0.022uF 50V	
C546	1-163-227-11	s	CERAMIC, CHIP 10pF 5% 50V	
C547	1-163-243-11	s	CERAMIC, CHIP 47pF 5% 50V	
C548	1-163-033-91	s	CERAMIC, CHIP 0.022uF 50V	
C549	1-163-033-91	s	CERAMIC, CHIP 0.022uF 50V	
C550	1-163-033-91	s	CERAMIC, CHIP 0.022uF 50V	
C551	1-163-222-11	s	CERAMIC, CHIP 5pF 50V	
C552-556	1-163-033-91	s	CERAMIC, CHIP 0.022uF 50V	
C557	1-126-925-11	s	ELECT 470uF 20% 10V	
C558	1-126-925-11	s	ELECT 470uF 20% 10V	
C559	1-163-033-91	s	CERAMIC, CHIP 0.022uF 50V	
C560	1-163-033-91	s	CERAMIC, CHIP 0.022uF 50V	
C561	1-126-933-11	s	ELECT 100uF 20% 16V	
C562	1-126-933-11	s	ELECT 100uF 20% 16V	
C563	1-126-933-11	s	ELECT 100uF 20% 16V	
C601	1-126-933-11	s	ELECT 100uF 20% 16V	
C602	1-126-933-11	s	ELECT 100uF 20% 16V	
C603-608	1-163-033-91	s	CERAMIC, CHIP 0.022uF 50V	
C609	1-126-933-11	s	ELECT 100uF 20% 16V	
C610	1-126-933-11	s	ELECT 100uF 20% 16V	
C613	1-163-033-91	s	CERAMIC, CHIP 0.022uF 50V	
C614	1-163-033-91	s	CERAMIC, CHIP 0.022uF 50V	
C615	1-126-933-11	s	ELECT 100uF 20% 16V	
C616	1-126-933-11	s	ELECT 100uF 20% 16V	
C617	1-163-033-91	s	CERAMIC, CHIP 0.022uF 50V	
C618	1-163-033-91	s	CERAMIC, CHIP 0.022uF 50V	
C619	1-131-347-00	s	TANTALUM 1uF 10% 35V	
C620	1-131-347-00	s	TANTALUM 1uF 10% 35V	
C621	1-131-347-00	s	TANTALUM 1uF 10% 35V	
C622	1-131-347-00	s	TANTALUM 1uF 10% 35V	
C623	1-163-033-91	s	CERAMIC, CHIP 0.022uF 50V	
C624	1-163-033-91	s	CERAMIC, CHIP 0.022uF 50V	
C625	1-163-033-91	s	CERAMIC, CHIP 0.022uF 50V	
C626	1-130-491-00	s	MYLAR 0.047uF 5% 50V	
C627	1-130-491-00	s	MYLAR 0.047uF 5% 50V	
C628	1-163-033-91	s	CERAMIC, CHIP 0.022uF 50V	
C629	1-163-227-11	s	CERAMIC, CHIP 10pF 5% 50V	
C630	1-163-033-91	s	CERAMIC, CHIP 0.022uF 50V	

(VP-44AP BOARD(for UVW-1400P, PAL))

Ref. No. or Q'ty	Part No.	SP	Description	
C631	1-126-964-11	s	ELECT 10uF 20% 50V	
C632-639	1-163-033-91	s	CERAMIC, CHIP 0.022uF 50V	
C640	1-126-933-11	s	ELECT 100uF 20% 16V	
C641	1-163-033-91	s	CERAMIC, CHIP 0.022uF 50V	
*C642	1-216-295-00	s	METAL, CHIP 0	*8
C643	1-163-243-11	s	CERAMIC, CHIP 47pF 5% 50V	
C644	1-163-227-11	s	CERAMIC, CHIP 10pF 5% 50V	
C645	1-163-033-91	s	CERAMIC, CHIP 0.022uF 50V	
C646	1-163-033-91	s	CERAMIC, CHIP 0.022uF 50V	
C647	1-163-087-00	s	CERAMIC, CHIP 4pF 50V	
C648	1-163-227-11	s	CERAMIC, CHIP 10pF 5% 50V	
C649	1-163-033-91	s	CERAMIC, CHIP 0.022uF 50V	
C650	1-163-033-91	s	CERAMIC, CHIP 0.022uF 50V	
C651	1-163-033-91	s	CERAMIC, CHIP 0.022uF 50V	
C652	1-163-033-91	s	CERAMIC, CHIP 0.022uF 50V	
C653	1-126-933-11	s	ELECT 100uF 20% 16V	
C654	1-163-227-11	s	CERAMIC, CHIP 10pF 5% 50V	
C701	1-126-933-11	s	ELECT 100uF 20% 16V	
C702	1-126-933-11	s	ELECT 100uF 20% 16V	
C703	1-163-033-91	s	CERAMIC, CHIP 0.022uF 50V	
C704	1-163-033-91	s	CERAMIC, CHIP 0.022uF 50V	
C705	1-163-231-11	s	CERAMIC, CHIP 15pF 5% 50V	
C706	1-163-231-11	s	CERAMIC, CHIP 15pF 5% 50V	
C707	1-163-243-11	s	CERAMIC, CHIP 47pF 5% 50V	
C708	1-163-243-11	s	CERAMIC, CHIP 47pF 5% 50V	
C709	1-163-227-11	s	CERAMIC, CHIP 10pF 5% 50V	
C710	1-163-227-11	s	CERAMIC, CHIP 10pF 5% 50V	
C711	1-163-237-11	s	CERAMIC, CHIP 27pF 5% 50V	
C712	1-163-237-11	s	CERAMIC, CHIP 27pF 5% 50V	
C713-725	1-163-033-91	s	CERAMIC, CHIP 0.022uF 50V	
C726-730	1-126-933-11	s	ELECT 100uF 20% 16V	
C731	1-131-353-00	s	TANTALUM 10uF 10% 35V	
C732	1-163-033-91	s	CERAMIC, CHIP 0.022uF 50V	
C733	1-163-033-91	s	CERAMIC, CHIP 0.022uF 50V	
C734	1-163-033-91	s	CERAMIC, CHIP 0.022uF 50V	
C735	1-163-033-91	s	CERAMIC, CHIP 0.022uF 50V	
C736	1-130-487-00	s	MYLAR 0.022uF 5% 50V	
C737	1-163-033-91	s	CERAMIC, CHIP 0.022uF 50V	
C738	1-163-033-91	s	CERAMIC, CHIP 0.022uF 50V	
C739	1-163-033-91	s	CERAMIC, CHIP 0.022uF 50V	
C740	1-126-933-11	s	ELECT 100uF 20% 16V	
C741	1-126-933-11	s	ELECT 100uF 20% 16V	
CN103	1-573-782-21	o	CONNECTOR, PHEC 60P, MALE	
*CN104	1-573-782-21	o	CONNECTOR, PHEC 60P, MALE	*9
CN105	1-506-491-11	s	CONNECTOR 12P, MALE	
*CN601	1-573-782-21	o	CONNECTOR, PHEC 60P, MALE	*8
D201	8-719-123-82	s	DIODE 1SS303-T1	
D401	8-719-123-82	s	DIODE 1SS303-T1	
D501	8-719-123-82	s	DIODE 1SS303-T1	
D502	8-719-941-04	s	DIODE SB007-03CP	
D503	8-719-021-31	s	DIODE UZM5.1B	
D504	8-719-123-82	s	DIODE 1SS303-T1	
D601	8-719-941-04	s	DIODE SB007-03CP	
D701	8-719-123-82	s	DIODE 1SS303-T1	
DL101	1-415-674-11	s	DELAY LINE	
DL301	1-415-546-11	s	DELAY LINE 50nS	
FL201	1-239-819-11	s	FILTER, LOW-PASS	

Note: In this list * marked parts are design changed.
Refer to pages 18-29 to 18-31 for applicable serial numbers.

(VP-44AP BOARD(for UVW-1400P, PAL))

Ref. No. or Q'ty	Part No.	SP	Description	
FL401	1-239-772-11	s	FILTER, LOW-PASS 3MHz	
FL601	1-239-771-11	s	FILTER, LOW-PASS 6MHz	
IC101	8-752-052-75	s	IC CXA1479Q	
IC102	8-759-300-71	s	IC HD14053BFP	
IC103	8-759-908-92	s	IC TL084CNS	
IC104	8-759-702-08	s	IC NJM360M	
IC202	8-752-052-48	s	IC CXA1370Q	
IC203	8-759-700-65	s	IC NJM79L05A	
IC204	1-810-333-11	s	HIC BP-022	
IC205	8-759-189-43	s	IC AN77L05-TA	
IC301	8-752-052-75	s	IC CXA1479Q	
IC302	8-759-300-71	s	IC HD14053BFP	
IC303	8-759-908-92	s	IC TL084CNS	
IC401	8-752-052-48	s	IC CXA1370Q	
IC402	8-759-700-65	s	IC NJM79L05A	
IC403	1-810-333-11	s	HIC BP-022	
IC404	8-759-189-43	s	IC AN77L05-TA	
IC501	8-759-907-81	s	IC SN74LS221NS	
IC502	8-759-908-92	s	IC TL084CNS	
IC504	8-759-168-20	s	IC TA78L09S	
IC505	8-759-700-65	s	IC NJM79L05A	
IC506	8-759-908-92	s	IC TL084CNS	
IC507	8-752-052-73	s	IC CXA1451M	
IC508	8-752-052-73	s	IC CXA1451M	
IC509	8-752-052-73	s	IC CXA1451M	
IC510	8-752-052-73	s	IC CXA1451M	
IC511	8-759-927-46	s	IC SN74HC00ANS	
IC512	8-759-182-84	s	IC PQ05SZ5U	
IC513	8-759-822-95	s	IC L79M05T-FA	
IC514	8-759-300-71	s	IC HD14053BFP	
*IC515	8-759-300-71	s	IC HD14053BFP	*9
IC516	8-759-700-65	s	IC NJM79L05A	
IC601	8-759-981-48	s	IC NJM082M	
IC602	8-759-908-92	s	IC TL084CNS	
IC603	8-759-300-71	s	IC HD14053BFP	
IC604	8-759-908-92	s	IC TL084CNS	
IC605	8-752-054-80	s	IC CXA1521M	
IC606	8-752-054-80	s	IC CXA1521M	
IC607	8-759-168-20	s	IC TA78L09S	
IC608	8-759-906-59	s	IC CX22017	
IC610	8-759-700-65	s	IC NJM79L05A	
IC612	8-752-052-73	s	IC CXA1451M	
IC613	8-759-262-00	s	IC MC14576CF	
IC701	8-752-052-73	s	IC CXA1451M	
IC702	8-752-052-73	s	IC CXA1451M	
IC703	8-759-927-46	s	IC SN74HC00ANS	
IC704	8-759-925-74	s	IC TC74HC04ANS	
IC705	8-759-925-85	s	IC SN74HC32ANS	
IC706	8-759-189-43	s	IC AN77L05-TA	
IC707	8-759-700-65	s	IC NJM79L05A	
IC708	8-759-168-20	s	IC TA78L09S	
L101	1-410-482-31	s	INDUCTOR 100uH	
L102	1-410-466-41	s	INDUCTOR 4.7uH	
L103	1-410-466-41	s	INDUCTOR 4.7uH	
L104	1-410-466-41	s	INDUCTOR 4.7uH	
L105	1-410-482-31	s	INDUCTOR 100uH	
L106	1-410-462-11	s	INDUCTOR 2.2uH	
L107	1-410-482-31	s	INDUCTOR 100uH	

(VP-44AP BOARD(for UVW-1400P, PAL))

Ref. No. or Q'ty	Part No.	SP	Description	
L108	1-410-482-31	s	INDUCTOR 100uH	
L109	1-408-621-31	s	INDUCTOR 330uH	
L110	1-410-482-31	s	INDUCTOR 100uH	
L111	1-410-466-41	s	INDUCTOR 4.7uH	
L201	1-410-471-11	s	INDUCTOR 12uH	
L202	1-410-482-31	s	INDUCTOR 100uH	
L203	1-410-468-11	s	INDUCTOR 6.8uH	
L204	1-410-476-11	s	INDUCTOR 33uH	
L205	1-410-482-31	s	INDUCTOR 100uH	
L206	1-410-482-31	s	INDUCTOR 100uH	
L207	1-410-482-31	s	INDUCTOR 100uH	
L208	1-408-617-31	s	INDUCTOR 150uH	
L301	1-410-482-31	s	INDUCTOR 100uH	
L302	1-410-468-11	s	INDUCTOR 6.8uH	
L303	1-410-468-11	s	INDUCTOR 6.8uH	
L304	1-408-429-00	s	INDUCTOR 470uH	
L305	1-408-429-00	s	INDUCTOR 470uH	
L306	1-408-406-00	s	INDUCTOR 5.6uH	
L307	1-410-482-31	s	INDUCTOR 100uH	
L308	1-410-462-11	s	INDUCTOR 2.2uH	
L309	1-408-621-31	s	INDUCTOR 330uH	
L310	1-410-482-31	s	INDUCTOR 100uH	
L311	1-410-482-31	s	INDUCTOR 100uH	
L312	1-410-482-31	s	INDUCTOR 100uH	
L401	1-410-471-11	s	INDUCTOR 12uH	
L402	1-410-482-31	s	INDUCTOR 100uH	
L403	1-408-408-00	s	INDUCTOR 8.2uH	
L404	1-410-482-31	s	INDUCTOR 100uH	
L405	1-410-482-31	s	INDUCTOR 100uH	
L406	1-410-482-31	s	INDUCTOR 100uH	
L501	1-410-482-31	s	INDUCTOR 100uH	
L503	1-410-482-31	s	INDUCTOR 100uH	
L504	1-410-482-31	s	INDUCTOR 100uH	
L505	1-410-478-11	s	INDUCTOR 47uH	
L506	1-410-476-11	s	INDUCTOR 33uH	
L507	1-410-482-31	s	INDUCTOR 100uH	
L601-606	1-410-482-31	s	INDUCTOR 100uH	
L607	1-408-413-00	s	INDUCTOR 22uH	
L608	1-408-413-00	s	INDUCTOR 22uH	
L702	1-410-482-31	s	INDUCTOR 100uH	
L703	1-410-476-11	s	INDUCTOR 33uH	
L704	1-410-476-11	s	INDUCTOR 33uH	
L706-710	1-412-533-21	s	INDUCTOR 47uH	
*Q51	8-729-904-41	s	TRANSISTOR FMY3	*44
Q101	8-729-117-32	s	TRANSISTOR 2SC4177	
Q102	8-729-117-72	s	TRANSISTOR 2SC4178	
Q103	8-729-143-07	s	TRANSISTOR 2SA1610-YY33	
Q104	8-729-117-72	s	TRANSISTOR 2SC4178	
Q105	8-729-117-72	s	TRANSISTOR 2SC4178	
Q106	8-729-143-07	s	TRANSISTOR 2SA1610-YY33	
Q107-111	8-729-117-72	s	TRANSISTOR 2SC4178	
Q112	8-729-905-18	s	TRANSISTOR DTC144EU	
Q201	8-729-117-72	s	TRANSISTOR 2SC4178	
Q202	8-729-143-07	s	TRANSISTOR 2SA1610-YY33	
Q203	8-729-117-72	s	TRANSISTOR 2SC4178	
Q204	8-729-117-72	s	TRANSISTOR 2SC4178	
Q206	8-729-143-07	s	TRANSISTOR 2SA1610-YY33	
Q207	8-729-117-72	s	TRANSISTOR 2SC4178	

Note: In this list * marked parts are design changed.
Refer to pages 18-29 to 18-31 for applicable serial numbers.

(VP-44AP BOARD(for UVW-1400P, PAL))

Ref. No. or Q'ty	Part No.	SP	Description
Q208	8-729-143-07	s	TRANSISTOR 2SA1610-YY33
Q209	8-729-143-07	s	TRANSISTOR 2SA1610-YY33
Q210	8-729-117-72	s	TRANSISTOR 2SC4178
Q212	8-729-117-72	s	TRANSISTOR 2SC4178
Q215	8-729-117-72	s	TRANSISTOR 2SC4178
Q216	8-729-905-12	s	TRANSISTOR DTA144EU
Q217	8-729-117-72	s	TRANSISTOR 2SC4178
Q218	8-729-143-07	s	TRANSISTOR 2SA1610-YY33
Q219	8-729-117-72	s	TRANSISTOR 2SC4178
Q220	8-729-143-07	s	TRANSISTOR 2SA1610-YY33
Q301	8-729-117-32	s	TRANSISTOR 2SC4177
Q302	8-729-117-72	s	TRANSISTOR 2SC4178
Q303	8-729-117-72	s	TRANSISTOR 2SC4178
Q304	8-729-143-07	s	TRANSISTOR 2SA1610-YY33
Q305	8-729-117-72	s	TRANSISTOR 2SC4178
Q306	8-729-143-07	s	TRANSISTOR 2SA1610-YY33
Q307-311	8-729-117-72	s	TRANSISTOR 2SC4178
Q401	8-729-117-72	s	TRANSISTOR 2SC4178
Q402	8-729-143-07	s	TRANSISTOR 2SA1610-YY33
Q403	8-729-117-72	s	TRANSISTOR 2SC4178
Q404	8-729-117-72	s	TRANSISTOR 2SC4178
Q405	8-729-143-07	s	TRANSISTOR 2SA1610-YY33
Q406	8-729-143-07	s	TRANSISTOR 2SA1610-YY33
Q407	8-729-117-72	s	TRANSISTOR 2SC4178
Q408	8-729-117-72	s	TRANSISTOR 2SC4178
Q409	8-729-117-72	s	TRANSISTOR 2SC4178
Q410	8-729-117-72	s	TRANSISTOR 2SC4178
Q411	8-729-143-07	s	TRANSISTOR 2SA1610-YY33
Q416	8-729-905-12	s	TRANSISTOR DTA144EU
Q417	8-729-117-72	s	TRANSISTOR 2SC4178
Q418	8-729-143-07	s	TRANSISTOR 2SA1610-YY33
Q501	8-729-117-32	s	TRANSISTOR 2SC4177
Q502	8-729-923-06	s	TRANSISTOR FMW8
Q503	8-729-904-04	s	TRANSISTOR FMS2
Q504	8-729-903-82	s	TRANSISTOR FMW2
Q505	8-729-931-46	s	TRANSISTOR FMW7
Q506	8-729-907-26	s	TRANSISTOR IMX1
Q507	8-729-904-41	s	TRANSISTOR FMY3
Q508	8-729-117-32	s	TRANSISTOR 2SC4177
Q509	8-729-117-32	s	TRANSISTOR 2SC4177
Q510	8-729-117-32	s	TRANSISTOR 2SC4177
Q511	8-729-907-26	s	TRANSISTOR IMX1
Q512	8-729-117-32	s	TRANSISTOR 2SC4177
Q513	8-729-117-32	s	TRANSISTOR 2SC4177
Q514	8-729-117-32	s	TRANSISTOR 2SC4177
Q515	8-729-907-26	s	TRANSISTOR IMX1
Q516	8-729-117-32	s	TRANSISTOR 2SC4177
Q517	8-729-117-32	s	TRANSISTOR 2SC4177
Q518	8-729-140-63	s	TRANSISTOR 2SA1611-M5M6
Q519	8-729-143-14	s	TRANSISTOR 2SC4176-B35
Q520	8-729-117-32	s	TRANSISTOR 2SC4177
Q521	8-729-904-41	s	TRANSISTOR FMY3
Q522	8-729-904-41	s	TRANSISTOR FMY3
Q523	8-729-904-41	s	TRANSISTOR FMY3
Q601	8-729-117-32	s	TRANSISTOR 2SC4177
Q602	8-729-117-32	s	TRANSISTOR 2SC4177
Q603	8-729-923-06	s	TRANSISTOR FMW8
Q604	8-729-923-06	s	TRANSISTOR FMW8
Q605	8-729-904-04	s	TRANSISTOR FMS2

(VP-44AP BOARD(for UVW-1400P, PAL))

Ref. No. or Q'ty	Part No.	SP	Description	
Q606	8-729-904-04	s	TRANSISTOR FMS2	
Q607	8-729-903-82	s	TRANSISTOR FMW2	
Q608	8-729-903-82	s	TRANSISTOR FMW2	
Q609	8-729-907-26	s	TRANSISTOR IMX1	
Q610	8-729-907-26	s	TRANSISTOR IMX1	
Q611	8-729-931-46	s	TRANSISTOR FMW7	
Q612	8-729-931-46	s	TRANSISTOR FMW7	
Q613	8-729-140-63	s	TRANSISTOR 2SA1611-M5M6	
Q614-622	8-729-117-32	s	TRANSISTOR 2SC4177	
Q623	8-729-143-14	s	TRANSISTOR 2SC4176-B35	
Q624	8-729-117-32	s	TRANSISTOR 2SC4177	
Q701	8-729-117-32	s	TRANSISTOR 2SC4177	
Q702	8-729-117-32	s	TRANSISTOR 2SC4177	
Q703	8-729-140-63	s	TRANSISTOR 2SA1611-M5M6	
Q704	8-729-140-63	s	TRANSISTOR 2SA1611-M5M6	
Q705	8-729-117-32	s	TRANSISTOR 2SC4177	
Q706	8-729-117-32	s	TRANSISTOR 2SC4177	
Q707	8-729-117-32	s	TRANSISTOR 2SC4177	
Q708	8-729-117-32	s	TRANSISTOR 2SC4177	
Q709	8-729-422-44	s	TRANSISTOR 2SK663	
Q710	8-729-422-44	s	TRANSISTOR 2SK663	
Q711	8-729-422-44	s	TRANSISTOR 2SK663	
Q712	8-729-422-44	s	TRANSISTOR 2SK663	
Q713	8-729-140-63	s	TRANSISTOR 2SA1611-M5M6	
Q714	8-729-140-63	s	TRANSISTOR 2SA1611-M5M6	
Q715	8-729-140-63	s	TRANSISTOR 2SA1611-M5M6	
Q716	8-729-140-63	s	TRANSISTOR 2SA1611-M5M6	
Q717	8-729-117-32	s	TRANSISTOR 2SC4177	
Q718	8-729-907-26	s	TRANSISTOR IMX1	
Q719	8-729-907-26	s	TRANSISTOR IMX1	
Q720	8-729-117-32	s	TRANSISTOR 2SC4177	
Q721	8-729-117-32	s	TRANSISTOR 2SC4177	
Q722	8-729-907-26	s	TRANSISTOR IMX1	
Q723	8-729-907-26	s	TRANSISTOR IMX1	
Q724	8-729-117-32	s	TRANSISTOR 2SC4177	
Q725	8-729-117-32	s	TRANSISTOR 2SC4177	
Q726	8-729-140-63	s	TRANSISTOR 2SA1611-M5M6	
Q727	8-729-140-63	s	TRANSISTOR 2SA1611-M5M6	
*R51	1-216-097-91	s	METAL, CHIP 100k 5% 1/10W	*9
*R52	1-216-073-00	s	METAL, CHIP 10k 5% 1/10W	*9
*R53	1-216-057-00	s	METAL, CHIP 2.2k 5% 1/10W	*44
*R54	1-216-025-91	s	METAL, CHIP 100 5% 1/10W	*44
*R55	1-216-057-00	s	METAL, CHIP 2.2k 5% 1/10W	*44
*R56	1-216-041-00	s	METAL, CHIP 470 5% 1/10W	*44
*R57	1-216-041-00	s	METAL, CHIP 470 5% 1/10W	*9
*R58	1-216-049-91	s	METAL, CHIP 1k 5% 1/10W	*9
R101	1-216-625-11	s	METAL, CHIP 82 0.5% 1/10W	
R102	1-216-625-11	s	METAL, CHIP 82 0.5% 1/10W	
R103	1-216-635-11	s	METAL, CHIP 220 0.5% 1/10W	
R104	1-216-635-11	s	METAL, CHIP 220 0.5% 1/10W	
R105	1-216-025-91	s	METAL, CHIP 100 5% 1/10W	
R106	1-216-057-00	s	METAL, CHIP 2.2k 5% 1/10W	
R108	1-216-025-91	s	METAL, CHIP 100 5% 1/10W	
R109	1-216-025-91	s	METAL, CHIP 100 5% 1/10W	
R110	1-216-049-91	s	METAL, CHIP 1k 5% 1/10W	
R111	1-216-025-91	s	METAL, CHIP 100 5% 1/10W	
R112	1-216-065-00	s	METAL, CHIP 4.7k 5% 1/10W	
R113	1-216-025-91	s	METAL, CHIP 100 5% 1/10W	

Note: In this list * marked parts are design changed.
Refer to pages 18-29 to 18-31 for applicable serial numbers.

(VP-44AP BOARD(for UVW-1400P, PAL))

Ref. No. or Q'ty	Part No.	SP	Description
R114	1-216-057-00	s	METAL, CHIP 2.2k 5% 1/10W
R115	1-216-025-91	s	METAL, CHIP 100 5% 1/10W
R116	1-216-073-00	s	METAL, CHIP 10k 5% 1/10W
R117	1-216-073-00	s	METAL, CHIP 10k 5% 1/10W
R118	1-216-025-91	s	METAL, CHIP 100 5% 1/10W
R119	1-216-057-00	s	METAL, CHIP 2.2k 5% 1/10W
R120	1-216-638-11	s	METAL, CHIP 300 0.5% 1/10W
R121	1-216-065-00	s	METAL, CHIP 4.7k 5% 1/10W
R122	1-216-638-11	s	METAL, CHIP 300 0.5% 1/10W
R123	1-216-025-91	s	METAL, CHIP 100 5% 1/10W
R124	1-216-049-91	s	METAL, CHIP 1k 5% 1/10W
R125	1-216-065-00	s	METAL, CHIP 4.7k 5% 1/10W
R126	1-216-049-91	s	METAL, CHIP 1k 5% 1/10W
R127	1-216-073-00	s	METAL, CHIP 10k 5% 1/10W
R128	1-216-097-91	s	METAL, CHIP 100k 5% 1/10W
R129	1-216-025-91	s	METAL, CHIP 100 5% 1/10W
R130	1-216-025-91	s	METAL, CHIP 100 5% 1/10W
R131	1-208-775-11	s	METAL, CHIP 510 0.5% 1/10W
R132	1-208-774-11	s	METAL, CHIP 470 5% 1/10W
R133	1-216-041-00	s	METAL, CHIP 470 5% 1/10W
R134	1-216-645-11	s	METAL, CHIP 560 0.5% 1/10W
R135	1-216-025-91	s	METAL, CHIP 100 5% 1/10W
R136	1-208-822-11	s	METAL, CHIP 47k 0.5% 1/10W
R137	1-216-659-11	s	METAL, CHIP 2.2k 0.5% 1/10W
R138	1-216-065-00	s	METAL, CHIP 4.7k 5% 1/10W
R139	1-216-073-00	s	METAL, CHIP 10k 5% 1/10W
R140	1-216-025-91	s	METAL, CHIP 100 5% 1/10W
R141	1-216-073-00	s	METAL, CHIP 10k 5% 1/10W
R142	1-216-081-00	s	METAL, CHIP 22k 5% 1/10W
R143	1-216-041-00	s	METAL, CHIP 470 5% 1/10W
R144	1-216-635-11	s	METAL, CHIP 220 0.5% 1/10W
R145	1-216-037-00	s	METAL, CHIP 330 5% 1/10W
R146	1-216-037-00	s	METAL, CHIP 330 5% 1/10W
R147	1-216-065-00	s	METAL, CHIP 4.7k 5% 1/10W
R148	1-216-065-00	s	METAL, CHIP 4.7k 5% 1/10W
R149	1-216-655-11	s	METAL, CHIP 1.5k 0.5% 1/10W
R150	1-208-800-11	s	METAL, CHIP 5.6k 0.5% 1/10W
R151	1-216-025-91	s	METAL, CHIP 100 5% 1/10W
R152	1-216-057-00	s	METAL, CHIP 2.2k 5% 1/10W
R153	1-216-057-00	s	METAL, CHIP 2.2k 5% 1/10W
R154	1-216-037-00	s	METAL, CHIP 330 5% 1/10W
R155	1-216-041-00	s	METAL, CHIP 470 5% 1/10W
R156	1-216-035-00	s	METAL, CHIP 270 5% 1/10W
R157	1-216-037-00	s	METAL, CHIP 330 5% 1/10W
R158	1-216-065-00	s	METAL, CHIP 4.7k 5% 1/10W
R159	1-216-077-00	s	METAL, CHIP 15k 5% 1/10W
R160	1-216-085-00	s	METAL, CHIP 33k 5% 1/10W
R161	1-216-073-00	s	METAL, CHIP 10k 5% 1/10W
R162	1-216-073-00	s	METAL, CHIP 10k 5% 1/10W
R163	1-208-806-11	s	METAL, CHIP 10k 0.5% 1/10W
R164	1-216-659-11	s	METAL, CHIP 2.2k 0.5% 1/10W
R165	1-216-065-00	s	METAL, CHIP 4.7k 5% 1/10W
R166	1-216-037-00	s	METAL, CHIP 330 5% 1/10W
R167	1-216-295-91	s	RES, CHIP 0
R168	1-216-073-00	s	METAL, CHIP 10k 5% 1/10W
R169	1-216-073-00	s	METAL, CHIP 10k 5% 1/10W
R170	1-216-073-00	s	METAL, CHIP 10k 5% 1/10W
R202	1-208-806-11	s	METAL, CHIP 10k 0.5% 1/10W
R203	1-208-806-11	s	METAL, CHIP 10k 0.5% 1/10W

(VP-44AP BOARD(for UVW-1400P, PAL))

Ref. No. or Q'ty	Part No.	SP	Description
R206	1-216-049-91	s	METAL, CHIP 1k 5% 1/10W
R207	1-216-025-91	s	METAL, CHIP 100 5% 1/10W
R208	1-216-025-91	s	METAL, CHIP 100 5% 1/10W
R209	1-216-639-11	s	METAL, CHIP 330 0.5% 1/10W
R210	1-216-057-00	s	METAL, CHIP 2.2k 5% 1/10W
R211	1-216-651-11	s	METAL, CHIP 1k 0.5% 1/10W
R212	1-216-025-91	s	METAL, CHIP 100 5% 1/10W
R213	1-216-639-11	s	METAL, CHIP 330 0.5% 1/10W
R214	1-216-065-00	s	METAL, CHIP 4.7k 5% 1/10W
R215	1-208-784-11	s	METAL, CHIP 1.2k 0.5% 1/10W
R216	1-216-673-11	s	METAL, CHIP 8.2k 0.5% 1/10W
R217	1-208-784-11	s	METAL, CHIP 1.2k 0.5% 1/10W
R218	1-216-073-00	s	METAL, CHIP 10k 5% 1/10W
R219	1-216-073-00	s	METAL, CHIP 10k 5% 1/10W
R220	1-216-025-91	s	METAL, CHIP 100 5% 1/10W
R221	1-216-025-91	s	METAL, CHIP 100 5% 1/10W
R222	1-216-065-00	s	METAL, CHIP 4.7k 5% 1/10W
R223	1-216-025-91	s	METAL, CHIP 100 5% 1/10W
R224	1-216-049-91	s	METAL, CHIP 1k 5% 1/10W
R227	1-216-065-00	s	METAL, CHIP 4.7k 5% 1/10W
R228	1-216-025-91	s	METAL, CHIP 100 5% 1/10W
R229	1-216-055-00	s	METAL, CHIP 1.8k 5% 1/10W
R230	1-216-025-91	s	METAL, CHIP 100 5% 1/10W
R232	1-216-025-91	s	METAL, CHIP 100 5% 1/10W
R233	1-216-055-00	s	METAL, CHIP 1.8k 5% 1/10W
R237	1-216-065-00	s	METAL, CHIP 4.7k 5% 1/10W
R240	1-216-655-11	s	METAL, CHIP 1.5k 0.5% 1/10W
R241	1-216-663-11	s	METAL, CHIP 3.3k 0.5% 1/10W
R244	1-216-646-11	s	METAL, CHIP 620 0.5% 1/10W
R245	1-216-671-11	s	METAL, CHIP 6.8k 0.5% 1/10W
R246	1-216-057-00	s	METAL, CHIP 2.2k 5% 1/10W
R247	1-216-667-11	s	METAL, CHIP 4.7k 0.5% 1/10W
R248	1-208-799-11	s	METAL, CHIP 5.1k 0.5% 1/10W
R249	1-216-057-00	s	METAL, CHIP 2.2k 5% 1/10W
R250	1-216-113-00	s	METAL, CHIP 470k 5% 1/10W
R251	1-216-667-11	s	METAL, CHIP 4.7k 0.5% 1/10W
R253	1-216-687-11	s	METAL, CHIP 33k 0.5% 1/10W
R254	1-216-687-11	s	METAL, CHIP 33k 0.5% 1/10W
R255	1-216-651-11	s	METAL, CHIP 1k 0.5% 1/10W
R256	1-216-025-91	s	METAL, CHIP 100 5% 1/10W
R257	1-216-638-11	s	METAL, CHIP 300 0.5% 1/10W
R258	1-216-665-11	s	METAL, CHIP 3.9k 0.5% 1/10W
R259	1-216-671-11	s	METAL, CHIP 6.8k 0.5% 1/10W
R260	1-216-689-11	s	METAL, CHIP 39k 0.5% 1/10W
R261	1-216-121-91	s	METAL, CHIP 1M 5% 1/10W
R262	1-216-685-11	s	METAL, CHIP 27k 0.5% 1/10W
R263	1-216-073-00	s	METAL, CHIP 10k 5% 1/10W
R264	1-216-025-91	s	METAL, CHIP 100 5% 1/10W
R265	1-216-041-00	s	METAL, CHIP 470 5% 1/10W
R266	1-216-638-11	s	METAL, CHIP 300 0.5% 1/10W
R267	1-216-037-00	s	METAL, CHIP 330 5% 1/10W
R268	1-216-057-00	s	METAL, CHIP 2.2k 5% 1/10W
R269	1-216-041-00	s	METAL, CHIP 470 5% 1/10W
R270	1-216-638-11	s	METAL, CHIP 300 0.5% 1/10W
R271	1-216-049-91	s	METAL, CHIP 1k 5% 1/10W
R272	1-208-751-11	s	METAL, CHIP 51 0.5% 1/10W
R273	1-216-037-00	s	METAL, CHIP 330 5% 1/10W
R274	1-216-295-91	s	RES, CHIP 0
R275	1-216-089-91	s	METAL, CHIP 47k 5% 1/10W

Note: In this list * marked parts are design changed.
Refer to pages 18-29 to 18-31 for applicable serial numbers.

(VP-44AP BOARD(for UVW-1400P, PAL))

Ref. No. or Q'ty	Part No.	SP	Description
R276	1-216-057-00	s	METAL, CHIP 2.2k 5% 1/10W
R277	1-216-671-11	s	METAL, CHIP 6.8k 0.5% 1/10W
R278	1-216-025-91	s	METAL, CHIP 100 5% 1/10W
R301	1-216-625-11	s	METAL, CHIP 82 0.5% 1/10W
R302	1-216-625-11	s	METAL, CHIP 82 0.5% 1/10W
R303	1-216-635-11	s	METAL, CHIP 220 0.5% 1/10W
R304	1-216-635-11	s	METAL, CHIP 220 0.5% 1/10W
R305	1-216-025-91	s	METAL, CHIP 100 5% 1/10W
R306	1-216-049-91	s	METAL, CHIP 1k 5% 1/10W
R307	1-216-025-91	s	METAL, CHIP 100 5% 1/10W
R308	1-216-065-00	s	METAL, CHIP 4.7k 5% 1/10W
R309	1-216-025-91	s	METAL, CHIP 100 5% 1/10W
R310	1-216-025-91	s	METAL, CHIP 100 5% 1/10W
R311	1-216-057-00	s	METAL, CHIP 2.2k 5% 1/10W
R312	1-216-025-91	s	METAL, CHIP 100 5% 1/10W
R313	1-216-057-00	s	METAL, CHIP 2.2k 5% 1/10W
R314	1-216-073-00	s	METAL, CHIP 10k 5% 1/10W
R315	1-216-638-11	s	METAL, CHIP 300 0.5% 1/10W
R316	1-216-073-00	s	METAL, CHIP 10k 5% 1/10W
R317	1-216-025-91	s	METAL, CHIP 100 5% 1/10W
R318	1-216-638-11	s	METAL, CHIP 300 0.5% 1/10W
R319	1-216-065-00	s	METAL, CHIP 4.7k 5% 1/10W
R320	1-216-065-00	s	METAL, CHIP 4.7k 5% 1/10W
R321	1-216-049-91	s	METAL, CHIP 1k 5% 1/10W
R322	1-216-651-11	s	METAL, CHIP 1k 0.5% 1/10W
R323	1-216-049-91	s	METAL, CHIP 1k 5% 1/10W
R324	1-216-025-91	s	METAL, CHIP 100 5% 1/10W
R325	1-208-775-11	s	METAL, CHIP 510 0.5% 1/10W
R326	1-208-774-11	s	METAL, CHIP 470 5% 1/10W
R327	1-216-041-00	s	METAL, CHIP 470 5% 1/10W
R328	1-216-073-00	s	METAL, CHIP 10k 5% 1/10W
R329	1-216-097-91	s	METAL, CHIP 100k 5% 1/10W
R330	1-208-774-11	s	METAL, CHIP 470 5% 1/10W
R331	1-216-025-91	s	METAL, CHIP 100 5% 1/10W
R332	1-216-065-00	s	METAL, CHIP 4.7k 5% 1/10W
R333	1-216-073-00	s	METAL, CHIP 10k 5% 1/10W
R334	1-216-025-91	s	METAL, CHIP 100 5% 1/10W
R335	1-216-073-00	s	METAL, CHIP 10k 5% 1/10W
R336	1-216-635-11	s	METAL, CHIP 220 0.5% 1/10W
R337	1-216-041-00	s	METAL, CHIP 470 5% 1/10W
R338	1-216-037-00	s	METAL, CHIP 330 5% 1/10W
R339	1-216-037-00	s	METAL, CHIP 330 5% 1/10W
R340	1-216-065-00	s	METAL, CHIP 4.7k 5% 1/10W
R341	1-216-065-00	s	METAL, CHIP 4.7k 5% 1/10W
R342	1-216-651-11	s	METAL, CHIP 1k 0.5% 1/10W
R343	1-208-784-11	s	METAL, CHIP 1.2k 0.5% 1/10W
R344	1-216-037-00	s	METAL, CHIP 330 5% 1/10W
R345	1-216-041-00	s	METAL, CHIP 470 5% 1/10W
R346	1-216-037-00	s	METAL, CHIP 330 5% 1/10W
R347	1-216-619-11	s	METAL, CHIP 47 0.5% 1/10W
R348	1-216-057-00	s	METAL, CHIP 2.2k 5% 1/10W
R349	1-216-025-91	s	METAL, CHIP 100 5% 1/10W
R350	1-216-065-00	s	METAL, CHIP 4.7k 5% 1/10W
R351	1-216-057-00	s	METAL, CHIP 2.2k 5% 1/10W
R352	1-216-077-00	s	METAL, CHIP 15k 5% 1/10W
R353	1-216-085-00	s	METAL, CHIP 33k 5% 1/10W
R354	1-216-073-00	s	METAL, CHIP 10k 5% 1/10W
R355	1-216-073-00	s	METAL, CHIP 10k 5% 1/10W
R356	1-208-806-11	s	METAL, CHIP 10k 0.5% 1/10W

(VP-44AP BOARD(for UVW-1400P, PAL))

Ref. No. or Q'ty	Part No.	SP	Description	
R357	1-216-661-11	s	METAL, CHIP 2.7k 0.5% 1/10W	
R358	1-216-065-00	s	METAL, CHIP 4.7k 5% 1/10W	
R359	1-216-037-00	s	METAL, CHIP 330 5% 1/10W	
R401	1-216-025-91	s	METAL, CHIP 100 5% 1/10W	
R402	1-216-025-91	s	METAL, CHIP 100 5% 1/10W	
R403	1-216-639-11	s	METAL, CHIP 330 0.5% 1/10W	
R404	1-216-057-00	s	METAL, CHIP 2.2k 5% 1/10W	
R405	1-216-639-11	s	METAL, CHIP 330 0.5% 1/10W	
R406	1-216-025-91	s	METAL, CHIP 100 5% 1/10W	
R407	1-216-065-00	s	METAL, CHIP 4.7k 5% 1/10W	
R408	1-216-025-91	s	METAL, CHIP 100 5% 1/10W	
R409	1-216-065-00	s	METAL, CHIP 4.7k 5% 1/10W	
R410	1-216-651-11	s	METAL, CHIP 1k 0.5% 1/10W	
R411	1-216-025-91	s	METAL, CHIP 100 5% 1/10W	
R412	1-216-055-00	s	METAL, CHIP 1.8k 5% 1/10W	
R413	1-216-025-91	s	METAL, CHIP 100 5% 1/10W	
R414	1-216-673-11	s	METAL, CHIP 8.2k 0.5% 1/10W	
R415	1-208-774-11	s	METAL, CHIP 470 5% 1/10W	
R416	1-216-025-91	s	METAL, CHIP 100 5% 1/10W	
R417	1-216-055-00	s	METAL, CHIP 1.8k 5% 1/10W	
R418	1-208-784-11	s	METAL, CHIP 1.2k 0.5% 1/10W	
R419	1-216-065-00	s	METAL, CHIP 4.7k 5% 1/10W	
R420	1-216-651-11	s	METAL, CHIP 1k 0.5% 1/10W	
R421	1-216-649-11	s	METAL, CHIP 820 0.5% 1/10W	
R422	1-216-664-11	s	METAL, CHIP 3.6k 0.5% 1/10W	
R423	1-216-073-00	s	METAL, CHIP 10k 5% 1/10W	
R424	1-216-073-00	s	METAL, CHIP 10k 5% 1/10W	
R425	1-216-025-91	s	METAL, CHIP 100 5% 1/10W	
R426	1-208-806-11	s	METAL, CHIP 10k 0.5% 1/10W	
R427	1-216-065-00	s	METAL, CHIP 4.7k 5% 1/10W	
R428	1-216-025-91	s	METAL, CHIP 100 5% 1/10W	
R429	1-216-057-00	s	METAL, CHIP 2.2k 5% 1/10W	
R440	1-216-667-11	s	METAL, CHIP 4.7k 0.5% 1/10W	
R441	1-216-667-11	s	METAL, CHIP 4.7k 0.5% 1/10W	
R442	1-216-057-00	s	METAL, CHIP 2.2k 5% 1/10W	
R443	1-216-113-00	s	METAL, CHIP 470k 5% 1/10W	
R444	1-208-800-11	s	METAL, CHIP 5.6k 0.5% 1/10W	
R446	1-216-687-11	s	METAL, CHIP 33k 0.5% 1/10W	
R447	1-208-812-11	s	METAL, CHIP 18k 0.5% 1/10W	
R448	1-216-651-11	s	METAL, CHIP 1k 0.5% 1/10W	
R449	1-216-025-91	s	METAL, CHIP 100 5% 1/10W	
R450	1-216-639-11	s	METAL, CHIP 330 0.5% 1/10W	
R451	1-216-665-11	s	METAL, CHIP 3.9k 0.5% 1/10W	
R452	1-208-800-11	s	METAL, CHIP 5.6k 0.5% 1/10W	
R453	1-216-689-11	s	METAL, CHIP 39k 0.5% 1/10W	
R454	1-216-121-91	s	METAL, CHIP 1M 5% 1/10W	
R455	1-216-685-11	s	METAL, CHIP 27k 0.5% 1/10W	
R456	1-216-073-00	s	METAL, CHIP 10k 5% 1/10W	
R457	1-216-025-91	s	METAL, CHIP 100 5% 1/10W	
R458	1-216-041-00	s	METAL, CHIP 470 5% 1/10W	
R459	1-216-638-11	s	METAL, CHIP 300 0.5% 1/10W	
R460	1-216-049-91	s	METAL, CHIP 1k 5% 1/10W	
R461	1-208-751-11	s	METAL, CHIP 51 0.5% 1/10W	
R462	1-216-037-00	s	METAL, CHIP 330 5% 1/10W	
R463	1-216-057-00	s	METAL, CHIP 2.2k 5% 1/10W	
R464	1-216-089-91	s	METAL, CHIP 47k 5% 1/10W	
*R500	1-247-855-11	s	CARBON 10k 5% 1/4W	*8
	1-216-073-00	s	METAL, CHIP 10k 5% 1/10W	*9

Note: In this list * marked parts are design changed.
Refer to pages 18-29 to 18-31 for applicable serial numbers.

(VP-44AP BOARD(for UVW-1400P, PAL))

Ref. No. or Q'ty	Part No.	SP	Description
R501	1-208-806-11	s	METAL, CHIP 10k 0.5% 1/10W
R502	1-208-806-11	s	METAL, CHIP 10k 0.5% 1/10W
R503	1-216-049-91	s	METAL, CHIP 1k 5% 1/10W
R504	1-216-049-91	s	METAL, CHIP 1k 5% 1/10W
R505	1-216-089-91	s	METAL, CHIP 47k 5% 1/10W
R506	1-216-049-91	s	METAL, CHIP 1k 5% 1/10W
R507	1-208-806-11	s	METAL, CHIP 10k 0.5% 1/10W
R508	1-216-687-11	s	METAL, CHIP 33k 0.5% 1/10W
R509	1-216-057-00	s	METAL, CHIP 2.2k 5% 1/10W
R510	1-216-049-91	s	METAL, CHIP 1k 5% 1/10W
R511	1-216-121-91	s	METAL, CHIP 1M 5% 1/10W
R512	1-216-049-91	s	METAL, CHIP 1k 5% 1/10W
R513	1-216-049-91	s	METAL, CHIP 1k 5% 1/10W
R514	1-216-033-00	s	METAL, CHIP 220 5% 1/10W
R515	1-216-045-00	s	METAL, CHIP 680 5% 1/10W
R516	1-216-077-00	s	METAL, CHIP 15k 5% 1/10W
R517	1-216-073-00	s	METAL, CHIP 10k 5% 1/10W
R518	1-216-017-91	s	METAL, CHIP 47 5% 1/10W
R519	1-216-027-00	s	METAL, CHIP 120 5% 1/10W
R520	1-216-647-11	s	METAL, CHIP 680 0.5% 1/10W
R521	1-216-659-11	s	METAL, CHIP 2.2k 0.5% 1/10W
R522	1-216-651-11	s	METAL, CHIP 1k 0.5% 1/10W
R523	1-216-025-91	s	METAL, CHIP 100 5% 1/10W
R524	1-216-057-00	s	METAL, CHIP 2.2k 5% 1/10W
R525	1-216-057-00	s	METAL, CHIP 2.2k 5% 1/10W
R526	1-216-025-91	s	METAL, CHIP 100 5% 1/10W
R527	1-216-041-00	s	METAL, CHIP 470 5% 1/10W
R528	1-216-627-11	s	METAL, CHIP 100 0.5% 1/10W
R529	1-216-661-11	s	METAL, CHIP 2.7k 0.5% 1/10W
R530	1-216-295-91	s	RES, CHIP 0
R531	1-216-057-00	s	METAL, CHIP 2.2k 5% 1/10W
R532	1-216-025-91	s	METAL, CHIP 100 5% 1/10W
R533	1-216-017-91	s	METAL, CHIP 47 5% 1/10W
R534	1-216-055-00	s	METAL, CHIP 1.8k 5% 1/10W
R535	1-216-041-00	s	METAL, CHIP 470 5% 1/10W
R536	1-208-774-11	s	METAL, CHIP 470 5% 1/10W
R537	1-208-784-11	s	METAL, CHIP 1.2k 0.5% 1/10W
R538	1-208-774-11	s	METAL, CHIP 470 5% 1/10W
R539	1-208-774-11	s	METAL, CHIP 470 5% 1/10W
R540	1-216-025-91	s	METAL, CHIP 100 5% 1/10W
R541	1-216-041-00	s	METAL, CHIP 470 5% 1/10W
R542	1-216-025-91	s	METAL, CHIP 100 5% 1/10W
R544	1-216-061-00	s	METAL, CHIP 3.3k 5% 1/10W
R546	1-216-025-91	s	METAL, CHIP 100 5% 1/10W
R547	1-216-049-91	s	METAL, CHIP 1k 5% 1/10W
R548	1-216-049-91	s	METAL, CHIP 1k 5% 1/10W
R549	1-216-639-11	s	METAL, CHIP 330 0.5% 1/10W
R550	1-216-651-11	s	METAL, CHIP 1k 0.5% 1/10W
R551	1-216-041-00	s	METAL, CHIP 470 5% 1/10W
R552	1-208-784-11	s	METAL, CHIP 1.2k 0.5% 1/10W
R553	1-216-065-00	s	METAL, CHIP 4.7k 5% 1/10W
R554	1-216-651-11	s	METAL, CHIP 1k 0.5% 1/10W
R555	1-216-057-00	s	METAL, CHIP 2.2k 5% 1/10W
R556	1-216-049-91	s	METAL, CHIP 1k 5% 1/10W
R557	1-216-049-91	s	METAL, CHIP 1k 5% 1/10W
R558	1-216-025-91	s	METAL, CHIP 100 5% 1/10W
R559	1-216-113-00	s	METAL, CHIP 470k 5% 1/10W
R560	1-216-049-91	s	METAL, CHIP 1k 5% 1/10W
R561	1-216-053-00	s	METAL, CHIP 1.5k 5% 1/10W

(VP-44AP BOARD(for UVW-1400P, PAL))

Ref. No. or Q'ty	Part No.	SP	Description
R562	1-216-057-00	s	METAL, CHIP 2.2k 5% 1/10W
R563	1-216-049-91	s	METAL, CHIP 1k 5% 1/10W
R564	1-216-049-91	s	METAL, CHIP 1k 5% 1/10W
R565	1-216-057-00	s	METAL, CHIP 2.2k 5% 1/10W
R566	1-216-025-91	s	METAL, CHIP 100 5% 1/10W
R567	1-216-057-00	s	METAL, CHIP 2.2k 5% 1/10W
R568	1-216-057-00	s	METAL, CHIP 2.2k 5% 1/10W
R569	1-216-057-00	s	METAL, CHIP 2.2k 5% 1/10W
R570	1-216-041-00	s	METAL, CHIP 470 5% 1/10W
R571	1-216-057-00	s	METAL, CHIP 2.2k 5% 1/10W
R572	1-216-041-00	s	METAL, CHIP 470 5% 1/10W
R573	1-216-041-00	s	METAL, CHIP 470 5% 1/10W
R574	1-216-041-00	s	METAL, CHIP 470 5% 1/10W
R575	1-216-073-00	s	METAL, CHIP 10k 5% 1/10W
R576	1-216-049-91	s	METAL, CHIP 1k 5% 1/10W
R577	1-216-049-91	s	METAL, CHIP 1k 5% 1/10W
R578	1-216-049-91	s	METAL, CHIP 1k 5% 1/10W
R579	1-216-041-00	s	METAL, CHIP 470 5% 1/10W
R580	1-216-049-91	s	METAL, CHIP 1k 5% 1/10W
R581	1-216-053-00	s	METAL, CHIP 1.5k 5% 1/10W
R582	1-216-025-91	s	METAL, CHIP 100 5% 1/10W
R583	1-216-017-91	s	METAL, CHIP 47 5% 1/10W
R584	1-216-017-91	s	METAL, CHIP 47 5% 1/10W
R585	1-216-667-11	s	METAL, CHIP 4.7k 0.5% 1/10W
R586	1-216-651-11	s	METAL, CHIP 1k 0.5% 1/10W
R587	1-216-073-00	s	METAL, CHIP 10k 5% 1/10W
R588	1-208-784-11	s	METAL, CHIP 1.2k 0.5% 1/10W
R589	1-216-049-91	s	METAL, CHIP 1k 5% 1/10W
R590	1-216-081-00	s	METAL, CHIP 22k 5% 1/10W
R591	1-216-624-11	s	METAL, CHIP 75 0.5% 1/10W
R592	1-216-624-11	s	METAL, CHIP 75 0.5% 1/10W
R593	1-216-624-11	s	METAL, CHIP 75 0.5% 1/10W
R594	1-216-624-11	s	METAL, CHIP 75 0.5% 1/10W
R595	1-216-097-91	s	METAL, CHIP 100k 5% 1/10W
R601-606	1-216-049-91	s	METAL, CHIP 1k 5% 1/10W
R607	1-216-057-00	s	METAL, CHIP 2.2k 5% 1/10W
R608	1-216-057-00	s	METAL, CHIP 2.2k 5% 1/10W
R609	1-216-033-00	s	METAL, CHIP 220 5% 1/10W
R610	1-216-033-00	s	METAL, CHIP 220 5% 1/10W
R611	1-216-045-00	s	METAL, CHIP 680 5% 1/10W
R612	1-216-045-00	s	METAL, CHIP 680 5% 1/10W
R613	1-216-077-00	s	METAL, CHIP 15k 5% 1/10W
R614	1-216-077-00	s	METAL, CHIP 15k 5% 1/10W
R615	1-216-017-91	s	METAL, CHIP 47 5% 1/10W
R616	1-216-017-91	s	METAL, CHIP 47 5% 1/10W
R617	1-216-027-00	s	METAL, CHIP 120 5% 1/10W
R618	1-216-027-00	s	METAL, CHIP 120 5% 1/10W
R621	1-216-049-91	s	METAL, CHIP 1k 5% 1/10W
R622	1-216-049-91	s	METAL, CHIP 1k 5% 1/10W
R623	1-216-057-00	s	METAL, CHIP 2.2k 5% 1/10W
R624	1-216-057-00	s	METAL, CHIP 2.2k 5% 1/10W
R625	1-216-049-91	s	METAL, CHIP 1k 5% 1/10W
R626	1-216-057-00	s	METAL, CHIP 2.2k 5% 1/10W
R627	1-216-057-00	s	METAL, CHIP 2.2k 5% 1/10W
R628	1-216-295-91	s	RES, CHIP 0
R629	1-216-063-91	s	METAL, CHIP 3.9k 5% 1/10W
R630	1-216-121-91	s	METAL, CHIP 1M 5% 1/10W
R631	1-216-121-91	s	METAL, CHIP 1M 5% 1/10W
R632	1-216-655-11	s	METAL, CHIP 1.5k 0.5% 1/10W

Note: In this list * marked parts are design changed.
Refer to pages 18-29 to 18-31 for applicable serial numbers.

(VP-44AP BOARD(for UVW-1400P, PAL))

Ref. No. or Q'ty	Part No.	SP	Description
R633	1-216-049-91	s	METAL, CHIP 1k 5% 1/10W
R634	1-216-049-91	s	METAL, CHIP 1k 5% 1/10W
R635	1-216-089-91	s	METAL, CHIP 47k 5% 1/10W
R636	1-216-049-91	s	METAL, CHIP 1k 5% 1/10W
R637	1-216-089-91	s	METAL, CHIP 47k 5% 1/10W
R638	1-216-049-91	s	METAL, CHIP 1k 5% 1/10W
R639	1-216-049-91	s	METAL, CHIP 1k 5% 1/10W
R640	1-216-049-91	s	METAL, CHIP 1k 5% 1/10W
R641	1-216-659-11	s	METAL, CHIP 2.2k 0.5% 1/10W
R642	1-216-065-00	s	METAL, CHIP 4.7k 5% 1/10W
R643	1-216-057-00	s	METAL, CHIP 2.2k 5% 1/10W
R644	1-216-057-00	s	METAL, CHIP 2.2k 5% 1/10W
R646	1-216-661-11	s	METAL, CHIP 2.7k 0.5% 1/10W
R647	1-208-800-11	s	METAL, CHIP 5.6k 0.5% 1/10W
R648	1-216-065-00	s	METAL, CHIP 4.7k 5% 1/10W
R649	1-216-065-00	s	METAL, CHIP 4.7k 5% 1/10W
R650	1-216-063-91	s	METAL, CHIP 3.9k 5% 1/10W
R651	1-216-057-00	s	METAL, CHIP 2.2k 5% 1/10W
R652	1-216-057-00	s	METAL, CHIP 2.2k 5% 1/10W
R653	1-216-649-11	s	METAL, CHIP 820 0.5% 1/10W
R654	1-216-065-00	s	METAL, CHIP 4.7k 5% 1/10W
R655	1-216-065-00	s	METAL, CHIP 4.7k 5% 1/10W
R656	1-216-081-00	s	METAL, CHIP 22k 5% 1/10W
R657	1-216-041-00	s	METAL, CHIP 470 5% 1/10W
R658	1-216-041-00	s	METAL, CHIP 470 5% 1/10W
R659	1-216-049-91	s	METAL, CHIP 1k 5% 1/10W
R660	1-216-037-00	s	METAL, CHIP 330 5% 1/10W
R661	1-216-109-00	s	METAL, CHIP 330k 5% 1/10W
R662	1-216-079-00	s	METAL, CHIP 18k 5% 1/10W
R663	1-216-077-00	s	METAL, CHIP 15k 5% 1/10W
R664	1-216-081-00	s	METAL, CHIP 22k 5% 1/10W
R665	1-216-081-00	s	METAL, CHIP 22k 5% 1/10W
R666	1-216-097-91	s	METAL, CHIP 100k 5% 1/10W
R667	1-216-049-91	s	METAL, CHIP 1k 5% 1/10W
R671	1-208-785-11	s	METAL, CHIP 1.3k 0.5% 1/10W
R672	1-216-049-91	s	METAL, CHIP 1k 5% 1/10W
R673	1-216-049-91	s	METAL, CHIP 1k 5% 1/10W
R674	1-216-655-11	s	METAL, CHIP 1.5k 0.5% 1/10W
R675	1-216-049-91	s	METAL, CHIP 1k 5% 1/10W
R676	1-216-057-00	s	METAL, CHIP 2.2k 5% 1/10W
R677	1-216-647-11	s	METAL, CHIP 680 0.5% 1/10W
R678	1-216-049-91	s	METAL, CHIP 1k 5% 1/10W
R679	1-216-661-11	s	METAL, CHIP 2.7k 0.5% 1/10W
R680	1-216-057-00	s	METAL, CHIP 2.2k 5% 1/10W
R681	1-216-045-00	s	METAL, CHIP 680 5% 1/10W
R682	1-216-639-11	s	METAL, CHIP 330 0.5% 1/10W
R683	1-216-651-11	s	METAL, CHIP 1k 0.5% 1/10W
R684	1-216-049-91	s	METAL, CHIP 1k 5% 1/10W
R685	1-216-025-91	s	METAL, CHIP 100 5% 1/10W
R686	1-216-025-91	s	METAL, CHIP 100 5% 1/10W
R687	1-216-081-00	s	METAL, CHIP 22k 5% 1/10W
R688	1-216-095-00	s	METAL, CHIP 82k 5% 1/10W
R689	1-216-624-11	s	METAL, CHIP 75 0.5% 1/10W
R690	1-216-073-00	s	METAL, CHIP 10k 5% 1/10W
R691	1-216-073-00	s	METAL, CHIP 10k 5% 1/10W
R692	1-208-785-11	s	METAL, CHIP 1.3k 0.5% 1/10W
R693	1-216-652-11	s	METAL, CHIP 1.1k 0.5% 1/10W
R694	1-216-666-11	s	METAL, CHIP 4.3k 0.5% 1/10W
*R695	1-216-295-91	s	RES, CHIP 0

(VP-44AP BOARD(for UVW-1400P, PAL))

Ref. No. or Q'ty	Part No.	SP	Description	
R701	1-216-025-91	s	METAL, CHIP 100 5% 1/10W	
R702	1-216-025-91	s	METAL, CHIP 100 5% 1/10W	
R703	1-216-049-91	s	METAL, CHIP 1k 5% 1/10W	
R704	1-216-049-91	s	METAL, CHIP 1k 5% 1/10W	
R705	1-216-049-91	s	METAL, CHIP 1k 5% 1/10W	
R706	1-216-049-91	s	METAL, CHIP 1k 5% 1/10W	
R707	1-208-784-11	s	METAL, CHIP 1.2k 0.5% 1/10W	
R708	1-208-784-11	s	METAL, CHIP 1.2k 0.5% 1/10W	
R709	1-216-065-00	s	METAL, CHIP 4.7k 5% 1/10W	
R710	1-216-065-00	s	METAL, CHIP 4.7k 5% 1/10W	
R711	1-216-025-91	s	METAL, CHIP 100 5% 1/10W	
R712	1-216-025-91	s	METAL, CHIP 100 5% 1/10W	
R713-718	1-216-049-91	s	METAL, CHIP 1k 5% 1/10W	
R719	1-216-037-00	s	METAL, CHIP 330 5% 1/10W	
R720	1-216-037-00	s	METAL, CHIP 330 5% 1/10W	
R721	1-216-025-91	s	METAL, CHIP 100 5% 1/10W	
R722	1-216-025-91	s	METAL, CHIP 100 5% 1/10W	
R723	1-216-025-91	s	METAL, CHIP 100 5% 1/10W	
R724	1-216-025-91	s	METAL, CHIP 100 5% 1/10W	
R725	1-216-065-00	s	METAL, CHIP 4.7k 5% 1/10W	
R726	1-216-065-00	s	METAL, CHIP 4.7k 5% 1/10W	
R727	1-216-065-00	s	METAL, CHIP 4.7k 5% 1/10W	
R728	1-216-065-00	s	METAL, CHIP 4.7k 5% 1/10W	
R729	1-216-041-00	s	METAL, CHIP 470 5% 1/10W	
R730	1-216-041-00	s	METAL, CHIP 470 5% 1/10W	
R731	1-216-049-91	s	METAL, CHIP 1k 5% 1/10W	
R732	1-216-049-91	s	METAL, CHIP 1k 5% 1/10W	
R733	1-208-800-11	s	METAL, CHIP 5.6k 0.5% 1/10W	
R734	1-216-659-11	s	METAL, CHIP 2.2k 0.5% 1/10W	
R735	1-216-057-00	s	METAL, CHIP 2.2k 5% 1/10W	
R736	1-208-800-11	s	METAL, CHIP 5.6k 0.5% 1/10W	
R737	1-216-659-11	s	METAL, CHIP 2.2k 0.5% 1/10W	
R738	1-216-055-00	s	METAL, CHIP 1.8k 5% 1/10W	
R739	1-216-017-91	s	METAL, CHIP 47 5% 1/10W	
R740	1-216-017-91	s	METAL, CHIP 47 5% 1/10W	
R741	1-208-774-11	s	METAL, CHIP 470 5% 1/10W	
R742	1-208-774-11	s	METAL, CHIP 470 5% 1/10W	
R743	1-208-784-11	s	METAL, CHIP 1.2k 0.5% 1/10W	
R744	1-208-774-11	s	METAL, CHIP 470 5% 1/10W	
R745	1-208-774-11	s	METAL, CHIP 470 5% 1/10W	
R746	1-208-784-11	s	METAL, CHIP 1.2k 0.5% 1/10W	
R747	1-208-774-11	s	METAL, CHIP 470 5% 1/10W	
R748	1-216-041-00	s	METAL, CHIP 470 5% 1/10W	
R749	1-216-663-11	s	METAL, CHIP 3.3k 0.5% 1/10W	
R750	1-216-663-11	s	METAL, CHIP 3.3k 0.5% 1/10W	
R751	1-216-651-11	s	METAL, CHIP 1k 0.5% 1/10W	
R752	1-216-651-11	s	METAL, CHIP 1k 0.5% 1/10W	
R755	1-216-639-11	s	METAL, CHIP 330 0.5% 1/10W	
R758	1-216-639-11	s	METAL, CHIP 330 0.5% 1/10W	
R759	1-216-065-00	s	METAL, CHIP 4.7k 5% 1/10W	
R760	1-216-065-00	s	METAL, CHIP 4.7k 5% 1/10W	
R761	1-216-624-11	s	METAL, CHIP 75 0.5% 1/10W	
R762	1-216-624-11	s	METAL, CHIP 75 0.5% 1/10W	
R763-768	1-216-097-91	s	METAL, CHIP 100k 5% 1/10W	
R769-775	1-216-049-91	s	METAL, CHIP 1k 5% 1/10W	
R776	1-216-113-00	s	METAL, CHIP 470k 5% 1/10W	
R777	1-216-049-91	s	METAL, CHIP 1k 5% 1/10W	
R778	1-216-049-91	s	METAL, CHIP 1k 5% 1/10W	
*R779	1-216-049-91	s	METAL, CHIP 1k 5% 1/10W	*9

Note: In this list * marked parts are design changed.
Refer to pages 18-29 to 18-31 for applicable serial numbers.

(VP-44AP BOARD(for UVW-1400P, PAL))

Ref. No. or Q'ty	Part No.	SP	Description
R780	1-216-097-91	s	METAL, CHIP 100k 5% 1/10W
R781	1-216-049-91	s	METAL, CHIP 1k 5% 1/10W
R782	1-216-097-91	s	METAL, CHIP 100k 5% 1/10W
R784	1-216-049-91	s	METAL, CHIP 1k 5% 1/10W
RV101	1-241-785-11	s	RES, ADJ METAL 10k
RV102	1-241-785-11	s	RES, ADJ METAL 10k
RV103	1-241-761-11	s	RES, ADJ METAL 1k
RV201	1-241-763-11	s	RES, ADJ METAL 4.7k
RV301	1-241-785-11	s	RES, ADJ METAL 10k
RV302	1-241-785-11	s	RES, ADJ METAL 10k
RV303	1-241-761-11	s	RES, ADJ METAL 1k
RV401	1-241-764-11	s	RES, ADJ METAL 10k
RV501	1-241-761-11	s	RES, ADJ METAL 1k
RV502	1-241-763-11	s	RES, ADJ METAL 4.7k
RV503	1-241-762-11	s	RES, ADJ METAL 2.2k
RV504	1-241-761-11	s	RES, ADJ METAL 1k
RV505	1-241-760-11	s	RES, ADJ METAL 470
RV506-511	1-241-761-11	s	RES, ADJ METAL 1k
RV512	1-241-758-11	s	RES, ADJ METAL 100
RV601	1-241-783-11	s	RES, ADJ METAL 2.2k
RV602	1-241-787-11	s	RES, ADJ METAL 47k
RV603	1-241-787-11	s	RES, ADJ METAL 47k
RV604	1-241-783-11	s	RES, ADJ METAL 2.2k
RV605	1-241-784-11	s	RES, ADJ METAL 4.7k
RV606	1-241-784-11	s	RES, ADJ METAL 4.7k
RV607	1-241-779-11	s	RES, ADJ METAL 100
RV701	1-241-783-11	s	RES, ADJ METAL 2.2k
RV702	1-241-783-11	s	RES, ADJ METAL 2.2k
RV703	1-241-761-11	s	RES, ADJ METAL 1k
RV704	1-241-761-11	s	RES, ADJ METAL 1k
RV705	1-241-763-11	s	RES, ADJ METAL 4.7k
RV706	1-241-763-11	s	RES, ADJ METAL 4.7k
RV707	1-241-760-11	s	RES, ADJ METAL 470
RV708	1-241-760-11	s	RES, ADJ METAL 470
RV709	1-241-761-11	s	RES, ADJ METAL 1k
RV710	1-241-761-11	s	RES, ADJ METAL 1k
TH201	1-807-972-11	s	THERMISTOR SV-1715 1.25k
TH401	1-807-972-11	s	THERMISTOR SV-1715 1.25k
TH601	1-807-972-11	s	THERMISTOR SV-1715 1.25k

VP-44P BOARD(for UVW-1200P, PAL)

Ref. No. or Q'ty	Part No.	SP	Description	
VP-44P board is used for UVW-1400P.				
1pc	A-8275-605-A	o	MOUNTED CIRCUIT BOARD, VP-44P	
1pc	3-182-386-02	o	PLATE, SHIELD (L), CARD	
1pc	7-621-759-45	s	SCREW, +PSW2.6x6	
1pc	3-179-084-01	s	LEVER (R), PC BOARD	
1pc	3-179-085-01	s	LEVER (L), PC BOARD	
*C51	1-163-033-91	s	CERAMIC, CHIP 0.022uF 50V	*9
C101	1-163-033-91	s	CERAMIC, CHIP 0.022uF 50V	
C102	1-163-033-91	s	CERAMIC, CHIP 0.022uF 50V	
C103	1-163-275-11	s	CERAMIC, CHIP 0.001uF 5% 50V	
C104	1-163-033-91	s	CERAMIC, CHIP 0.022uF 50V	
C105	1-163-033-91	s	CERAMIC, CHIP 0.022uF 50V	
C106	1-126-933-11	s	ELECT 100uF 20% 16V	
C107	1-163-033-91	s	CERAMIC, CHIP 0.022uF 50V	
C108	1-163-033-91	s	CERAMIC, CHIP 0.022uF 50V	
C109	1-163-108-00	s	CERAMIC, CHIP 43pF 5% 50V	
C110	1-163-249-11	s	CERAMIC, CHIP 82pF 5% 50V	
C111	1-163-108-00	s	CERAMIC, CHIP 43pF 5% 50V	
C112	1-124-903-11	s	ELECT 1uF 20% 50V	
C113	1-124-903-11	s	ELECT 1uF 20% 50V	
C114	1-163-275-11	s	CERAMIC, CHIP 0.001uF 5% 50V	
C115	1-163-033-91	s	CERAMIC, CHIP 0.022uF 50V	
C116	1-163-033-91	s	CERAMIC, CHIP 0.022uF 50V	
C117	1-163-033-91	s	CERAMIC, CHIP 0.022uF 50V	
C118	1-163-245-11	s	CERAMIC, CHIP 56pF 5% 50V	
C119	1-163-235-11	s	CERAMIC, CHIP 22pF 5% 50V	
C120-127	1-163-033-91	s	CERAMIC, CHIP 0.022uF 50V	
C128	1-163-133-00	s	CERAMIC, CHIP 470pF 5% 50V	
C129	1-163-033-91	s	CERAMIC, CHIP 0.022uF 50V	
C130	1-163-033-91	s	CERAMIC, CHIP 0.022uF 50V	
C131	1-126-933-11	s	ELECT 100uF 20% 16V	
C132	1-163-033-91	s	CERAMIC, CHIP 0.022uF 50V	
C133	1-163-113-00	s	CERAMIC, CHIP 68pF 5% 50V	
C134-142	1-163-033-91	s	CERAMIC, CHIP 0.022uF 50V	
C143	1-126-933-11	s	ELECT 100uF 20% 16V	
C144	1-126-933-11	s	ELECT 100uF 20% 16V	
C145	1-126-933-11	s	ELECT 100uF 20% 16V	
C146	1-126-933-11	s	ELECT 100uF 20% 16V	
C147	1-163-231-11	s	CERAMIC, CHIP 15pF 5% 50V	
C148	1-163-241-11	s	CERAMIC, CHIP 39pF 5% 50V	
C149	1-163-033-91	s	CERAMIC, CHIP 0.022uF 50V	
C150	1-126-933-11	s	ELECT 100uF 20% 16V	
C151	1-163-229-11	s	CERAMIC, CHIP 12pF 5% 50V	
C201-205	1-163-033-91	s	CERAMIC, CHIP 0.022uF 50V	
C207-212	1-163-033-91	s	CERAMIC, CHIP 0.022uF 50V	
C213	1-163-222-11	s	CERAMIC, CHIP 5pF 50V	
C214	1-163-222-11	s	CERAMIC, CHIP 5pF 50V	
C215	1-126-925-11	s	ELECT 470uF 20% 10V	
C216	1-163-033-91	s	CERAMIC, CHIP 0.022uF 50V	
C217	1-163-033-91	s	CERAMIC, CHIP 0.022uF 50V	
C218	1-163-033-91	s	CERAMIC, CHIP 0.022uF 50V	
C219	1-163-222-11	s	CERAMIC, CHIP 5pF 50V	
C220	1-164-161-11	s	CERAMIC, CHIP 0.0022uF 10% 100V	
C221	1-163-091-00	s	CERAMIC, CHIP 8pF 50V	
C222	1-163-033-91	s	CERAMIC, CHIP 0.022uF 50V	
C223	1-163-033-91	s	CERAMIC, CHIP 0.022uF 50V	
C224	1-126-925-11	s	ELECT 470uF 20% 10V	
C225	1-126-925-11	s	ELECT 470uF 20% 10V	

Note: In this list * marked parts are design changed.
Refer to pages 18-29 to 18-31 for applicable serial numbers.

(VP-44P BOARD(for UVW-1200P, PAL))

Ref. No. or Q'ty	Part No.	SP	Description
C226-230	1-163-033-91	s	CERAMIC, CHIP 0.022uF 50V
C231	1-126-925-11	s	ELECT 470uF 20% 10V
C232	1-163-033-91	s	CERAMIC, CHIP 0.022uF 50V
C234	1-107-552-11	s	MICA, CHIP 150pF 1% 50V
C235	1-126-933-11	s	ELECT 100uF 20% 16V
C236	1-163-033-91	s	CERAMIC, CHIP 0.022uF 50V
C237	1-126-963-11	s	ELECT 4.7uF 20% 50V
C238	1-163-235-11	s	CERAMIC, CHIP 22pF 5% 50V
C239	1-163-114-00	s	CERAMIC, CHIP 75pF 5% 50V
C240	1-163-033-91	s	CERAMIC, CHIP 0.022uF 50V
C241	1-163-241-11	s	CERAMIC, CHIP 39pF 5% 50V
C242	1-163-033-91	s	CERAMIC, CHIP 0.022uF 50V
C243	1-163-033-91	s	CERAMIC, CHIP 0.022uF 50V
C244	1-163-033-91	s	CERAMIC, CHIP 0.022uF 50V
C245	1-126-925-11	s	ELECT 470uF 20% 10V
C246	1-126-933-11	s	ELECT 100uF 20% 16V
C247	1-163-033-91	s	CERAMIC, CHIP 0.022uF 50V
C248	1-163-033-91	s	CERAMIC, CHIP 0.022uF 50V
C249	1-126-933-11	s	ELECT 100uF 20% 16V
C250	1-126-933-11	s	ELECT 100uF 20% 16V
C251	1-126-964-11	s	ELECT 10uF 20% 50V
C252	1-163-243-11	s	CERAMIC, CHIP 47pF 5% 50V
C253	1-163-033-91	s	CERAMIC, CHIP 0.022uF 50V
C301	1-163-033-91	s	CERAMIC, CHIP 0.022uF 50V
C302	1-163-033-91	s	CERAMIC, CHIP 0.022uF 50V
C303	1-163-275-11	s	CERAMIC, CHIP 0.001uF 5% 50V
C304	1-163-033-91	s	CERAMIC, CHIP 0.022uF 50V
C305	1-126-933-11	s	ELECT 100uF 20% 16V
C306	1-163-033-91	s	CERAMIC, CHIP 0.022uF 50V
C307	1-163-033-91	s	CERAMIC, CHIP 0.022uF 50V
C308	1-163-033-91	s	CERAMIC, CHIP 0.022uF 50V
C309	1-163-110-00	s	CERAMIC, CHIP 51pF 5% 50V
C310	1-163-251-11	s	CERAMIC, CHIP 100pF 5% 50V
C311	1-163-110-00	s	CERAMIC, CHIP 51pF 5% 50V
C312	1-124-903-11	s	ELECT 1uF 20% 50V
C313	1-124-903-11	s	ELECT 1uF 20% 50V
C314	1-163-275-11	s	CERAMIC, CHIP 0.001uF 5% 50V
C315	1-163-135-00	s	CERAMIC, CHIP 560pF 5% 50V
C316	1-163-257-11	s	CERAMIC, CHIP 180pF 5% 50V
C317	1-163-033-91	s	CERAMIC, CHIP 0.022uF 50V
C318	1-163-033-91	s	CERAMIC, CHIP 0.022uF 50V
C319	1-163-113-00	s	CERAMIC, CHIP 68pF 5% 50V
C320	1-163-033-91	s	CERAMIC, CHIP 0.022uF 50V
C321	1-163-033-91	s	CERAMIC, CHIP 0.022uF 50V
C322	1-163-235-11	s	CERAMIC, CHIP 22pF 5% 50V
C323	1-163-033-91	s	CERAMIC, CHIP 0.022uF 50V
C324	1-163-033-91	s	CERAMIC, CHIP 0.022uF 50V
C325	1-163-033-91	s	CERAMIC, CHIP 0.022uF 50V
C326	1-163-033-91	s	CERAMIC, CHIP 0.022uF 50V
C327	1-163-133-00	s	CERAMIC, CHIP 470pF 5% 50V
C328	1-163-033-91	s	CERAMIC, CHIP 0.022uF 50V
C329	1-163-033-91	s	CERAMIC, CHIP 0.022uF 50V
C330	1-163-033-91	s	CERAMIC, CHIP 0.022uF 50V
C331	1-163-033-91	s	CERAMIC, CHIP 0.022uF 50V
C332	1-126-933-11	s	ELECT 100uF 20% 16V
C333	1-163-033-91	s	CERAMIC, CHIP 0.022uF 50V
C334	1-163-251-11	s	CERAMIC, CHIP 100pF 5% 50V
C335-339	1-163-033-91	s	CERAMIC, CHIP 0.022uF 50V
C340	1-126-933-11	s	ELECT 100uF 20% 16V

(VP-44P BOARD(for UVW-1200P, PAL))

Ref. No. or Q'ty	Part No.	SP	Description
C341	1-163-033-91	s	CERAMIC, CHIP 0.022uF 50V
C342	1-163-033-91	s	CERAMIC, CHIP 0.022uF 50V
C343	1-126-933-11	s	ELECT 100uF 20% 16V
C344	1-163-033-91	s	CERAMIC, CHIP 0.022uF 50V
C345	1-163-033-91	s	CERAMIC, CHIP 0.022uF 50V
C346	1-163-231-11	s	CERAMIC, CHIP 15pF 5% 50V
C347	1-126-933-11	s	ELECT 100uF 20% 16V
C348	1-126-933-11	s	ELECT 100uF 20% 16V
C349	1-163-241-11	s	CERAMIC, CHIP 39pF 5% 50V
C350	1-163-033-91	s	CERAMIC, CHIP 0.022uF 50V
C351	1-126-933-11	s	ELECT 100uF 20% 16V
C401-408	1-163-033-91	s	CERAMIC, CHIP 0.022uF 50V
C409	1-126-925-11	s	ELECT 470uF 20% 10V
C410	1-163-033-91	s	CERAMIC, CHIP 0.022uF 50V
C411	1-163-033-91	s	CERAMIC, CHIP 0.022uF 50V
C412	1-163-222-11	s	CERAMIC, CHIP 5pF 50V
C413	1-163-222-11	s	CERAMIC, CHIP 5pF 50V
C414	1-163-033-91	s	CERAMIC, CHIP 0.022uF 50V
C415	1-164-161-11	s	CERAMIC, CHIP 0.0022uF 10% 100V
C416	1-163-222-11	s	CERAMIC, CHIP 5pF 50V
C417	1-163-033-91	s	CERAMIC, CHIP 0.022uF 50V
C418	1-163-033-91	s	CERAMIC, CHIP 0.022uF 50V
C419	1-126-925-11	s	ELECT 470uF 20% 10V
C420	1-126-925-11	s	ELECT 470uF 20% 10V
C421-425	1-163-033-91	s	CERAMIC, CHIP 0.022uF 50V
C426	1-126-933-11	s	ELECT 100uF 20% 16V
C427	1-126-925-11	s	ELECT 470uF 20% 10V
C428	1-163-033-91	s	CERAMIC, CHIP 0.022uF 50V
C429	1-163-222-11	s	CERAMIC, CHIP 5pF 50V
C430	1-107-552-11	s	MICA, CHIP 150pF 1% 50V
C431	1-163-033-91	s	CERAMIC, CHIP 0.022uF 50V
C432	1-126-963-11	s	ELECT 4.7uF 20% 50V
C433	1-163-239-11	s	CERAMIC, CHIP 33pF 5% 50V
C434	1-163-033-91	s	CERAMIC, CHIP 0.022uF 50V
C435	1-163-033-91	s	CERAMIC, CHIP 0.022uF 50V
C436	1-163-251-11	s	CERAMIC, CHIP 100pF 5% 50V
C437	1-126-925-11	s	ELECT 470uF 20% 10V
C438	1-126-933-11	s	ELECT 100uF 20% 16V
C439	1-163-033-91	s	CERAMIC, CHIP 0.022uF 50V
C440	1-163-033-91	s	CERAMIC, CHIP 0.022uF 50V
C441	1-163-033-91	s	CERAMIC, CHIP 0.022uF 50V
C442	1-126-933-11	s	ELECT 100uF 20% 16V
C443	1-126-933-11	s	ELECT 100uF 20% 16V
C502	1-163-033-91	s	CERAMIC, CHIP 0.022uF 50V
C503	1-126-933-11	s	ELECT 100uF 20% 16V
C504	1-126-933-11	s	ELECT 100uF 20% 16V
C505	1-163-033-91	s	CERAMIC, CHIP 0.022uF 50V
C506	1-163-033-91	s	CERAMIC, CHIP 0.022uF 50V
C507	1-163-033-91	s	CERAMIC, CHIP 0.022uF 50V
C508	1-163-033-91	s	CERAMIC, CHIP 0.022uF 50V
C509	1-163-227-11	s	CERAMIC, CHIP 10pF 5% 50V
C510	1-163-251-11	s	CERAMIC, CHIP 100pF 5% 50V
C511	1-163-251-11	s	CERAMIC, CHIP 100pF 5% 50V
C512	1-131-353-00	s	TANTALUM 10uF 10% 35V
C513	1-131-353-00	s	TANTALUM 10uF 10% 35V
C514	1-163-033-91	s	CERAMIC, CHIP 0.022uF 50V
C515	1-130-491-00	s	MYLAR 0.047uF 5% 50V
C516	1-163-033-91	s	CERAMIC, CHIP 0.022uF 50V
C517	1-163-033-91	s	CERAMIC, CHIP 0.022uF 50V

Note: In this list * marked parts are design changed.
Refer to pages 18-29 to 18-31 for applicable serial numbers.

(VP-44P BOARD(for UVW-1200P, PAL))

Ref. No. or Q'ty	Part No.	SP	Description	
C518	1-163-227-11	s	CERAMIC, CHIP 10pF 5% 50V	
C519	1-163-235-11	s	CERAMIC, CHIP 22pF 5% 50V	
C520-526	1-163-033-91	s	CERAMIC, CHIP 0.022uF 50V	
C527	1-126-933-11	s	ELECT 100uF 20% 16V	
C528	1-163-033-91	s	CERAMIC, CHIP 0.022uF 50V	
C529	1-163-033-91	s	CERAMIC, CHIP 0.022uF 50V	
C530	1-163-033-91	s	CERAMIC, CHIP 0.022uF 50V	
C531	1-163-222-11	s	CERAMIC, CHIP 5pF 50V	
C532	1-131-353-00	s	TANTALUM 10uF 10% 35V	
C533	1-131-353-00	s	TANTALUM 10uF 10% 35V	
C534	1-126-933-11	s	ELECT 100uF 20% 16V	
C535	1-163-033-91	s	CERAMIC, CHIP 0.022uF 50V	
C536	1-163-033-91	s	CERAMIC, CHIP 0.022uF 50V	
C537	1-130-491-00	s	MYLAR 0.047uF 5% 50V	
C538	1-163-033-91	s	CERAMIC, CHIP 0.022uF 50V	
C539	1-163-227-11	s	CERAMIC, CHIP 10pF 5% 50V	
C540	1-163-033-91	s	CERAMIC, CHIP 0.022uF 50V	
C541	1-163-237-11	s	CERAMIC, CHIP 27pF 5% 50V	
C542	1-163-033-91	s	CERAMIC, CHIP 0.022uF 50V	
C543	1-163-033-91	s	CERAMIC, CHIP 0.022uF 50V	
C544	1-163-033-91	s	CERAMIC, CHIP 0.022uF 50V	
C545	1-163-033-91	s	CERAMIC, CHIP 0.022uF 50V	
C546	1-163-227-11	s	CERAMIC, CHIP 10pF 5% 50V	
C547	1-163-243-11	s	CERAMIC, CHIP 47pF 5% 50V	
C548	1-163-033-91	s	CERAMIC, CHIP 0.022uF 50V	
C549	1-163-033-91	s	CERAMIC, CHIP 0.022uF 50V	
C550	1-163-033-91	s	CERAMIC, CHIP 0.022uF 50V	
C551	1-163-222-11	s	CERAMIC, CHIP 5pF 50V	
C552-556	1-163-033-91	s	CERAMIC, CHIP 0.022uF 50V	
C557	1-126-925-11	s	ELECT 470uF 20% 10V	
C558	1-126-925-11	s	ELECT 470uF 20% 10V	
C559	1-163-033-91	s	CERAMIC, CHIP 0.022uF 50V	
C560	1-163-033-91	s	CERAMIC, CHIP 0.022uF 50V	
C561	1-126-933-11	s	ELECT 100uF 20% 16V	
C562	1-126-933-11	s	ELECT 100uF 20% 16V	
C563	1-126-933-11	s	ELECT 100uF 20% 16V	
C601	1-126-933-11	s	ELECT 100uF 20% 16V	
C602	1-126-933-11	s	ELECT 100uF 20% 16V	
C603-608	1-163-033-91	s	CERAMIC, CHIP 0.022uF 50V	
C609	1-126-933-11	s	ELECT 100uF 20% 16V	
C610	1-126-933-11	s	ELECT 100uF 20% 16V	
C613	1-163-033-91	s	CERAMIC, CHIP 0.022uF 50V	
C614	1-163-033-91	s	CERAMIC, CHIP 0.022uF 50V	
C615	1-126-933-11	s	ELECT 100uF 20% 16V	
C616	1-126-933-11	s	ELECT 100uF 20% 16V	
C617	1-163-033-91	s	CERAMIC, CHIP 0.022uF 50V	
C618	1-163-033-91	s	CERAMIC, CHIP 0.022uF 50V	
C619	1-131-347-00	s	TANTALUM 1uF 10% 35V	
C620	1-131-347-00	s	TANTALUM 1uF 10% 35V	
C621	1-131-347-00	s	TANTALUM 1uF 10% 35V	
C622	1-131-347-00	s	TANTALUM 1uF 10% 35V	
C623	1-163-033-91	s	CERAMIC, CHIP 0.022uF 50V	
C624	1-163-033-91	s	CERAMIC, CHIP 0.022uF 50V	
C625	1-163-033-91	s	CERAMIC, CHIP 0.022uF 50V	
C626	1-130-491-00	s	MYLAR 0.047uF 5% 50V	
C627	1-130-491-00	s	MYLAR 0.047uF 5% 50V	
C628	1-163-033-91	s	CERAMIC, CHIP 0.022uF 50V	
C629	1-163-227-11	s	CERAMIC, CHIP 10pF 5% 50V	
C630	1-163-033-91	s	CERAMIC, CHIP 0.022uF 50V	

(VP-44P BOARD(for UVW-1200P, PAL))

Ref. No. or Q'ty	Part No.	SP	Description	
C631	1-126-964-11	s	ELECT 10uF 20% 50V	
C632-639	1-163-033-91	s	CERAMIC, CHIP 0.022uF 50V	
C640	1-126-933-11	s	ELECT 100uF 20% 16V	
C641	1-163-033-91	s	CERAMIC, CHIP 0.022uF 50V	
*C642	1-216-295-00	s	METAL, CHIP 0	*8
C643	1-163-243-11	s	CERAMIC, CHIP 47pF 5% 50V	
C644	1-163-227-11	s	CERAMIC, CHIP 10pF 5% 50V	
C645	1-163-033-91	s	CERAMIC, CHIP 0.022uF 50V	
C646	1-163-033-91	s	CERAMIC, CHIP 0.022uF 50V	
C647	1-163-087-00	s	CERAMIC, CHIP 4pF 50V	
C648	1-163-227-11	s	CERAMIC, CHIP 10pF 5% 50V	
C649	1-163-033-91	s	CERAMIC, CHIP 0.022uF 50V	
C650	1-163-033-91	s	CERAMIC, CHIP 0.022uF 50V	
C651	1-163-033-91	s	CERAMIC, CHIP 0.022uF 50V	
C652	1-163-033-91	s	CERAMIC, CHIP 0.022uF 50V	
C653	1-126-933-11	s	ELECT 100uF 20% 16V	
C654	1-163-227-11	s	CERAMIC, CHIP 10pF 5% 50V	
C701	1-126-933-11	s	ELECT 100uF 20% 16V	
C702	1-126-933-11	s	ELECT 100uF 20% 16V	
C703	1-163-033-91	s	CERAMIC, CHIP 0.022uF 50V	
C704	1-163-033-91	s	CERAMIC, CHIP 0.022uF 50V	
C705	1-163-231-11	s	CERAMIC, CHIP 15pF 5% 50V	
C706	1-163-231-11	s	CERAMIC, CHIP 15pF 5% 50V	
C707	1-163-243-11	s	CERAMIC, CHIP 47pF 5% 50V	
C708	1-163-243-11	s	CERAMIC, CHIP 47pF 5% 50V	
C709	1-163-227-11	s	CERAMIC, CHIP 10pF 5% 50V	
C710	1-163-227-11	s	CERAMIC, CHIP 10pF 5% 50V	
C711	1-163-237-11	s	CERAMIC, CHIP 27pF 5% 50V	
C712	1-163-237-11	s	CERAMIC, CHIP 27pF 5% 50V	
C713-725	1-163-033-91	s	CERAMIC, CHIP 0.022uF 50V	
C726-730	1-126-933-11	s	ELECT 100uF 20% 16V	
C731	1-131-353-00	s	TANTALUM 10uF 10% 35V	
C732	1-163-033-91	s	CERAMIC, CHIP 0.022uF 50V	
C733	1-163-033-91	s	CERAMIC, CHIP 0.022uF 50V	
C734	1-163-033-91	s	CERAMIC, CHIP 0.022uF 50V	
C735	1-163-033-91	s	CERAMIC, CHIP 0.022uF 50V	
C736	1-130-487-00	s	MYLAR 0.022uF 5% 50V	
C737	1-163-033-91	s	CERAMIC, CHIP 0.022uF 50V	
C738	1-163-033-91	s	CERAMIC, CHIP 0.022uF 50V	
C739	1-163-033-91	s	CERAMIC, CHIP 0.022uF 50V	
C740	1-126-933-11	s	ELECT 100uF 20% 16V	
C741	1-126-933-11	s	ELECT 100uF 20% 16V	
CN103	1-573-782-21	o	CONNECTOR, PHEC 60P, MALE	
*CN104	1-573-782-21	o	CONNECTOR, PHEC 60P, MALE	*9
CN105	1-506-491-11	s	CONNECTOR 12P, MALE	
*CN601	1-573-782-21	o	CONNECTOR, PHEC 60P, MALE	*8
D201	8-719-123-82	s	DIODE 1SS303-T1	
D401	8-719-123-82	s	DIODE 1SS303-T1	
D501	8-719-123-82	s	DIODE 1SS303-T1	
D502	8-719-941-04	s	DIODE SB007-03CP	
D503	8-719-021-31	s	DIODE UZM5.1B	
D504	8-719-123-82	s	DIODE 1SS303-T1	
D601	8-719-941-04	s	DIODE SB007-03CP	
D701	8-719-123-82	s	DIODE 1SS303-T1	
DL101	1-415-674-11	s	DELAY LINE	
DL301	1-415-546-11	s	DELAY LINE 50nS	
FL201	1-239-819-11	s	FILTER, LOW-PASS	

Note: In this list * marked parts are design changed.
Refer to pages 18-29 to 18-31 for applicable serial numbers.

(VP-44P BOARD(for UVW-1200P, PAL))

Ref. No. or Q'ty	Part No.	SP	Description	
FL401	1-239-772-11	s	FILTER, LOW-PASS 3MHz	
FL601	1-239-771-11	s	FILTER, LOW-PASS 6MHz	
IC101	8-752-052-75	s	IC CXA1479Q	
IC102	8-759-300-71	s	IC HD14053BFP	
IC103	8-759-908-92	s	IC TL084CNS	
IC104	8-759-702-08	s	IC NJM360M	
IC202	8-752-052-48	s	IC CXA1370Q	
IC203	8-759-700-65	s	IC NJM79L05A	
IC204	1-810-333-11	s	HIC BP-022	
IC205	8-759-189-43	s	IC AN77L05-TA	
IC301	8-752-052-75	s	IC CXA1479Q	
IC302	8-759-300-71	s	IC HD14053BFP	
IC303	8-759-908-92	s	IC TL084CNS	
IC401	8-752-052-48	s	IC CXA1370Q	
IC402	8-759-700-65	s	IC NJM79L05A	
IC403	1-810-333-11	s	HIC BP-022	
IC404	8-759-189-43	s	IC AN77L05-TA	
IC501	8-759-907-81	s	IC SN74LS221NS	
IC502	8-759-908-92	s	IC TL084CNS	
IC504	8-759-168-20	s	IC TA78L09S	
IC505	8-759-700-65	s	IC NJM79L05A	
IC506	8-759-908-92	s	IC TL084CNS	
IC507	8-752-052-73	s	IC CXA1451M	
IC508	8-752-052-73	s	IC CXA1451M	
IC509	8-752-052-73	s	IC CXA1451M	
IC510	8-752-052-73	s	IC CXA1451M	
IC511	8-759-927-46	s	IC SN74HC00ANS	
IC512	8-759-182-84	s	IC PQ05SZ5U	
IC513	8-759-822-95	s	IC L79M05T-FA	
IC514	8-759-300-71	s	IC HD14053BFP	
*IC515	8-759-300-71	s	IC HD14053BFP	*9
IC516	8-759-700-65	s	IC NJM79L05A	
IC601	8-759-981-48	s	IC NJM082M	
IC602	8-759-908-92	s	IC TL084CNS	
IC603	8-759-300-71	s	IC HD14053BFP	
IC604	8-759-908-92	s	IC TL084CNS	
IC605	8-752-054-80	s	IC CXA1521M	
IC606	8-752-054-80	s	IC CXA1521M	
IC607	8-759-168-20	s	IC TA78L09S	
IC608	8-759-906-59	s	IC CX22017	
IC610	8-759-700-65	s	IC NJM79L05A	
IC612	8-752-052-73	s	IC CXA1451M	
IC613	8-759-262-00	s	IC MC14576CF	
IC701	8-752-052-73	s	IC CXA1451M	
IC702	8-752-052-73	s	IC CXA1451M	
IC703	8-759-927-46	s	IC SN74HC00ANS	
IC704	8-759-925-74	s	IC TC74HC04ANS	
IC705	8-759-925-85	s	IC SN74HC32ANS	
IC706	8-759-189-43	s	IC AN77L05-TA	
IC707	8-759-700-65	s	IC NJM79L05A	
IC708	8-759-168-20	s	IC TA78L09S	
L101	1-410-482-31	s	INDUCTOR 100uH	
L102	1-410-466-41	s	INDUCTOR 4.7uH	
L103	1-410-466-41	s	INDUCTOR 4.7uH	
L104	1-410-466-41	s	INDUCTOR 4.7uH	
L105	1-410-482-31	s	INDUCTOR 100uH	
L106	1-410-462-11	s	INDUCTOR 2.2uH	
L107	1-410-482-31	s	INDUCTOR 100uH	

(VP-44P BOARD(for UVW-1200P, PAL))

Ref. No. or Q'ty	Part No.	SP	Description	
L108	1-410-482-31	s	INDUCTOR 100uH	
L109	1-408-621-31	s	INDUCTOR 330uH	
L110	1-410-482-31	s	INDUCTOR 100uH	
L111	1-410-466-41	s	INDUCTOR 4.7uH	
L201	1-410-471-11	s	INDUCTOR 12uH	
L202	1-410-482-31	s	INDUCTOR 100uH	
L203	1-410-468-11	s	INDUCTOR 6.8uH	
L204	1-410-476-11	s	INDUCTOR 33uH	
L205	1-410-482-31	s	INDUCTOR 100uH	
L206	1-410-482-31	s	INDUCTOR 100uH	
L207	1-410-482-31	s	INDUCTOR 100uH	
L208	1-408-617-31	s	INDUCTOR 150uH	
L301	1-410-482-31	s	INDUCTOR 100uH	
L302	1-410-468-11	s	INDUCTOR 6.8uH	
L303	1-410-468-11	s	INDUCTOR 6.8uH	
L304	1-408-429-00	s	INDUCTOR 470uH	
L305	1-408-429-00	s	INDUCTOR 470uH	
L306	1-408-406-00	s	INDUCTOR 5.6uH	
L307	1-410-482-31	s	INDUCTOR 100uH	
L308	1-410-462-11	s	INDUCTOR 2.2uH	
L309	1-408-621-31	s	INDUCTOR 330uH	
L310	1-410-482-31	s	INDUCTOR 100uH	
L311	1-410-482-31	s	INDUCTOR 100uH	
L312	1-410-482-31	s	INDUCTOR 100uH	
L401	1-410-471-11	s	INDUCTOR 12uH	
L402	1-410-482-31	s	INDUCTOR 100uH	
L403	1-408-408-00	s	INDUCTOR 8.2uH	
L404	1-410-482-31	s	INDUCTOR 100uH	
L405	1-410-482-31	s	INDUCTOR 100uH	
L406	1-410-482-31	s	INDUCTOR 100uH	
L501	1-410-482-31	s	INDUCTOR 100uH	
L503	1-410-482-31	s	INDUCTOR 100uH	
L504	1-410-482-31	s	INDUCTOR 100uH	
L505	1-410-478-11	s	INDUCTOR 47uH	
L506	1-410-476-11	s	INDUCTOR 33uH	
L507	1-410-482-31	s	INDUCTOR 100uH	
L601-606	1-410-482-31	s	INDUCTOR 100uH	
L607	1-408-413-00	s	INDUCTOR 22uH	
L608	1-408-413-00	s	INDUCTOR 22uH	
L702	1-410-482-31	s	INDUCTOR 100uH	
L703	1-410-476-11	s	INDUCTOR 33uH	
L704	1-410-476-11	s	INDUCTOR 33uH	
L706-710	1-412-533-21	s	INDUCTOR 47uH	
*Q51	8-729-904-41	s	TRANSISTOR FMY3	*44
Q101	8-729-117-32	s	TRANSISTOR 2SC4177	
Q102	8-729-117-72	s	TRANSISTOR 2SC4178	
Q103	8-729-143-07	s	TRANSISTOR 2SA1610-YY33	
Q104	8-729-117-72	s	TRANSISTOR 2SC4178	
Q105	8-729-117-72	s	TRANSISTOR 2SC4178	
Q106	8-729-143-07	s	TRANSISTOR 2SA1610-YY33	
Q107-111	8-729-117-72	s	TRANSISTOR 2SC4178	
Q112	8-729-905-18	s	TRANSISTOR DTC144EU	
Q201	8-729-117-72	s	TRANSISTOR 2SC4178	
Q202	8-729-143-07	s	TRANSISTOR 2SA1610-YY33	
Q203	8-729-117-72	s	TRANSISTOR 2SC4178	
Q204	8-729-117-72	s	TRANSISTOR 2SC4178	
Q205	8-729-143-07	s	TRANSISTOR 2SA1610-YY33	
Q206	8-729-143-07	s	TRANSISTOR 2SA1610-YY33	

Note: In this list * marked parts are design changed.
Refer to pages 18-29 to 18-31 for applicable serial numbers.

(VP-44P BOARD(for UVW-1200P, PAL))

Ref. No. or Q'ty	Part No.	SP	Description
Q207	8-729-117-72	s	TRANSISTOR 2SC4178
Q208	8-729-143-07	s	TRANSISTOR 2SA1610-YY33
Q209	8-729-143-07	s	TRANSISTOR 2SA1610-YY33
Q210	8-729-117-72	s	TRANSISTOR 2SC4178
Q211	8-729-117-72	s	TRANSISTOR 2SC4178
Q212	8-729-117-72	s	TRANSISTOR 2SC4178
Q213	8-729-143-07	s	TRANSISTOR 2SA1610-YY33
Q214	8-729-143-07	s	TRANSISTOR 2SA1610-YY33
Q215	8-729-117-72	s	TRANSISTOR 2SC4178
Q216	8-729-905-12	s	TRANSISTOR DTA144EU
Q217	8-729-117-72	s	TRANSISTOR 2SC4178
Q218	8-729-143-07	s	TRANSISTOR 2SA1610-YY33
Q219	8-729-117-72	s	TRANSISTOR 2SC4178
Q220	8-729-143-07	s	TRANSISTOR 2SA1610-YY33
Q301	8-729-117-32	s	TRANSISTOR 2SC4177
Q302	8-729-117-72	s	TRANSISTOR 2SC4178
Q303	8-729-117-72	s	TRANSISTOR 2SC4178
Q304	8-729-143-07	s	TRANSISTOR 2SA1610-YY33
Q305	8-729-117-72	s	TRANSISTOR 2SC4178
Q306	8-729-143-07	s	TRANSISTOR 2SA1610-YY33
Q307-311	8-729-117-72	s	TRANSISTOR 2SC4178
Q401	8-729-117-72	s	TRANSISTOR 2SC4178
Q402	8-729-143-07	s	TRANSISTOR 2SA1610-YY33
Q403	8-729-117-72	s	TRANSISTOR 2SC4178
Q404	8-729-117-72	s	TRANSISTOR 2SC4178
Q405	8-729-143-07	s	TRANSISTOR 2SA1610-YY33
Q406	8-729-143-07	s	TRANSISTOR 2SA1610-YY33
Q407	8-729-117-72	s	TRANSISTOR 2SC4178
Q408	8-729-117-72	s	TRANSISTOR 2SC4178
Q409	8-729-117-72	s	TRANSISTOR 2SC4178
Q410	8-729-117-72	s	TRANSISTOR 2SC4178
Q411	8-729-143-07	s	TRANSISTOR 2SA1610-YY33
Q412	8-729-143-07	s	TRANSISTOR 2SA1610-YY33
Q413	8-729-117-72	s	TRANSISTOR 2SC4178
Q414	8-729-143-07	s	TRANSISTOR 2SA1610-YY33
Q415	8-729-143-07	s	TRANSISTOR 2SA1610-YY33
Q416	8-729-905-12	s	TRANSISTOR DTA144EU
Q417	8-729-117-72	s	TRANSISTOR 2SC4178
Q418	8-729-143-07	s	TRANSISTOR 2SA1610-YY33
Q501	8-729-117-32	s	TRANSISTOR 2SC4177
Q502	8-729-923-06	s	TRANSISTOR FMW8
Q503	8-729-904-04	s	TRANSISTOR FMS2
Q504	8-729-903-82	s	TRANSISTOR FMW2
Q505	8-729-931-46	s	TRANSISTOR FMW7
Q506	8-729-907-26	s	TRANSISTOR IMX1
Q507	8-729-904-41	s	TRANSISTOR FMY3
Q508	8-729-117-32	s	TRANSISTOR 2SC4177
Q509	8-729-117-32	s	TRANSISTOR 2SC4177
Q510	8-729-117-32	s	TRANSISTOR 2SC4177
Q511	8-729-907-26	s	TRANSISTOR IMX1
Q512	8-729-117-32	s	TRANSISTOR 2SC4177
Q513	8-729-117-32	s	TRANSISTOR 2SC4177
Q514	8-729-117-32	s	TRANSISTOR 2SC4177
Q515	8-729-907-26	s	TRANSISTOR IMX1
Q516	8-729-117-32	s	TRANSISTOR 2SC4177
Q517	8-729-117-32	s	TRANSISTOR 2SC4177
Q518	8-729-140-63	s	TRANSISTOR 2SA1611-M5M6
Q519	8-729-143-14	s	TRANSISTOR 2SC4176-B35
Q520	8-729-117-32	s	TRANSISTOR 2SC4177

(VP-44P BOARD(for UVW-1200P, PAL))

Ref. No. or Q'ty	Part No.	SP	Description	
Q521	8-729-904-41	s	TRANSISTOR FMY3	
Q522	8-729-904-41	s	TRANSISTOR FMY3	
Q523	8-729-904-41	s	TRANSISTOR FMY3	
Q601	8-729-117-32	s	TRANSISTOR 2SC4177	
Q602	8-729-117-32	s	TRANSISTOR 2SC4177	
Q603	8-729-923-06	s	TRANSISTOR FMW8	
Q604	8-729-923-06	s	TRANSISTOR FMW8	
Q605	8-729-904-04	s	TRANSISTOR FMS2	
Q606	8-729-904-04	s	TRANSISTOR FMS2	
Q607	8-729-903-82	s	TRANSISTOR FMW2	
Q608	8-729-903-82	s	TRANSISTOR FMW2	
Q609	8-729-907-26	s	TRANSISTOR IMX1	
Q610	8-729-907-26	s	TRANSISTOR IMX1	
Q611	8-729-931-46	s	TRANSISTOR FMW7	
Q612	8-729-931-46	s	TRANSISTOR FMW7	
Q613	8-729-140-63	s	TRANSISTOR 2SA1611-M5M6	
Q614-622	8-729-117-32	s	TRANSISTOR 2SC4177	
Q623	8-729-143-14	s	TRANSISTOR 2SC4176-B35	
Q624	8-729-117-32	s	TRANSISTOR 2SC4177	
Q701	8-729-117-32	s	TRANSISTOR 2SC4177	
Q702	8-729-117-32	s	TRANSISTOR 2SC4177	
Q703	8-729-140-63	s	TRANSISTOR 2SA1611-M5M6	
Q704	8-729-140-63	s	TRANSISTOR 2SA1611-M5M6	
Q705	8-729-117-32	s	TRANSISTOR 2SC4177	
Q706	8-729-117-32	s	TRANSISTOR 2SC4177	
Q707	8-729-117-32	s	TRANSISTOR 2SC4177	
Q708	8-729-117-32	s	TRANSISTOR 2SC4177	
Q709	8-729-422-44	s	TRANSISTOR 2SK663	
Q710	8-729-422-44	s	TRANSISTOR 2SK663	
Q711	8-729-422-44	s	TRANSISTOR 2SK663	
Q712	8-729-422-44	s	TRANSISTOR 2SK663	
Q713	8-729-140-63	s	TRANSISTOR 2SA1611-M5M6	
Q714	8-729-140-63	s	TRANSISTOR 2SA1611-M5M6	
Q715	8-729-140-63	s	TRANSISTOR 2SA1611-M5M6	
Q716	8-729-140-63	s	TRANSISTOR 2SA1611-M5M6	
Q717	8-729-117-32	s	TRANSISTOR 2SC4177	
Q718	8-729-907-26	s	TRANSISTOR IMX1	
Q719	8-729-907-26	s	TRANSISTOR IMX1	
Q720	8-729-117-32	s	TRANSISTOR 2SC4177	
Q721	8-729-117-32	s	TRANSISTOR 2SC4177	
Q722	8-729-907-26	s	TRANSISTOR IMX1	
Q723	8-729-907-26	s	TRANSISTOR IMX1	
Q724	8-729-117-32	s	TRANSISTOR 2SC4177	
Q725	8-729-117-32	s	TRANSISTOR 2SC4177	
Q726	8-729-140-63	s	TRANSISTOR 2SA1611-M5M6	
Q727	8-729-140-63	s	TRANSISTOR 2SA1611-M5M6	
*R51	1-216-097-91	s	METAL, CHIP 100k 5% 1/10W	*9
*R52	1-216-073-00	s	METAL, CHIP 10k 5% 1/10W	*9
*R53	1-216-057-00	s	METAL, CHIP 2.2k 5% 1/10W	*44
*R54	1-216-025-91	s	METAL, CHIP 100 5% 1/10W	*44
*R55	1-216-057-00	s	METAL, CHIP 2.2k 5% 1/10W	*44
*R56	1-216-041-00	s	METAL, CHIP 470 5% 1/10W	*44
*R57	1-216-041-00	s	METAL, CHIP 470 5% 1/10W	*9
*R58	1-216-049-91	s	METAL, CHIP 1k 5% 1/10W	*9
R101	1-216-295-91	s	RES, CHIP 0	
R102	1-216-295-91	s	RES, CHIP 0	
R103	1-216-638-11	s	METAL, CHIP 300 0.5% 1/10W	
R104	1-216-638-11	s	METAL, CHIP 300 0.5% 1/10W	

Note: In this list * marked parts are design changed.
Refer to pages 18-29 to 18-31 for applicable serial numbers.

(VP-44P BOARD(for UVW-1200P, PAL))

Ref. No. or Q'ty	Part No.	SP	Description
R105	1-216-025-91	s	METAL, CHIP 100 5% 1/10W
R106	1-216-057-00	s	METAL, CHIP 2.2k 5% 1/10W
R108	1-216-025-91	s	METAL, CHIP 100 5% 1/10W
R109	1-216-025-91	s	METAL, CHIP 100 5% 1/10W
R110	1-216-049-91	s	METAL, CHIP 1k 5% 1/10W
R111	1-216-025-91	s	METAL, CHIP 100 5% 1/10W
R112	1-216-065-00	s	METAL, CHIP 4.7k 5% 1/10W
R113	1-216-025-91	s	METAL, CHIP 100 5% 1/10W
R114	1-216-057-00	s	METAL, CHIP 2.2k 5% 1/10W
R115	1-216-025-91	s	METAL, CHIP 100 5% 1/10W
R116	1-216-073-00	s	METAL, CHIP 10k 5% 1/10W
R117	1-216-073-00	s	METAL, CHIP 10k 5% 1/10W
R118	1-216-025-91	s	METAL, CHIP 100 5% 1/10W
R119	1-216-057-00	s	METAL, CHIP 2.2k 5% 1/10W
R120	1-216-638-11	s	METAL, CHIP 300 0.5% 1/10W
R121	1-216-065-00	s	METAL, CHIP 4.7k 5% 1/10W
R122	1-216-638-11	s	METAL, CHIP 300 0.5% 1/10W
R123	1-216-025-91	s	METAL, CHIP 100 5% 1/10W
R124	1-216-049-91	s	METAL, CHIP 1k 5% 1/10W
R125	1-216-065-00	s	METAL, CHIP 4.7k 5% 1/10W
R126	1-216-049-91	s	METAL, CHIP 1k 5% 1/10W
R127	1-216-073-00	s	METAL, CHIP 10k 5% 1/10W
R128	1-216-097-91	s	METAL, CHIP 100k 5% 1/10W
R129	1-216-025-91	s	METAL, CHIP 100 5% 1/10W
R130	1-216-025-91	s	METAL, CHIP 100 5% 1/10W
R131	1-208-775-11	s	METAL, CHIP 510 0.5% 1/10W
R132	1-208-774-11	s	METAL, CHIP 470 5% 1/10W
R133	1-216-041-00	s	METAL, CHIP 470 5% 1/10W
R134	1-216-645-11	s	METAL, CHIP 560 0.5% 1/10W
R135	1-216-025-91	s	METAL, CHIP 100 5% 1/10W
R136	1-208-822-11	s	METAL, CHIP 47k 0.5% 1/10W
R137	1-216-659-11	s	METAL, CHIP 2.2k 0.5% 1/10W
R138	1-216-065-00	s	METAL, CHIP 4.7k 5% 1/10W
R139	1-216-073-00	s	METAL, CHIP 10k 5% 1/10W
R140	1-216-025-91	s	METAL, CHIP 100 5% 1/10W
R141	1-216-073-00	s	METAL, CHIP 10k 5% 1/10W
R142	1-216-081-00	s	METAL, CHIP 22k 5% 1/10W
R143	1-216-041-00	s	METAL, CHIP 470 5% 1/10W
R144	1-216-635-11	s	METAL, CHIP 220 0.5% 1/10W
R145	1-216-037-00	s	METAL, CHIP 330 5% 1/10W
R146	1-216-037-00	s	METAL, CHIP 330 5% 1/10W
R147	1-216-065-00	s	METAL, CHIP 4.7k 5% 1/10W
R148	1-216-065-00	s	METAL, CHIP 4.7k 5% 1/10W
R149	1-216-655-11	s	METAL, CHIP 1.5k 0.5% 1/10W
R150	1-216-671-11	s	METAL, CHIP 6.8k 0.5% 1/10W
R151	1-216-025-91	s	METAL, CHIP 100 5% 1/10W
R152	1-216-057-00	s	METAL, CHIP 2.2k 5% 1/10W
R153	1-216-057-00	s	METAL, CHIP 2.2k 5% 1/10W
R154	1-216-037-00	s	METAL, CHIP 330 5% 1/10W
R155	1-216-041-00	s	METAL, CHIP 470 5% 1/10W
R156	1-216-035-00	s	METAL, CHIP 270 5% 1/10W
R157	1-216-037-00	s	METAL, CHIP 330 5% 1/10W
R158	1-216-065-00	s	METAL, CHIP 4.7k 5% 1/10W
R159	1-216-077-00	s	METAL, CHIP 15k 5% 1/10W
R160	1-216-085-00	s	METAL, CHIP 33k 5% 1/10W
R161	1-216-073-00	s	METAL, CHIP 10k 5% 1/10W
R162	1-216-073-00	s	METAL, CHIP 10k 5% 1/10W
R163	1-208-806-11	s	METAL, CHIP 10k 0.5% 1/10W
R164	1-216-659-11	s	METAL, CHIP 2.2k 0.5% 1/10W

(VP-44P BOARD(for UVW-1200P, PAL))

Ref. No. or Q'ty	Part No.	SP	Description
R165	1-216-065-00	s	METAL, CHIP 4.7k 5% 1/10W
R166	1-216-037-00	s	METAL, CHIP 330 5% 1/10W
R167	1-216-295-91	s	RES, CHIP 0
R168	1-216-073-00	s	METAL, CHIP 10k 5% 1/10W
R169	1-216-073-00	s	METAL, CHIP 10k 5% 1/10W
R170	1-216-073-00	s	METAL, CHIP 10k 5% 1/10W
R202	1-208-806-11	s	METAL, CHIP 10k 0.5% 1/10W
R203	1-208-806-11	s	METAL, CHIP 10k 0.5% 1/10W
R206	1-216-049-91	s	METAL, CHIP 1k 5% 1/10W
R207	1-216-025-91	s	METAL, CHIP 100 5% 1/10W
R208	1-216-025-91	s	METAL, CHIP 100 5% 1/10W
R209	1-216-639-11	s	METAL, CHIP 330 0.5% 1/10W
R210	1-216-057-00	s	METAL, CHIP 2.2k 5% 1/10W
R211	1-216-651-11	s	METAL, CHIP 1k 0.5% 1/10W
R212	1-216-025-91	s	METAL, CHIP 100 5% 1/10W
R213	1-216-639-11	s	METAL, CHIP 330 0.5% 1/10W
R214	1-216-065-00	s	METAL, CHIP 4.7k 5% 1/10W
R215	1-208-784-11	s	METAL, CHIP 1.2k 0.5% 1/10W
R216	1-216-673-11	s	METAL, CHIP 8.2k 0.5% 1/10W
R217	1-208-784-11	s	METAL, CHIP 1.2k 0.5% 1/10W
R218	1-216-073-00	s	METAL, CHIP 10k 5% 1/10W
R219	1-216-073-00	s	METAL, CHIP 10k 5% 1/10W
R220	1-216-025-91	s	METAL, CHIP 100 5% 1/10W
R221	1-216-025-91	s	METAL, CHIP 100 5% 1/10W
R222	1-216-065-00	s	METAL, CHIP 4.7k 5% 1/10W
R223	1-216-025-91	s	METAL, CHIP 100 5% 1/10W
R224	1-216-049-91	s	METAL, CHIP 1k 5% 1/10W
R225	1-216-049-91	s	METAL, CHIP 1k 5% 1/10W
R226	1-216-063-91	s	METAL, CHIP 3.9k 5% 1/10W
R227	1-216-065-00	s	METAL, CHIP 4.7k 5% 1/10W
R228	1-216-025-91	s	METAL, CHIP 100 5% 1/10W
R229	1-216-055-00	s	METAL, CHIP 1.8k 5% 1/10W
R230	1-216-025-91	s	METAL, CHIP 100 5% 1/10W
R231	1-216-049-91	s	METAL, CHIP 1k 5% 1/10W
R232	1-216-025-91	s	METAL, CHIP 100 5% 1/10W
R233	1-216-055-00	s	METAL, CHIP 1.8k 5% 1/10W
R234	1-216-057-00	s	METAL, CHIP 2.2k 5% 1/10W
R235	1-216-057-00	s	METAL, CHIP 2.2k 5% 1/10W
R236	1-216-025-91	s	METAL, CHIP 100 5% 1/10W
R237	1-216-065-00	s	METAL, CHIP 4.7k 5% 1/10W
R238	1-216-065-00	s	METAL, CHIP 4.7k 5% 1/10W
R239	1-216-025-91	s	METAL, CHIP 100 5% 1/10W
R240	1-216-655-11	s	METAL, CHIP 1.5k 0.5% 1/10W
R241	1-216-663-11	s	METAL, CHIP 3.3k 0.5% 1/10W
R242	1-216-049-91	s	METAL, CHIP 1k 5% 1/10W
R243	1-216-063-91	s	METAL, CHIP 3.9k 5% 1/10W
R244	1-216-646-11	s	METAL, CHIP 620 0.5% 1/10W
R245	1-216-671-11	s	METAL, CHIP 6.8k 0.5% 1/10W
R246	1-216-057-00	s	METAL, CHIP 2.2k 5% 1/10W
R247	1-216-667-11	s	METAL, CHIP 4.7k 0.5% 1/10W
R248	1-208-799-11	s	METAL, CHIP 5.1k 0.5% 1/10W
R249	1-216-057-00	s	METAL, CHIP 2.2k 5% 1/10W
R250	1-216-113-00	s	METAL, CHIP 470k 5% 1/10W
R251	1-216-667-11	s	METAL, CHIP 4.7k 0.5% 1/10W
R253	1-216-687-11	s	METAL, CHIP 33k 0.5% 1/10W
R254	1-216-687-11	s	METAL, CHIP 33k 0.5% 1/10W
R255	1-216-651-11	s	METAL, CHIP 1k 0.5% 1/10W
R256	1-216-025-91	s	METAL, CHIP 100 5% 1/10W
R257	1-216-638-11	s	METAL, CHIP 300 0.5% 1/10W

Note: In this list * marked parts are design changed.
Refer to pages 18-29 to 18-31 for applicable serial numbers.

(VP-44P BOARD(for UVW-1200P, PAL))

Ref. No. or Q'ty	Part No.	SP	Description
R258	1-216-665-11	s	METAL, CHIP 3.9k 0.5% 1/10W
R259	1-216-671-11	s	METAL, CHIP 6.8k 0.5% 1/10W
R260	1-216-689-11	s	METAL, CHIP 39k 0.5% 1/10W
R261	1-216-121-91	s	METAL, CHIP 1M 5% 1/10W
R262	1-216-685-11	s	METAL, CHIP 27k 0.5% 1/10W
R263	1-216-073-00	s	METAL, CHIP 10k 5% 1/10W
R264	1-216-025-91	s	METAL, CHIP 100 5% 1/10W
R265	1-216-041-00	s	METAL, CHIP 470 5% 1/10W
R266	1-216-638-11	s	METAL, CHIP 300 0.5% 1/10W
R267	1-216-037-00	s	METAL, CHIP 330 5% 1/10W
R268	1-216-057-00	s	METAL, CHIP 2.2k 5% 1/10W
R269	1-216-041-00	s	METAL, CHIP 470 5% 1/10W
R270	1-216-638-11	s	METAL, CHIP 300 0.5% 1/10W
R271	1-216-049-91	s	METAL, CHIP 1k 5% 1/10W
R272	1-208-751-11	s	METAL, CHIP 51 0.5% 1/10W
R273	1-216-037-00	s	METAL, CHIP 330 5% 1/10W
R274	1-216-295-91	s	RES, CHIP 0
R275	1-216-089-91	s	METAL, CHIP 47k 5% 1/10W
R276	1-216-057-00	s	METAL, CHIP 2.2k 5% 1/10W
R277	1-216-671-11	s	METAL, CHIP 6.8k 0.5% 1/10W
R278	1-216-025-91	s	METAL, CHIP 100 5% 1/10W
R301	1-216-295-91	s	RES, CHIP 0
R302	1-216-295-91	s	RES, CHIP 0
R303	1-216-638-11	s	METAL, CHIP 300 0.5% 1/10W
R304	1-216-638-11	s	METAL, CHIP 300 0.5% 1/10W
R305	1-216-025-91	s	METAL, CHIP 100 5% 1/10W
R306	1-216-049-91	s	METAL, CHIP 1k 5% 1/10W
R307	1-216-025-91	s	METAL, CHIP 100 5% 1/10W
R308	1-216-065-00	s	METAL, CHIP 4.7k 5% 1/10W
R309	1-216-025-91	s	METAL, CHIP 100 5% 1/10W
R310	1-216-025-91	s	METAL, CHIP 100 5% 1/10W
R311	1-216-057-00	s	METAL, CHIP 2.2k 5% 1/10W
R312	1-216-025-91	s	METAL, CHIP 100 5% 1/10W
R313	1-216-057-00	s	METAL, CHIP 2.2k 5% 1/10W
R314	1-216-073-00	s	METAL, CHIP 10k 5% 1/10W
R315	1-216-638-11	s	METAL, CHIP 300 0.5% 1/10W
R316	1-216-073-00	s	METAL, CHIP 10k 5% 1/10W
R317	1-216-025-91	s	METAL, CHIP 100 5% 1/10W
R318	1-216-638-11	s	METAL, CHIP 300 0.5% 1/10W
R319	1-216-065-00	s	METAL, CHIP 4.7k 5% 1/10W
R320	1-216-065-00	s	METAL, CHIP 4.7k 5% 1/10W
R321	1-216-049-91	s	METAL, CHIP 1k 5% 1/10W
R322	1-216-651-11	s	METAL, CHIP 1k 0.5% 1/10W
R323	1-216-049-91	s	METAL, CHIP 1k 5% 1/10W
R324	1-216-025-91	s	METAL, CHIP 100 5% 1/10W
R325	1-208-775-11	s	METAL, CHIP 510 0.5% 1/10W
R326	1-208-774-11	s	METAL, CHIP 470 5% 1/10W
R327	1-216-041-00	s	METAL, CHIP 470 5% 1/10W
R328	1-216-073-00	s	METAL, CHIP 10k 5% 1/10W
R329	1-216-097-91	s	METAL, CHIP 100k 5% 1/10W
R330	1-208-774-11	s	METAL, CHIP 470 5% 1/10W
R331	1-216-025-91	s	METAL, CHIP 100 5% 1/10W
R332	1-216-065-00	s	METAL, CHIP 4.7k 5% 1/10W
R333	1-216-073-00	s	METAL, CHIP 10k 5% 1/10W
R334	1-216-025-91	s	METAL, CHIP 100 5% 1/10W
R335	1-216-073-00	s	METAL, CHIP 10k 5% 1/10W
R336	1-216-635-11	s	METAL, CHIP 220 0.5% 1/10W
R337	1-216-041-00	s	METAL, CHIP 470 5% 1/10W
R338	1-216-037-00	s	METAL, CHIP 330 5% 1/10W

(VP-44P BOARD(for UVW-1200P, PAL))

Ref. No. or Q'ty	Part No.	SP	Description
R339	1-216-037-00	s	METAL, CHIP 330 5% 1/10W
R340	1-216-065-00	s	METAL, CHIP 4.7k 5% 1/10W
R341	1-216-065-00	s	METAL, CHIP 4.7k 5% 1/10W
R342	1-216-651-11	s	METAL, CHIP 1k 0.5% 1/10W
R343	1-208-784-11	s	METAL, CHIP 1.2k 0.5% 1/10W
R344	1-216-037-00	s	METAL, CHIP 330 5% 1/10W
R345	1-216-041-00	s	METAL, CHIP 470 5% 1/10W
R346	1-216-037-00	s	METAL, CHIP 330 5% 1/10W
R347	1-216-619-11	s	METAL, CHIP 47 0.5% 1/10W
R348	1-216-057-00	s	METAL, CHIP 2.2k 5% 1/10W
R349	1-216-025-91	s	METAL, CHIP 100 5% 1/10W
R350	1-216-065-00	s	METAL, CHIP 4.7k 5% 1/10W
R351	1-216-057-00	s	METAL, CHIP 2.2k 5% 1/10W
R352	1-216-077-00	s	METAL, CHIP 15k 5% 1/10W
R353	1-216-085-00	s	METAL, CHIP 33k 5% 1/10W
R354	1-216-073-00	s	METAL, CHIP 10k 5% 1/10W
R355	1-216-073-00	s	METAL, CHIP 10k 5% 1/10W
R356	1-208-806-11	s	METAL, CHIP 10k 0.5% 1/10W
R357	1-216-661-11	s	METAL, CHIP 2.7k 0.5% 1/10W
R358	1-216-065-00	s	METAL, CHIP 4.7k 5% 1/10W
R359	1-216-037-00	s	METAL, CHIP 330 5% 1/10W
R401	1-216-025-91	s	METAL, CHIP 100 5% 1/10W
R402	1-216-025-91	s	METAL, CHIP 100 5% 1/10W
R403	1-216-639-11	s	METAL, CHIP 330 0.5% 1/10W
R404	1-216-057-00	s	METAL, CHIP 2.2k 5% 1/10W
R405	1-216-639-11	s	METAL, CHIP 330 0.5% 1/10W
R406	1-216-025-91	s	METAL, CHIP 100 5% 1/10W
R407	1-216-065-00	s	METAL, CHIP 4.7k 5% 1/10W
R408	1-216-025-91	s	METAL, CHIP 100 5% 1/10W
R409	1-216-065-00	s	METAL, CHIP 4.7k 5% 1/10W
R410	1-216-651-11	s	METAL, CHIP 1k 0.5% 1/10W
R411	1-216-025-91	s	METAL, CHIP 100 5% 1/10W
R412	1-216-055-00	s	METAL, CHIP 1.8k 5% 1/10W
R413	1-216-025-91	s	METAL, CHIP 100 5% 1/10W
R414	1-216-673-11	s	METAL, CHIP 8.2k 0.5% 1/10W
R415	1-208-774-11	s	METAL, CHIP 470 5% 1/10W
R416	1-216-025-91	s	METAL, CHIP 100 5% 1/10W
R417	1-216-055-00	s	METAL, CHIP 1.8k 5% 1/10W
R418	1-208-784-11	s	METAL, CHIP 1.2k 0.5% 1/10W
R419	1-216-065-00	s	METAL, CHIP 4.7k 5% 1/10W
R420	1-216-651-11	s	METAL, CHIP 1k 0.5% 1/10W
R421	1-216-649-11	s	METAL, CHIP 820 0.5% 1/10W
R422	1-216-664-11	s	METAL, CHIP 3.6k 0.5% 1/10W
R423	1-216-073-00	s	METAL, CHIP 10k 5% 1/10W
R424	1-216-073-00	s	METAL, CHIP 10k 5% 1/10W
R425	1-216-025-91	s	METAL, CHIP 100 5% 1/10W
R426	1-208-806-11	s	METAL, CHIP 10k 0.5% 1/10W
R427	1-216-065-00	s	METAL, CHIP 4.7k 5% 1/10W
R428	1-216-025-91	s	METAL, CHIP 100 5% 1/10W
R429	1-216-057-00	s	METAL, CHIP 2.2k 5% 1/10W
R430	1-216-049-91	s	METAL, CHIP 1k 5% 1/10W
R431	1-216-063-91	s	METAL, CHIP 3.9k 5% 1/10W
R432	1-216-049-91	s	METAL, CHIP 1k 5% 1/10W
R433	1-216-057-00	s	METAL, CHIP 2.2k 5% 1/10W
R434	1-216-057-00	s	METAL, CHIP 2.2k 5% 1/10W
R435	1-216-025-91	s	METAL, CHIP 100 5% 1/10W
R436	1-216-025-91	s	METAL, CHIP 100 5% 1/10W
R437	1-216-065-00	s	METAL, CHIP 4.7k 5% 1/10W
R438	1-216-049-91	s	METAL, CHIP 1k 5% 1/10W

Note: In this list * marked parts are design changed.
Refer to pages 18-29 to 18-31 for applicable serial numbers.

(VP-44P BOARD(for UVW-1200P, PAL))

Ref. No. or Q'ty	Part No.	SP	Description
R439	1-216-063-91	s	METAL, CHIP 3.9k 5% 1/10W
R440	1-216-667-11	s	METAL, CHIP 4.7k 0.5% 1/10W
R441	1-216-667-11	s	METAL, CHIP 4.7k 0.5% 1/10W
R442	1-216-057-00	s	METAL, CHIP 2.2k 5% 1/10W
R443	1-216-113-00	s	METAL, CHIP 470k 5% 1/10W
R444	1-208-800-11	s	METAL, CHIP 5.6k 0.5% 1/10W
R446	1-216-687-11	s	METAL, CHIP 33k 0.5% 1/10W
R447	1-208-812-11	s	METAL, CHIP 18k 0.5% 1/10W
R448	1-216-651-11	s	METAL, CHIP 1k 0.5% 1/10W
R449	1-216-025-91	s	METAL, CHIP 100 5% 1/10W
R450	1-216-639-11	s	METAL, CHIP 330 0.5% 1/10W
R451	1-216-665-11	s	METAL, CHIP 3.9k 0.5% 1/10W
R452	1-208-800-11	s	METAL, CHIP 5.6k 0.5% 1/10W
R453	1-216-689-11	s	METAL, CHIP 39k 0.5% 1/10W
R454	1-216-121-91	s	METAL, CHIP 1M 5% 1/10W
R455	1-216-685-11	s	METAL, CHIP 27k 0.5% 1/10W
R456	1-216-073-00	s	METAL, CHIP 10k 5% 1/10W
R457	1-216-025-91	s	METAL, CHIP 100 5% 1/10W
R458	1-216-041-00	s	METAL, CHIP 470 5% 1/10W
R459	1-216-638-11	s	METAL, CHIP 300 0.5% 1/10W
R460	1-216-049-91	s	METAL, CHIP 1k 5% 1/10W
R461	1-208-751-11	s	METAL, CHIP 51 0.5% 1/10W
R462	1-216-037-00	s	METAL, CHIP 330 5% 1/10W
R463	1-216-057-00	s	METAL, CHIP 2.2k 5% 1/10W
R464	1-216-089-91	s	METAL, CHIP 47k 5% 1/10W
*R500	1-247-855-11	s	CARBON 10k 5% 1/4W
	1-216-073-00	s	METAL, CHIP 10k 5% 1/10W
R501	1-208-806-11	s	METAL, CHIP 10k 0.5% 1/10W
R502	1-208-806-11	s	METAL, CHIP 10k 0.5% 1/10W
R503	1-216-049-91	s	METAL, CHIP 1k 5% 1/10W
R504	1-216-049-91	s	METAL, CHIP 1k 5% 1/10W
R505	1-216-089-91	s	METAL, CHIP 47k 5% 1/10W
R506	1-216-049-91	s	METAL, CHIP 1k 5% 1/10W
R507	1-208-806-11	s	METAL, CHIP 10k 0.5% 1/10W
R508	1-216-687-11	s	METAL, CHIP 33k 0.5% 1/10W
R509	1-216-057-00	s	METAL, CHIP 2.2k 5% 1/10W
R510	1-216-049-91	s	METAL, CHIP 1k 5% 1/10W
R511	1-216-121-91	s	METAL, CHIP 1M 5% 1/10W
R512	1-216-049-91	s	METAL, CHIP 1k 5% 1/10W
R513	1-216-049-91	s	METAL, CHIP 1k 5% 1/10W
R514	1-216-033-00	s	METAL, CHIP 220 5% 1/10W
R515	1-216-045-00	s	METAL, CHIP 680 5% 1/10W
R516	1-216-077-00	s	METAL, CHIP 15k 5% 1/10W
R517	1-216-073-00	s	METAL, CHIP 10k 5% 1/10W
R518	1-216-017-91	s	METAL, CHIP 47 5% 1/10W
R519	1-216-027-00	s	METAL, CHIP 120 5% 1/10W
R520	1-216-647-11	s	METAL, CHIP 680 0.5% 1/10W
R521	1-216-659-11	s	METAL, CHIP 2.2k 0.5% 1/10W
R522	1-216-651-11	s	METAL, CHIP 1k 0.5% 1/10W
R523	1-216-025-91	s	METAL, CHIP 100 5% 1/10W
R524	1-216-057-00	s	METAL, CHIP 2.2k 5% 1/10W
R525	1-216-057-00	s	METAL, CHIP 2.2k 5% 1/10W
R526	1-216-025-91	s	METAL, CHIP 100 5% 1/10W
R527	1-216-041-00	s	METAL, CHIP 470 5% 1/10W
R528	1-216-627-11	s	METAL, CHIP 100 0.5% 1/10W
R529	1-216-661-11	s	METAL, CHIP 2.7k 0.5% 1/10W
R530	1-216-295-91	s	RES, CHIP 0
R531	1-216-057-00	s	METAL, CHIP 2.2k 5% 1/10W

(VP-44P BOARD(for UVW-1200P, PAL))

Ref. No. or Q'ty	Part No.	SP	Description
R532	1-216-025-91	s	METAL, CHIP 100 5% 1/10W
R533	1-216-017-91	s	METAL, CHIP 47 5% 1/10W
R534	1-216-055-00	s	METAL, CHIP 1.8k 5% 1/10W
R535	1-216-041-00	s	METAL, CHIP 470 5% 1/10W
R536	1-208-774-11	s	METAL, CHIP 470 5% 1/10W
R537	1-208-784-11	s	METAL, CHIP 1.2k 0.5% 1/10W
R538	1-208-774-11	s	METAL, CHIP 470 5% 1/10W
R539	1-208-774-11	s	METAL, CHIP 470 5% 1/10W
R540	1-216-025-91	s	METAL, CHIP 100 5% 1/10W
R541	1-216-041-00	s	METAL, CHIP 470 5% 1/10W
R542	1-216-025-91	s	METAL, CHIP 100 5% 1/10W
R544	1-216-061-00	s	METAL, CHIP 3.3k 5% 1/10W
R546	1-216-025-91	s	METAL, CHIP 100 5% 1/10W
R547	1-216-049-91	s	METAL, CHIP 1k 5% 1/10W
R548	1-216-049-91	s	METAL, CHIP 1k 5% 1/10W
R549	1-216-639-11	s	METAL, CHIP 330 0.5% 1/10W
R550	1-216-651-11	s	METAL, CHIP 1k 0.5% 1/10W
R551	1-216-041-00	s	METAL, CHIP 470 5% 1/10W
R552	1-208-784-11	s	METAL, CHIP 1.2k 0.5% 1/10W
R553	1-216-065-00	s	METAL, CHIP 4.7k 5% 1/10W
R554	1-216-651-11	s	METAL, CHIP 1k 0.5% 1/10W
R555	1-216-057-00	s	METAL, CHIP 2.2k 5% 1/10W
R556	1-216-049-91	s	METAL, CHIP 1k 5% 1/10W
R557	1-216-049-91	s	METAL, CHIP 1k 5% 1/10W
R558	1-216-025-91	s	METAL, CHIP 100 5% 1/10W
*8 R559	1-216-113-00	s	METAL, CHIP 470k 5% 1/10W
*9 R560	1-216-049-91	s	METAL, CHIP 1k 5% 1/10W
R561	1-216-053-00	s	METAL, CHIP 1.5k 5% 1/10W
R562	1-216-057-00	s	METAL, CHIP 2.2k 5% 1/10W
R563	1-216-049-91	s	METAL, CHIP 1k 5% 1/10W
R564	1-216-049-91	s	METAL, CHIP 1k 5% 1/10W
R565	1-216-057-00	s	METAL, CHIP 2.2k 5% 1/10W
R566	1-216-025-91	s	METAL, CHIP 100 5% 1/10W
R567	1-216-057-00	s	METAL, CHIP 2.2k 5% 1/10W
R568	1-216-057-00	s	METAL, CHIP 2.2k 5% 1/10W
R569	1-216-057-00	s	METAL, CHIP 2.2k 5% 1/10W
R570	1-216-041-00	s	METAL, CHIP 470 5% 1/10W
R571	1-216-057-00	s	METAL, CHIP 2.2k 5% 1/10W
R572	1-216-041-00	s	METAL, CHIP 470 5% 1/10W
R573	1-216-041-00	s	METAL, CHIP 470 5% 1/10W
R574	1-216-041-00	s	METAL, CHIP 470 5% 1/10W
R575	1-216-073-00	s	METAL, CHIP 10k 5% 1/10W
R576	1-216-049-91	s	METAL, CHIP 1k 5% 1/10W
R577	1-216-049-91	s	METAL, CHIP 1k 5% 1/10W
R578	1-216-049-91	s	METAL, CHIP 1k 5% 1/10W
R579	1-216-041-00	s	METAL, CHIP 470 5% 1/10W
R580	1-216-049-91	s	METAL, CHIP 1k 5% 1/10W
R581	1-216-053-00	s	METAL, CHIP 1.5k 5% 1/10W
R582	1-216-025-91	s	METAL, CHIP 100 5% 1/10W
R583	1-216-017-91	s	METAL, CHIP 47 5% 1/10W
R584	1-216-017-91	s	METAL, CHIP 47 5% 1/10W
R585	1-216-667-11	s	METAL, CHIP 4.7k 0.5% 1/10W
R586	1-216-651-11	s	METAL, CHIP 1k 0.5% 1/10W
R587	1-216-073-00	s	METAL, CHIP 10k 5% 1/10W
R588	1-208-784-11	s	METAL, CHIP 1.2k 0.5% 1/10W
R589	1-216-049-91	s	METAL, CHIP 1k 5% 1/10W
R590	1-216-081-00	s	METAL, CHIP 22k 5% 1/10W
R591	1-216-624-11	s	METAL, CHIP 75 0.5% 1/10W
R592	1-216-624-11	s	METAL, CHIP 75 0.5% 1/10W

Note: In this list * marked parts are design changed.
Refer to pages 18-29 to 18-31 for applicable serial numbers.

(VP-44P BOARD(for UVW-1200P, PAL))

Ref. No. or Q'ty	Part No.	SP	Description
R593	1-216-624-11	s	METAL, CHIP 75 0.5% 1/10W
R594	1-216-624-11	s	METAL, CHIP 75 0.5% 1/10W
R595	1-216-097-91	s	METAL, CHIP 100k 5% 1/10W
R601-606	1-216-049-91	s	METAL, CHIP 1k 5% 1/10W
R607	1-216-057-00	s	METAL, CHIP 2.2k 5% 1/10W
R608	1-216-057-00	s	METAL, CHIP 2.2k 5% 1/10W
R609	1-216-033-00	s	METAL, CHIP 220 5% 1/10W
R610	1-216-033-00	s	METAL, CHIP 220 5% 1/10W
R611	1-216-045-00	s	METAL, CHIP 680 5% 1/10W
R612	1-216-045-00	s	METAL, CHIP 680 5% 1/10W
R613	1-216-077-00	s	METAL, CHIP 15k 5% 1/10W
R614	1-216-077-00	s	METAL, CHIP 15k 5% 1/10W
R615	1-216-017-91	s	METAL, CHIP 47 5% 1/10W
R616	1-216-017-91	s	METAL, CHIP 47 5% 1/10W
R617	1-216-027-00	s	METAL, CHIP 120 5% 1/10W
R618	1-216-027-00	s	METAL, CHIP 120 5% 1/10W
R621	1-216-049-91	s	METAL, CHIP 1k 5% 1/10W
R622	1-216-049-91	s	METAL, CHIP 1k 5% 1/10W
R623	1-216-057-00	s	METAL, CHIP 2.2k 5% 1/10W
R624	1-216-057-00	s	METAL, CHIP 2.2k 5% 1/10W
R625	1-216-049-91	s	METAL, CHIP 1k 5% 1/10W
R626	1-216-057-00	s	METAL, CHIP 2.2k 5% 1/10W
R627	1-216-057-00	s	METAL, CHIP 2.2k 5% 1/10W
R628	1-216-295-91	s	RES, CHIP 0
R629	1-216-063-91	s	METAL, CHIP 3.9k 5% 1/10W
R630	1-216-121-91	s	METAL, CHIP 1M 5% 1/10W
R631	1-216-121-91	s	METAL, CHIP 1M 5% 1/10W
R632	1-216-655-11	s	METAL, CHIP 1.5k 0.5% 1/10W
R633	1-216-049-91	s	METAL, CHIP 1k 5% 1/10W
R634	1-216-049-91	s	METAL, CHIP 1k 5% 1/10W
R635	1-216-089-91	s	METAL, CHIP 47k 5% 1/10W
R636	1-216-049-91	s	METAL, CHIP 1k 5% 1/10W
R637	1-216-089-91	s	METAL, CHIP 47k 5% 1/10W
R638	1-216-049-91	s	METAL, CHIP 1k 5% 1/10W
R639	1-216-049-91	s	METAL, CHIP 1k 5% 1/10W
R640	1-216-049-91	s	METAL, CHIP 1k 5% 1/10W
R641	1-216-659-11	s	METAL, CHIP 2.2k 0.5% 1/10W
R642	1-216-065-00	s	METAL, CHIP 4.7k 5% 1/10W
R643	1-216-057-00	s	METAL, CHIP 2.2k 5% 1/10W
R644	1-216-057-00	s	METAL, CHIP 2.2k 5% 1/10W
R646	1-216-661-11	s	METAL, CHIP 2.7k 0.5% 1/10W
R647	1-208-800-11	s	METAL, CHIP 5.6k 0.5% 1/10W
R648	1-216-065-00	s	METAL, CHIP 4.7k 5% 1/10W
R649	1-216-065-00	s	METAL, CHIP 4.7k 5% 1/10W
R650	1-216-063-91	s	METAL, CHIP 3.9k 5% 1/10W
R651	1-216-057-00	s	METAL, CHIP 2.2k 5% 1/10W
R652	1-216-057-00	s	METAL, CHIP 2.2k 5% 1/10W
R653	1-216-649-11	s	METAL, CHIP 820 0.5% 1/10W
R654	1-216-065-00	s	METAL, CHIP 4.7k 5% 1/10W
R655	1-216-065-00	s	METAL, CHIP 4.7k 5% 1/10W
R656	1-216-081-00	s	METAL, CHIP 22k 5% 1/10W
R657	1-216-041-00	s	METAL, CHIP 470 5% 1/10W
R658	1-216-041-00	s	METAL, CHIP 470 5% 1/10W
R659	1-216-049-91	s	METAL, CHIP 1k 5% 1/10W
R660	1-216-037-00	s	METAL, CHIP 330 5% 1/10W
R661	1-216-109-00	s	METAL, CHIP 330k 5% 1/10W
R662	1-216-079-00	s	METAL, CHIP 18k 5% 1/10W
R663	1-216-077-00	s	METAL, CHIP 15k 5% 1/10W
R664	1-216-081-00	s	METAL, CHIP 22k 5% 1/10W

(VP-44P BOARD(for UVW-1200P, PAL))

Ref. No. or Q'ty	Part No.	SP	Description	
R665	1-216-081-00	s	METAL, CHIP 22k 5% 1/10W	
R666	1-216-097-91	s	METAL, CHIP 100k 5% 1/10W	
R667	1-216-049-91	s	METAL, CHIP 1k 5% 1/10W	
R671	1-208-785-11	s	METAL, CHIP 1.3k 0.5% 1/10W	
R672	1-216-049-91	s	METAL, CHIP 1k 5% 1/10W	
R673	1-216-049-91	s	METAL, CHIP 1k 5% 1/10W	
R674	1-216-655-11	s	METAL, CHIP 1.5k 0.5% 1/10W	
R675	1-216-049-91	s	METAL, CHIP 1k 5% 1/10W	
R676	1-216-057-00	s	METAL, CHIP 2.2k 5% 1/10W	
R677	1-216-647-11	s	METAL, CHIP 680 0.5% 1/10W	
R678	1-216-049-91	s	METAL, CHIP 1k 5% 1/10W	
R679	1-216-661-11	s	METAL, CHIP 2.7k 0.5% 1/10W	
R680	1-216-057-00	s	METAL, CHIP 2.2k 5% 1/10W	
R681	1-216-045-00	s	METAL, CHIP 680 5% 1/10W	
R682	1-216-639-11	s	METAL, CHIP 330 0.5% 1/10W	
R683	1-216-651-11	s	METAL, CHIP 1k 0.5% 1/10W	
R684	1-216-049-91	s	METAL, CHIP 1k 5% 1/10W	
R685	1-216-025-91	s	METAL, CHIP 100 5% 1/10W	
R686	1-216-025-91	s	METAL, CHIP 100 5% 1/10W	
R687	1-216-081-00	s	METAL, CHIP 22k 5% 1/10W	
R688	1-216-095-00	s	METAL, CHIP 82k 5% 1/10W	
R689	1-216-624-11	s	METAL, CHIP 75 0.5% 1/10W	
R690	1-216-073-00	s	METAL, CHIP 10k 5% 1/10W	
R691	1-216-073-00	s	METAL, CHIP 10k 5% 1/10W	
R692	1-208-785-11	s	METAL, CHIP 1.3k 0.5% 1/10W	
R693	1-216-652-11	s	METAL, CHIP 1.1k 0.5% 1/10W	
R694	1-216-666-11	s	METAL, CHIP 4.3k 0.5% 1/10W	
*R695	1-216-295-91	s	RES, CHIP 0	*9
R701	1-216-025-91	s	METAL, CHIP 100 5% 1/10W	
R702	1-216-025-91	s	METAL, CHIP 100 5% 1/10W	
R703	1-216-049-91	s	METAL, CHIP 1k 5% 1/10W	
R704	1-216-049-91	s	METAL, CHIP 1k 5% 1/10W	
R705	1-216-049-91	s	METAL, CHIP 1k 5% 1/10W	
R706	1-216-049-91	s	METAL, CHIP 1k 5% 1/10W	
R707	1-208-784-11	s	METAL, CHIP 1.2k 0.5% 1/10W	
R708	1-208-784-11	s	METAL, CHIP 1.2k 0.5% 1/10W	
R709	1-216-065-00	s	METAL, CHIP 4.7k 5% 1/10W	
R710	1-216-065-00	s	METAL, CHIP 4.7k 5% 1/10W	
R711	1-216-025-91	s	METAL, CHIP 100 5% 1/10W	
R712	1-216-025-91	s	METAL, CHIP 100 5% 1/10W	
R713-718	1-216-049-91	s	METAL, CHIP 1k 5% 1/10W	
R719	1-216-037-00	s	METAL, CHIP 330 5% 1/10W	
R720	1-216-037-00	s	METAL, CHIP 330 5% 1/10W	
R721	1-216-025-91	s	METAL, CHIP 100 5% 1/10W	
R722	1-216-025-91	s	METAL, CHIP 100 5% 1/10W	
R723	1-216-025-91	s	METAL, CHIP 100 5% 1/10W	
R724	1-216-025-91	s	METAL, CHIP 100 5% 1/10W	
R725	1-216-065-00	s	METAL, CHIP 4.7k 5% 1/10W	
R726	1-216-065-00	s	METAL, CHIP 4.7k 5% 1/10W	
R727	1-216-065-00	s	METAL, CHIP 4.7k 5% 1/10W	
R728	1-216-065-00	s	METAL, CHIP 4.7k 5% 1/10W	
R729	1-216-041-00	s	METAL, CHIP 470 5% 1/10W	
R730	1-216-041-00	s	METAL, CHIP 470 5% 1/10W	
R731	1-216-049-91	s	METAL, CHIP 1k 5% 1/10W	
R732	1-216-049-91	s	METAL, CHIP 1k 5% 1/10W	
R733	1-208-800-11	s	METAL, CHIP 5.6k 0.5% 1/10W	
R734	1-216-659-11	s	METAL, CHIP 2.2k 0.5% 1/10W	
R735	1-216-057-00	s	METAL, CHIP 2.2k 5% 1/10W	
R736	1-208-800-11	s	METAL, CHIP 5.6k 0.5% 1/10W	

Note: In this list * marked parts are design changed.
Refer to pages 18-29 to 18-31 for applicable serial numbers.

(VP-44P BOARD(for UVW-1200P, PAL))

Ref. No. or Q'ty	Part No.	SP	Description
R737	1-216-659-11	s	METAL, CHIP 2.2k 0.5% 1/10W
R738	1-216-055-00	s	METAL, CHIP 1.8k 5% 1/10W
R739	1-216-017-91	s	METAL, CHIP 47 5% 1/10W
R740	1-216-017-91	s	METAL, CHIP 47 5% 1/10W
R741	1-208-774-11	s	METAL, CHIP 470 5% 1/10W
R742	1-208-774-11	s	METAL, CHIP 470 5% 1/10W
R743	1-208-784-11	s	METAL, CHIP 1.2k 0.5% 1/10W
R744	1-208-774-11	s	METAL, CHIP 470 5% 1/10W
R745	1-208-774-11	s	METAL, CHIP 470 5% 1/10W
R746	1-208-784-11	s	METAL, CHIP 1.2k 0.5% 1/10W
R747	1-208-774-11	s	METAL, CHIP 470 5% 1/10W
R748	1-216-041-00	s	METAL, CHIP 470 5% 1/10W
R749	1-216-663-11	s	METAL, CHIP 3.3k 0.5% 1/10W
R750	1-216-663-11	s	METAL, CHIP 3.3k 0.5% 1/10W
R751	1-216-651-11	s	METAL, CHIP 1k 0.5% 1/10W
R752	1-216-651-11	s	METAL, CHIP 1k 0.5% 1/10W
R755	1-216-639-11	s	METAL, CHIP 330 0.5% 1/10W
R758	1-216-639-11	s	METAL, CHIP 330 0.5% 1/10W
R759	1-216-065-00	s	METAL, CHIP 4.7k 5% 1/10W
R760	1-216-065-00	s	METAL, CHIP 4.7k 5% 1/10W
R761	1-216-624-11	s	METAL, CHIP 75 0.5% 1/10W
R762	1-216-624-11	s	METAL, CHIP 75 0.5% 1/10W
R763-768	1-216-097-91	s	METAL, CHIP 100k 5% 1/10W
R769-775	1-216-049-91	s	METAL, CHIP 1k 5% 1/10W
R776	1-216-113-00	s	METAL, CHIP 470k 5% 1/10W
R777	1-216-049-91	s	METAL, CHIP 1k 5% 1/10W
R778	1-216-049-91	s	METAL, CHIP 1k 5% 1/10W
R779	1-216-049-91	s	METAL, CHIP 1k 5% 1/10W
R780	1-216-097-91	s	METAL, CHIP 100k 5% 1/10W
R781	1-216-049-91	s	METAL, CHIP 1k 5% 1/10W
R782	1-216-097-91	s	METAL, CHIP 100k 5% 1/10W
R784	1-216-049-91	s	METAL, CHIP 1k 5% 1/10W
RV101	1-241-785-11	s	RES, ADJ METAL 10k
RV102	1-241-785-11	s	RES, ADJ METAL 10k
RV103	1-241-761-11	s	RES, ADJ METAL 1k
RV201	1-241-763-11	s	RES, ADJ METAL 4.7k
RV301	1-241-785-11	s	RES, ADJ METAL 10k
RV302	1-241-785-11	s	RES, ADJ METAL 10k
RV303	1-241-761-11	s	RES, ADJ METAL 1k
RV401	1-241-764-11	s	RES, ADJ METAL 10k
RV501	1-241-761-11	s	RES, ADJ METAL 1k
RV502	1-241-763-11	s	RES, ADJ METAL 4.7k
RV503	1-241-762-11	s	RES, ADJ METAL 2.2k
RV504	1-241-761-11	s	RES, ADJ METAL 1k
RV505	1-241-760-11	s	RES, ADJ METAL 470
RV506-511	1-241-761-11	s	RES, ADJ METAL 1k
RV512	1-241-758-11	s	RES, ADJ METAL 100
RV601	1-241-783-11	s	RES, ADJ METAL 2.2k
RV602	1-241-787-11	s	RES, ADJ METAL 47k
RV603	1-241-787-11	s	RES, ADJ METAL 47k
RV604	1-241-783-11	s	RES, ADJ METAL 2.2k
RV605	1-241-784-11	s	RES, ADJ METAL 4.7k
RV606	1-241-784-11	s	RES, ADJ METAL 4.7k
RV607	1-241-779-11	s	RES, ADJ METAL 100
RV701	1-241-783-11	s	RES, ADJ METAL 2.2k
RV702	1-241-783-11	s	RES, ADJ METAL 2.2k
RV703	1-241-761-11	s	RES, ADJ METAL 1k

Note: In this list * marked parts are design changed.
Refer to pages 18-29 to 18-31 for applicable serial numbers.

(VP-44P BOARD(for UVW-1200P, PAL))

Ref. No. or Q'ty	Part No.	SP	Description
RV704	1-241-761-11	s	RES, ADJ METAL 1k
RV705	1-241-763-11	s	RES, ADJ METAL 4.7k
RV706	1-241-763-11	s	RES, ADJ METAL 4.7k
RV707	1-241-760-11	s	RES, ADJ METAL 470
RV708	1-241-760-11	s	RES, ADJ METAL 470
RV709	1-241-761-11	s	RES, ADJ METAL 1k
RV710	1-241-761-11	s	RES, ADJ METAL 1k
TH201	1-807-972-11	s	THERMISTOR SV-1715 1.25k
TH401	1-807-972-11	s	THERMISTOR SV-1715 1.25k
TH601	1-807-972-11	s	THERMISTOR SV-1715 1.25k

VR-155 BOARD

Ref. No. or Q'ty	Part No.	SP	Description

VR-155 board is used for UVW-1400/1400P.

1pc	1-648-916-11	o	PRINTED CIRCUIT BOARD, VR-155
CN402	1-564-005-11	o	CONNECTOR 6P, MALE
RV1	1-237-790-21	s	RES, VAR CARBON 10k
RV2	1-237-790-21	s	RES, VAR CARBON 10k

VRA-5A BOARD(for UVW-1400, NTSC)

Ref. No. or Q'ty	Part No.	SP	Description	
VRA-5A board is used for UVW-1400.				
1pc	A-8275-570-A	o	MOUNTED CIRCUIT BOARD, VRA-5A	
1pc	3-182-386-02	o	PLATE, SHIELD (L), CARD	
1pc	7-621-759-45	s	SCREW, +PSW2.6x6	
1pc	8-752-036-77	s	IC CXA1179N	
1pc	3-179-084-01	s	LEVER (R), PC BOARD	
1pc	3-179-085-01	s	LEVER (L), PC BOARD	
C101	1-126-933-11	s	ELECT 100uF 20% 16V	
C102	1-126-933-11	s	ELECT 100uF 20% 16V	
C103	1-163-033-91	s	CERAMIC, CHIP 0.022uF 50V	
C104	1-163-033-91	s	CERAMIC, CHIP 0.022uF 50V	
C105	1-164-004-11	s	CERAMIC, CHIP 0.1uF 10% 25V	
C106	1-126-925-11	s	ELECT 470uF 20% 10V	
C107	1-126-925-11	s	ELECT 470uF 20% 10V	
C108	1-163-033-91	s	CERAMIC, CHIP 0.022uF 50V	
C109	1-126-925-11	s	ELECT 470uF 20% 10V	
C110	1-163-033-91	s	CERAMIC, CHIP 0.022uF 50V	
C111	1-131-347-00	s	TANTALUM 1uF 10% 35V	
C112	1-163-033-91	s	CERAMIC, CHIP 0.022uF 50V	
C113	1-163-033-91	s	CERAMIC, CHIP 0.022uF 50V	
C114	1-163-033-91	s	CERAMIC, CHIP 0.022uF 50V	
C115	1-126-933-11	s	ELECT 100uF 20% 16V	
C116	1-126-933-11	s	ELECT 100uF 20% 16V	
C117	1-163-033-91	s	CERAMIC, CHIP 0.022uF 50V	
C118	1-163-033-91	s	CERAMIC, CHIP 0.022uF 50V	
C119	1-126-933-11	s	ELECT 100uF 20% 16V	
C121	1-163-227-11	s	CERAMIC, CHIP 10pF 5% 50V	
C122	1-163-231-11	s	CERAMIC, CHIP 15pF 5% 50V	
C123	1-163-231-11	s	CERAMIC, CHIP 15pF 5% 50V	
C124	1-163-033-91	s	CERAMIC, CHIP 0.022uF 50V	
C125	1-163-033-91	s	CERAMIC, CHIP 0.022uF 50V	
C126	1-163-033-91	s	CERAMIC, CHIP 0.022uF 50V	
C127	1-126-933-11	s	ELECT 100uF 20% 16V	
C128	1-131-381-00	s	TANTALUM 47uF 10% 10V	
C129	1-131-381-00	s	TANTALUM 47uF 10% 10V	
C130	1-131-353-00	s	TANTALUM 10uF 10% 35V	
C131	1-131-381-00	s	TANTALUM 47uF 10% 10V	
C132	1-131-381-00	s	TANTALUM 47uF 10% 10V	
C133	1-163-033-91	s	CERAMIC, CHIP 0.022uF 50V	
C134	1-163-033-91	s	CERAMIC, CHIP 0.022uF 50V	
C135	1-131-353-00	s	TANTALUM 10uF 10% 35V	
C136	1-163-033-91	s	CERAMIC, CHIP 0.022uF 50V	
C137	1-126-933-11	s	ELECT 100uF 20% 16V	
C138	1-163-235-11	s	CERAMIC, CHIP 22pF 5% 50V	
C140	1-163-239-11	s	CERAMIC, CHIP 33pF 5% 50V	
C141	1-163-231-11	s	CERAMIC, CHIP 15pF 5% 50V	
C142	1-163-033-91	s	CERAMIC, CHIP 0.022uF 50V	
C143	1-163-033-91	s	CERAMIC, CHIP 0.022uF 50V	
C144	1-163-033-91	s	CERAMIC, CHIP 0.022uF 50V	
C145	1-163-235-11	s	CERAMIC, CHIP 22pF 5% 50V	
C146	1-126-933-11	s	ELECT 100uF 20% 16V	
C147	1-126-933-11	s	ELECT 100uF 20% 16V	
C148	1-126-933-11	s	ELECT 100uF 20% 16V	
C200	1-163-033-91	s	CERAMIC, CHIP 0.022uF 50V	
*C201	1-163-097-00	s	CERAMIC, CHIP 15pF 5% 50V	*24
	1-163-229-11	s	CERAMIC, CHIP 12pF 5% 50V	*25
*C202	1-163-113-00	s	CERAMIC, CHIP 68pF 5% 50V	*24
	1-164-232-11	s	CERAMIC, CHIP 0.01uF 10% 100V	*25

(VRA-5A BOARD(for UVW-1400, NTSC))

Ref. No. or Q'ty	Part No.	SP	Description	
*C203	1-163-113-00	s	CERAMIC, CHIP 68pF 5% 50V	*24
	1-163-237-11	s	CERAMIC, CHIP 27pF 5% 50V	*25
C204	1-163-239-11	s	CERAMIC, CHIP 33pF 5% 50V	
C205	1-163-121-00	s	CERAMIC, CHIP 150pF 5% 50V	
C206	1-163-121-00	s	CERAMIC, CHIP 150pF 5% 50V	
C207	1-126-933-11	s	ELECT 100uF 20% 16V	
C208	1-163-251-11	s	CERAMIC, CHIP 100pF 5% 50V	
C209	1-163-251-11	s	CERAMIC, CHIP 100pF 5% 50V	
C210	1-163-251-11	s	CERAMIC, CHIP 100pF 5% 50V	
C211	1-163-251-11	s	CERAMIC, CHIP 100pF 5% 50V	
C217	1-163-033-91	s	CERAMIC, CHIP 0.022uF 50V	
C218	1-163-133-00	s	CERAMIC, CHIP 470pF 5% 50V	
C219	1-163-033-91	s	CERAMIC, CHIP 0.022uF 50V	
C220	1-163-139-00	s	CERAMIC, CHIP 820pF 5% 50V	
C221	1-163-033-91	s	CERAMIC, CHIP 0.022uF 50V	
C222	1-163-033-91	s	CERAMIC, CHIP 0.022uF 50V	
C223	1-126-925-11	s	ELECT 470uF 20% 10V	
C224	1-126-925-11	s	ELECT 470uF 20% 10V	
C225-234	1-163-033-91	s	CERAMIC, CHIP 0.022uF 50V	
C238	1-163-033-91	s	CERAMIC, CHIP 0.022uF 50V	
C239	1-163-033-91	s	CERAMIC, CHIP 0.022uF 50V	
C240-251	1-126-933-11	s	ELECT 100uF 20% 16V	
C252	1-126-933-11	s	ELECT 100uF 20% 16V	
C253-258	1-163-033-91	s	CERAMIC, CHIP 0.022uF 50V	
C259	1-163-251-11	s	CERAMIC, CHIP 100pF 5% 50V	
C260	1-163-251-11	s	CERAMIC, CHIP 100pF 5% 50V	
C261	1-126-933-11	s	ELECT 100uF 20% 16V	
C262	1-126-933-11	s	ELECT 100uF 20% 16V	
C263	1-163-033-91	s	CERAMIC, CHIP 0.022uF 50V	
C264	1-163-033-91	s	CERAMIC, CHIP 0.022uF 50V	
C265	1-163-251-11	s	CERAMIC, CHIP 100pF 5% 50V	
C267	1-163-139-00	s	CERAMIC, CHIP 820pF 5% 50V	
C268	1-163-139-00	s	CERAMIC, CHIP 820pF 5% 50V	
C269	1-163-251-11	s	CERAMIC, CHIP 100pF 5% 50V	
C270	1-164-161-11	s	CERAMIC, CHIP 0.0022uF 10% 100V	
C271	1-163-033-91	s	CERAMIC, CHIP 0.022uF 50V	
C301	1-126-933-11	s	ELECT 100uF 20% 16V	
C302	1-126-933-11	s	ELECT 100uF 20% 16V	
C303	1-163-033-91	s	CERAMIC, CHIP 0.022uF 50V	
C304	1-163-033-91	s	CERAMIC, CHIP 0.022uF 50V	
C305	1-126-933-11	s	ELECT 100uF 20% 16V	
C306	1-163-033-91	s	CERAMIC, CHIP 0.022uF 50V	
C307	1-163-249-11	s	CERAMIC, CHIP 82pF 5% 50V	
C308	1-163-033-91	s	CERAMIC, CHIP 0.022uF 50V	
C309	1-163-033-91	s	CERAMIC, CHIP 0.022uF 50V	
C310	1-163-235-11	s	CERAMIC, CHIP 22pF 5% 50V	
C311	1-163-243-11	s	CERAMIC, CHIP 47pF 5% 50V	
C312	1-131-353-00	s	TANTALUM 10uF 10% 35V	
C313	1-164-004-11	s	CERAMIC, CHIP 0.1uF 10% 25V	
C314	1-163-033-91	s	CERAMIC, CHIP 0.022uF 50V	
C316	1-163-263-11	s	CERAMIC, CHIP 330pF 5% 50V	
C317	1-163-033-91	s	CERAMIC, CHIP 0.022uF 50V	
C318	1-163-033-91	s	CERAMIC, CHIP 0.022uF 50V	
C319	1-163-033-91	s	CERAMIC, CHIP 0.022uF 50V	
C320	1-126-933-11	s	ELECT 100uF 20% 16V	
C321	1-126-933-11	s	ELECT 100uF 20% 16V	
C322	1-126-933-11	s	ELECT 100uF 20% 16V	

Note: In this list * marked parts are design changed.
Refer to pages 18-29 to 18-31 for applicable serial numbers.

(VRA-5A BOARD(for UVW-1400, NTSC))

Ref. No. or Q'ty	Part No.	SP	Description
C323	1-163-239-11	s	CERAMIC, CHIP 33pF 5% 50V
C324	1-163-263-11	s	CERAMIC, CHIP 330pF 5% 50V
C325	1-163-121-00	s	CERAMIC, CHIP 150pF 5% 50V
C326	1-164-004-11	s	CERAMIC, CHIP 0.1uF 10% 25V
C327	1-164-004-11	s	CERAMIC, CHIP 0.1uF 10% 25V
C328	1-163-033-91	s	CERAMIC, CHIP 0.022uF 50V
C329	1-163-033-91	s	CERAMIC, CHIP 0.022uF 50V
C330	1-126-933-11	s	ELECT 100uF 20% 16V
C331	1-163-017-00	s	CERAMIC, CHIP 0.0047uF 5% 50V
C332	1-163-017-00	s	CERAMIC, CHIP 0.0047uF 5% 50V
C333	1-163-033-91	s	CERAMIC, CHIP 0.022uF 50V
C334	1-163-033-91	s	CERAMIC, CHIP 0.022uF 50V
C335	1-126-933-11	s	ELECT 100uF 20% 16V
C336	1-163-033-91	s	CERAMIC, CHIP 0.022uF 50V
C337	1-163-033-91	s	CERAMIC, CHIP 0.022uF 50V
C338	1-163-133-00	s	CERAMIC, CHIP 470pF 5% 50V
C339	1-163-251-11	s	CERAMIC, CHIP 100pF 5% 50V
C340	1-163-033-91	s	CERAMIC, CHIP 0.022uF 50V
C341	1-126-933-11	s	ELECT 100uF 20% 16V
C342	1-163-033-91	s	CERAMIC, CHIP 0.022uF 50V
C343	1-163-033-91	s	CERAMIC, CHIP 0.022uF 50V
C344	1-163-121-00	s	CERAMIC, CHIP 150pF 5% 50V
C345	1-163-033-91	s	CERAMIC, CHIP 0.022uF 50V
C346	1-164-004-11	s	CERAMIC, CHIP 0.1uF 10% 25V
C347	1-164-004-11	s	CERAMIC, CHIP 0.1uF 10% 25V
C348	1-163-235-11	s	CERAMIC, CHIP 22pF 5% 50V
C349	1-163-239-11	s	CERAMIC, CHIP 33pF 5% 50V
C350	1-126-933-11	s	ELECT 100uF 20% 16V
C351	1-163-033-91	s	CERAMIC, CHIP 0.022uF 50V
C352	1-163-133-00	s	CERAMIC, CHIP 470pF 5% 50V
C353	1-126-933-11	s	ELECT 100uF 20% 16V
C354	1-163-121-00	s	CERAMIC, CHIP 150pF 5% 50V
C355	1-163-033-91	s	CERAMIC, CHIP 0.022uF 50V
C356	1-163-231-11	s	CERAMIC, CHIP 15pF 5% 50V
C357	1-163-033-91	s	CERAMIC, CHIP 0.022uF 50V
C358	1-164-004-11	s	CERAMIC, CHIP 0.1uF 10% 25V
C359	1-163-033-91	s	CERAMIC, CHIP 0.022uF 50V
C360	1-164-004-11	s	CERAMIC, CHIP 0.1uF 10% 25V
C361	1-163-241-11	s	CERAMIC, CHIP 39pF 5% 50V
C362	1-163-033-91	s	CERAMIC, CHIP 0.022uF 50V
C363	1-163-231-11	s	CERAMIC, CHIP 15pF 5% 50V
C364	1-163-033-91	s	CERAMIC, CHIP 0.022uF 50V
C365	1-126-933-11	s	ELECT 100uF 20% 16V
C366	1-163-263-11	s	CERAMIC, CHIP 330pF 5% 50V
C367	1-163-033-91	s	CERAMIC, CHIP 0.022uF 50V
C368	1-126-933-11	s	ELECT 100uF 20% 16V
C369	1-163-033-91	s	CERAMIC, CHIP 0.022uF 50V
C370	1-163-017-00	s	CERAMIC, CHIP 0.0047uF 5% 50V
C371	1-126-933-11	s	ELECT 100uF 20% 16V
C372	1-163-033-91	s	CERAMIC, CHIP 0.022uF 50V
C373	1-163-033-91	s	CERAMIC, CHIP 0.022uF 50V
C374	1-163-033-91	s	CERAMIC, CHIP 0.022uF 50V
C375	1-163-220-11	s	CERAMIC, CHIP 3pF 50V
C376	1-163-227-11	s	CERAMIC, CHIP 10pF 5% 50V
C377	1-126-933-11	s	ELECT 100uF 20% 16V
C378	1-126-933-11	s	ELECT 100uF 20% 16V
C379	1-163-133-00	s	CERAMIC, CHIP 470pF 5% 50V
C380	1-163-251-11	s	CERAMIC, CHIP 100pF 5% 50V
C381	1-163-033-91	s	CERAMIC, CHIP 0.022uF 50V

(VRA-5A BOARD(for UVW-1400, NTSC))

Ref. No. or Q'ty	Part No.	SP	Description	
C382	1-163-251-11	s	CERAMIC, CHIP 100pF 5% 50V	
C383	1-164-004-11	s	CERAMIC, CHIP 0.1uF 10% 25V	
C384	1-163-033-91	s	CERAMIC, CHIP 0.022uF 50V	
C385	1-163-139-00	s	CERAMIC, CHIP 820pF 5% 50V	
C386	1-163-033-91	s	CERAMIC, CHIP 0.022uF 50V	
C387	1-163-033-91	s	CERAMIC, CHIP 0.022uF 50V	
C388	1-163-251-11	s	CERAMIC, CHIP 100pF 5% 50V	
C389	1-126-933-11	s	ELECT 100uF 20% 16V	
C390	1-163-033-91	s	CERAMIC, CHIP 0.022uF 50V	
C391	1-163-033-91	s	CERAMIC, CHIP 0.022uF 50V	
C392	1-163-089-00	s	CERAMIC, CHIP 6pF 50V	
C393	1-163-102-00	s	CERAMIC, CHIP 24pF 5% 50V	
C394	1-163-113-00	s	CERAMIC, CHIP 68pF 5% 50V	
C395	1-126-933-11	s	ELECT 100uF 20% 16V	
C396	1-163-102-00	s	CERAMIC, CHIP 24pF 5% 50V	
C397	1-163-251-11	s	CERAMIC, CHIP 100pF 5% 50V	
C398	1-164-232-11	s	CERAMIC, CHIP 0.01uF 10% 100V	
C399	1-163-263-11	s	CERAMIC, CHIP 330pF 5% 50V	
C501	1-126-933-11	s	ELECT 100uF 20% 16V	
C502	1-126-933-11	s	ELECT 100uF 20% 16V	
C503	1-126-933-11	s	ELECT 100uF 20% 16V	
C504	1-163-033-91	s	CERAMIC, CHIP 0.022uF 50V	
C505	1-163-033-91	s	CERAMIC, CHIP 0.022uF 50V	
C506	1-163-102-00	s	CERAMIC, CHIP 24pF 5% 50V	
C507	1-163-257-11	s	CERAMIC, CHIP 180pF 5% 50V	
C508	1-126-933-11	s	ELECT 100uF 20% 16V	
C509	1-126-933-11	s	ELECT 100uF 20% 16V	
C510	1-163-033-91	s	CERAMIC, CHIP 0.022uF 50V	
C511	1-104-923-11	s	MICA, CHIP 180pF 0.25% 50V	
C513	1-163-091-00	s	CERAMIC, CHIP 8pF 50V	
*C514	1-163-243-11	s	CERAMIC, CHIP 47pF 5% 50V	*5
	1-163-239-11	s	CERAMIC, CHIP 33pF 5% 50V	*6
C515	1-163-091-00	s	CERAMIC, CHIP 8pF 50V	
C516	1-163-227-11	s	CERAMIC, CHIP 10pF 5% 50V	
C517	1-163-033-91	s	CERAMIC, CHIP 0.022uF 50V	
C518	1-163-033-91	s	CERAMIC, CHIP 0.022uF 50V	
C519	1-163-033-91	s	CERAMIC, CHIP 0.022uF 50V	
C520	1-163-033-91	s	CERAMIC, CHIP 0.022uF 50V	
C521	1-131-353-00	s	TANTALUM 10uF 10% 35V	
C522	1-163-102-00	s	CERAMIC, CHIP 24pF 5% 50V	
C523	1-126-933-11	s	ELECT 100uF 20% 16V	
C524	1-163-033-91	s	CERAMIC, CHIP 0.022uF 50V	
C525	1-164-004-11	s	CERAMIC, CHIP 0.1uF 10% 25V	
C526	1-163-033-91	s	CERAMIC, CHIP 0.022uF 50V	
C527	1-163-033-91	s	CERAMIC, CHIP 0.022uF 50V	
C528	1-163-033-91	s	CERAMIC, CHIP 0.022uF 50V	
C529	1-163-033-91	s	CERAMIC, CHIP 0.022uF 50V	
C530	1-163-275-11	s	CERAMIC, CHIP 0.001uF 5% 50V	
C531	1-164-161-11	s	CERAMIC, CHIP 0.0022uF 10% 100V	
C603	1-126-933-11	s	ELECT 100uF 20% 16V	
C604	1-163-033-91	s	CERAMIC, CHIP 0.022uF 50V	
C605	1-163-033-91	s	CERAMIC, CHIP 0.022uF 50V	
C606	1-163-099-00	s	CERAMIC, CHIP 18pF 5% 50V	
C607	1-163-125-00	s	CERAMIC, CHIP 220pF 5% 50V	
C608	1-126-933-11	s	ELECT 100uF 20% 16V	
C609	1-126-933-11	s	ELECT 100uF 20% 16V	
C610	1-163-033-91	s	CERAMIC, CHIP 0.022uF 50V	
C611	1-104-923-11	s	MICA, CHIP 180pF 0.25% 50V	

Note: In this list * marked parts are design changed.
Refer to pages 18-29 to 18-31 for applicable serial numbers.

(VRA-5A BOARD(for UVW-1400, NTSC))

Ref. No. or Q'ty	Part No.	SP	Description
C613	1-163-091-00	s	CERAMIC, CHIP 8pF 50V
C614	1-163-227-11	s	CERAMIC, CHIP 10pF 5% 50V
C615	1-163-091-00	s	CERAMIC, CHIP 8pF 50V
C616	1-163-227-11	s	CERAMIC, CHIP 10pF 5% 50V
C617	1-163-033-91	s	CERAMIC, CHIP 0.022uF 50V
C618	1-163-033-91	s	CERAMIC, CHIP 0.022uF 50V
C619	1-163-033-91	s	CERAMIC, CHIP 0.022uF 50V
C620	1-163-033-91	s	CERAMIC, CHIP 0.022uF 50V
C621	1-131-353-00	s	TANTALUM 10uF 10% 35V
C622	1-163-139-00	s	CERAMIC, CHIP 820pF 5% 50V
C623	1-163-139-00	s	CERAMIC, CHIP 820pF 5% 50V
C624	1-163-033-91	s	CERAMIC, CHIP 0.022uF 50V
C625	1-126-933-11	s	ELECT 100uF 20% 16V
C626	1-163-033-91	s	CERAMIC, CHIP 0.022uF 50V
C627	1-163-033-91	s	CERAMIC, CHIP 0.022uF 50V
C628	1-163-033-91	s	CERAMIC, CHIP 0.022uF 50V
C631	1-126-933-11	s	ELECT 100uF 20% 16V
C632	1-163-033-91	s	CERAMIC, CHIP 0.022uF 50V
C701	1-126-933-11	s	ELECT 100uF 20% 16V
C702	1-126-933-11	s	ELECT 100uF 20% 16V
C703	1-126-933-11	s	ELECT 100uF 20% 16V
C704	1-126-933-11	s	ELECT 100uF 20% 16V
C705	1-131-347-00	s	TANTALUM 1uF 10% 35V
C706	1-163-033-91	s	CERAMIC, CHIP 0.022uF 50V
C708	1-126-933-11	s	ELECT 100uF 20% 16V
C709	1-163-125-00	s	CERAMIC, CHIP 220pF 5% 50V
C710	1-163-125-00	s	CERAMIC, CHIP 220pF 5% 50V
C711	1-163-033-91	s	CERAMIC, CHIP 0.022uF 50V
C712	1-163-033-91	s	CERAMIC, CHIP 0.022uF 50V
C713	1-163-251-11	s	CERAMIC, CHIP 100pF 5% 50V
C714	1-163-251-11	s	CERAMIC, CHIP 100pF 5% 50V
C801	1-163-275-11	s	CERAMIC, CHIP 0.001uF 5% 50V
C802	1-163-251-11	s	CERAMIC, CHIP 100pF 5% 50V
C803	1-126-933-11	s	ELECT 100uF 20% 16V
C804	1-163-275-11	s	CERAMIC, CHIP 0.001uF 5% 50V
C805	1-163-125-00	s	CERAMIC, CHIP 220pF 5% 50V
C806	1-131-347-00	s	TANTALUM 1uF 10% 35V
C807	1-131-347-00	s	TANTALUM 1uF 10% 35V
C808	1-163-275-11	s	CERAMIC, CHIP 0.001uF 5% 50V
C809	1-163-033-91	s	CERAMIC, CHIP 0.022uF 50V
C810	1-163-251-11	s	CERAMIC, CHIP 100pF 5% 50V
C811	1-131-347-00	s	TANTALUM 1uF 10% 35V
C812	1-131-353-00	s	TANTALUM 10uF 10% 35V
C813	1-126-933-11	s	ELECT 100uF 20% 16V
C814	1-163-033-91	s	CERAMIC, CHIP 0.022uF 50V
C815	1-163-033-91	s	CERAMIC, CHIP 0.022uF 50V
C816	1-131-347-00	s	TANTALUM 1uF 10% 35V
C901	1-126-933-11	s	ELECT 100uF 20% 16V
C902	1-126-933-11	s	ELECT 100uF 20% 16V
C903	1-163-033-91	s	CERAMIC, CHIP 0.022uF 50V
C904	1-163-033-91	s	CERAMIC, CHIP 0.022uF 50V
C905	1-126-933-11	s	ELECT 100uF 20% 16V
C906	1-126-933-11	s	ELECT 100uF 20% 16V
C907	1-163-033-91	s	CERAMIC, CHIP 0.022uF 50V
C908	1-163-033-91	s	CERAMIC, CHIP 0.022uF 50V
C909	1-126-933-11	s	ELECT 100uF 20% 16V
C910	1-163-033-91	s	CERAMIC, CHIP 0.022uF 50V
C911	1-126-933-11	s	ELECT 100uF 20% 16V
C912	1-126-933-11	s	ELECT 100uF 20% 16V

(VRA-5A BOARD(for UVW-1400, NTSC))

Ref. No. or Q'ty	Part No.	SP	Description	
C913	1-163-033-91	s	CERAMIC, CHIP 0.022uF 50V	
C914	1-163-033-91	s	CERAMIC, CHIP 0.022uF 50V	
C915	1-126-933-11	s	ELECT 100uF 20% 16V	
C916	1-163-033-91	s	CERAMIC, CHIP 0.022uF 50V	
C917	1-126-933-11	s	ELECT 100uF 20% 16V	
C918	1-163-033-91	s	CERAMIC, CHIP 0.022uF 50V	
CN101	1-573-782-21	o	CONNECTOR, PHEC 60P, MALE	
CN102	1-573-782-21	o	CONNECTOR, PHEC 60P, MALE	
CV301	1-141-442-91	s	CAP, TRIMMER 20pF	
D101	8-719-941-23	s	DIODE DA204U	
D102	8-719-941-23	s	DIODE DA204U	
D109	8-719-123-82	s	DIODE 1SS303-T1	
D202	8-719-123-82	s	DIODE 1SS303-T1	
D301	8-719-041-39	s	DIODE KV1470	
D303	8-719-821-39	s	DIODE 1SV160	
*D305	8-713-300-88	s	DIODE 1T33C-01	*31
	8-719-002-81	s	DIODE 1T363A-M20-T8A	*32
D306	8-719-941-23	s	DIODE DA204U	
D701	8-719-105-38	s	DIODE RD3.0M-B1	
D801	8-719-941-23	s	DIODE DA204U	
FB201	1-543-309-21	s	BEAD, FERRITE	
FL101	1-239-769-11	s	FILTER, LOW-PASS 5MHz	
FL102	1-239-313-11	s	FILTER, LOW-PASS 2MHz	
FL103	1-239-313-11	s	FILTER, LOW-PASS 2MHz	
FL201	1-239-769-11	s	FILTER, LOW-PASS 5MHz	
FL202	1-239-801-11	s	FILTER, LOW-PASS 4MHz	
IC101	8-759-300-71	s	IC HD14053BFP	
IC102	8-759-300-71	s	IC HD14053BFP	
IC103	8-759-908-92	s	IC TL084CNS	
IC104	8-759-925-76	s	IC SN74HC08ANS	
IC201	8-759-925-90	s	IC SN74HC74ANS	
IC202	8-759-300-71	s	IC HD14053BFP	
IC203	8-759-927-46	s	IC SN74HC00ANS	
IC205	8-759-085-99	s	IC MB40568PF-G-BND	
IC206	8-759-085-99	s	IC MB40568PF-G-BND	
IC207	8-759-035-93	s	IC TC7S32F-TE85L	
IC208	8-759-147-02	s	IC UPD42101C-3	
IC209	8-759-147-02	s	IC UPD42101C-3	
IC210	8-759-513-76	s	IC CXD8161AQ	
IC211	8-759-031-84	s	IC TC7S04F	
IC212	8-752-329-28	s	IC CXD1151Q	
IC213	8-752-363-43	s	IC CXD1171M-1-TH	
IC214	8-752-363-43	s	IC CXD1171M-1-TH	
IC215	8-759-300-71	s	IC HD14053BFP	
IC216	8-759-907-81	s	IC SN74LS221NS	
IC217	8-759-008-31	s	IC MC74HC4002F	
IC218	8-759-925-85	s	IC SN74HC32ANS	
IC219	8-759-234-20	s	IC TC7S08F	
IC220	8-759-300-71	s	IC HD14053BFP	
IC301	8-759-008-67	s	IC MC14066BF	
IC302	8-752-339-04	s	IC CXD2208Q	
IC303	8-759-908-92	s	IC TL084CNS	
IC304	8-759-906-53	s	IC TL062CPS	
IC305	8-759-031-84	s	IC TC7S04F	
IC306	8-759-908-92	s	IC TL084CNS	
IC307	8-759-031-84	s	IC TC7S04F	

Note: In this list * marked parts are design changed.
Refer to pages 18-29 to 18-31 for applicable serial numbers.

(VRA-5A BOARD(for UVW-1400, NTSC))

Ref. No. or Q'ty	Part No.	SP	Description
IC308	8-759-906-53	s	IC TL062CPS
IC309	8-759-300-71	s	IC HD14053BFP
IC310	8-759-520-55	s	IC CXD8243AM
IC311	8-759-008-67	s	IC MC14066BF
IC312	8-759-907-81	s	IC SN74LS221NS
IC313	8-759-239-58	s	IC TC74HC221AF
IC314	8-759-009-06	s	IC MC14052BF
IC315	8-759-908-15	s	IC TL431CLP
IC316	8-759-908-15	s	IC TL431CLP
IC317	8-759-031-84	s	IC TC7S04F
IC501	1-810-334-11	s	HIC BP-023
IC502	8-759-908-15	s	IC TL431CLP
IC601	1-810-334-11	s	HIC BP-023
IC602	8-759-908-15	s	IC TL431CLP
IC701	8-759-300-71	s	IC HD14053BFP
IC702	8-752-052-82	s	IC CXA1432M
IC703	8-759-242-64	s	IC TC4W53F
IC704	8-759-239-58	s	IC TC74HC221AF
IC705	8-759-925-90	s	IC SN74HC74ANS
IC706	8-759-926-24	s	IC SN74HC164ANS
IC707	8-759-242-64	s	IC TC4W53F
IC801	8-752-064-20	s	IC CXA1727Q
IC802	8-752-356-06	s	IC CXD2122AQ
IC901	8-759-182-84	s	IC PQ05SZ5U
IC902	8-759-822-95	s	IC L79M05T-FA
IC903	8-759-182-84	s	IC PQ05SZ5U
IC904	8-759-172-41	s	IC L78M09T-TL
L101-105	1-410-482-31	s	INDUCTOR 100uH
L107	1-410-482-31	s	INDUCTOR 100uH
L201	1-408-413-00	s	INDUCTOR 22uH
*L202	1-410-476-11	s	INDUCTOR 33uH
	1-408-413-00	s	INDUCTOR 22uH
L203	1-408-419-00	s	INDUCTOR 68uH
L204	1-408-413-00	s	INDUCTOR 22uH
L205	1-410-462-11	s	INDUCTOR 2.2uH
L206	1-410-462-11	s	INDUCTOR 2.2uH
L207	1-410-482-31	s	INDUCTOR 100uH
L208	1-410-482-31	s	INDUCTOR 100uH
L301	1-410-482-31	s	INDUCTOR 100uH
L302	1-410-464-11	s	INDUCTOR 3.3uH
L303	1-410-478-11	s	INDUCTOR 47uH
L304	1-410-476-11	s	INDUCTOR 33uH
L305	1-408-406-00	s	INDUCTOR 5.6uH
L306-314	1-410-482-31	s	INDUCTOR 100uH
L315	1-410-470-11	s	INDUCTOR 10uH
L316	1-410-473-11	s	INDUCTOR 18uH
L317	1-408-416-00	s	INDUCTOR 39uH
L501	1-410-482-31	s	INDUCTOR 100uH
L502	1-410-482-31	s	INDUCTOR 100uH
L503	1-408-419-00	s	INDUCTOR 68uH
L505	1-410-464-11	s	INDUCTOR 3.3uH
L506	1-410-482-31	s	INDUCTOR 100uH
L507	1-410-478-11	s	INDUCTOR 47uH
L603	1-408-420-00	s	INDUCTOR 82uH
L605	1-410-464-11	s	INDUCTOR 3.3uH
L606	1-410-482-31	s	INDUCTOR 100uH
L607	1-408-425-00	s	INDUCTOR 220uH
L608	1-410-482-31	s	INDUCTOR 100uH

(VRA-5A BOARD(for UVW-1400, NTSC))

Ref. No. or Q'ty	Part No.	SP	Description
L801	1-410-482-31	s	INDUCTOR 100uH
L901-905	1-412-533-21	s	INDUCTOR 47uH
LV301	1-406-745-11	s	INDUCTOR, VAR 6.8uH
Q101	8-729-117-32	s	TRANSISTOR 2SC4177
Q102	8-729-117-32	s	TRANSISTOR 2SC4177
Q103	8-729-140-63	s	TRANSISTOR 2SA1611-M5M6
Q104	8-729-904-41	s	TRANSISTOR FMY3
Q105	8-729-117-32	s	TRANSISTOR 2SC4177
Q106	8-729-140-63	s	TRANSISTOR 2SA1611-M5M6
Q107	8-729-140-63	s	TRANSISTOR 2SA1611-M5M6
Q108	8-729-117-32	s	TRANSISTOR 2SC4177
Q109	8-729-117-32	s	TRANSISTOR 2SC4177
Q110	8-729-117-32	s	TRANSISTOR 2SC4177
Q111	8-729-117-32	s	TRANSISTOR 2SC4177
Q112	8-729-140-63	s	TRANSISTOR 2SA1611-M5M6
Q113	8-729-140-63	s	TRANSISTOR 2SA1611-M5M6
Q114	8-729-117-32	s	TRANSISTOR 2SC4177
Q115	8-729-117-32	s	TRANSISTOR 2SC4177
Q116	8-729-140-63	s	TRANSISTOR 2SA1611-M5M6
Q117-122	8-729-117-32	s	TRANSISTOR 2SC4177
Q123	8-729-422-44	s	TRANSISTOR 2SK663
Q124	8-729-422-44	s	TRANSISTOR 2SK663
Q125	8-729-140-63	s	TRANSISTOR 2SA1611-M5M6
Q126	8-729-117-32	s	TRANSISTOR 2SC4177
Q127	8-729-117-32	s	TRANSISTOR 2SC4177
Q128	8-729-117-32	s	TRANSISTOR 2SC4177
Q129	8-729-117-32	s	TRANSISTOR 2SC4177
Q130	8-729-140-63	s	TRANSISTOR 2SA1611-M5M6
Q131	8-729-117-32	s	TRANSISTOR 2SC4177
*24 Q132	8-729-117-32	s	TRANSISTOR 2SC4177
*25 Q133	8-729-117-32	s	TRANSISTOR 2SC4177
Q201	8-729-117-32	s	TRANSISTOR 2SC4177
Q202	8-729-905-12	s	TRANSISTOR DTA144EU
Q203	8-729-905-18	s	TRANSISTOR DTC144EU
Q204	8-729-140-63	s	TRANSISTOR 2SA1611-M5M6
Q207	8-729-117-32	s	TRANSISTOR 2SC4177
Q209	8-729-140-63	s	TRANSISTOR 2SA1611-M5M6
Q210	8-729-117-32	s	TRANSISTOR 2SC4177
Q211	8-729-117-32	s	TRANSISTOR 2SC4177
Q212	8-729-140-63	s	TRANSISTOR 2SA1611-M5M6
Q213	8-729-117-32	s	TRANSISTOR 2SC4177
Q301	8-729-117-32	s	TRANSISTOR 2SC4177
Q303	8-729-117-32	s	TRANSISTOR 2SC4177
Q305	8-729-117-32	s	TRANSISTOR 2SC4177
Q306	8-729-140-63	s	TRANSISTOR 2SA1611-M5M6
Q307	8-729-140-63	s	TRANSISTOR 2SA1611-M5M6
Q308	8-729-905-18	s	TRANSISTOR DTC144EU
Q309	8-729-905-18	s	TRANSISTOR DTC144EU
Q310	8-729-117-32	s	TRANSISTOR 2SC4177
Q311	8-729-117-32	s	TRANSISTOR 2SC4177
Q312	8-729-140-63	s	TRANSISTOR 2SA1611-M5M6
Q313	8-729-140-63	s	TRANSISTOR 2SA1611-M5M6
Q314	8-729-140-63	s	TRANSISTOR 2SA1611-M5M6
Q315	8-729-140-63	s	TRANSISTOR 2SA1611-M5M6
Q316	8-729-905-18	s	TRANSISTOR DTC144EU
Q317	8-729-140-63	s	TRANSISTOR 2SA1611-M5M6
Q318	8-729-117-32	s	TRANSISTOR 2SC4177
Q319	8-729-140-63	s	TRANSISTOR 2SA1611-M5M6

Note: In this list * marked parts are design changed.
Refer to pages 18-29 to 18-31 for applicable serial numbers.

(VRA-5A BOARD(for UVW-1400, NTSC))

Ref. No. or Q'ty	Part No.	SP	Description	
Q320	8-729-140-63	s	TRANSISTOR 2SA1611-M5M6	
Q321	8-729-117-32	s	TRANSISTOR 2SC4177	
Q322	8-729-143-07	s	TRANSISTOR 2SA1610-YY33	
Q323	8-729-143-07	s	TRANSISTOR 2SA1610-YY33	
*Q324	8-729-201-27	s	TRANSISTOR 2SC2715-Y	*5
	8-729-120-28	s	TRANSISTOR 2SC1623-L5L6	*6
Q325	8-729-140-47	s	TRANSISTOR 2SC3735-B34	
Q508-512	8-729-117-32	s	TRANSISTOR 2SC4177	
Q513	8-729-117-72	s	TRANSISTOR 2SC4178	
Q514	8-729-117-72	s	TRANSISTOR 2SC4178	
Q515	8-729-117-32	s	TRANSISTOR 2SC4177	
Q516	8-729-117-72	s	TRANSISTOR 2SC4178	
Q517	8-729-117-72	s	TRANSISTOR 2SC4178	
Q518	8-729-140-63	s	TRANSISTOR 2SA1611-M5M6	
Q519	8-729-117-72	s	TRANSISTOR 2SC4178	
Q520	8-729-117-72	s	TRANSISTOR 2SC4178	
Q601	8-729-117-32	s	TRANSISTOR 2SC4177	
Q602	8-729-117-32	s	TRANSISTOR 2SC4177	
Q603	8-729-117-32	s	TRANSISTOR 2SC4177	
Q604-610	8-729-117-72	s	TRANSISTOR 2SC4178	
Q701	8-729-117-32	s	TRANSISTOR 2SC4177	
Q702	8-729-117-32	s	TRANSISTOR 2SC4177	
Q703	8-729-117-32	s	TRANSISTOR 2SC4177	
Q704	8-729-907-26	s	TRANSISTOR IMX1	
Q705	8-729-117-32	s	TRANSISTOR 2SC4177	
Q706	8-729-117-32	s	TRANSISTOR 2SC4177	
Q707	8-729-117-32	s	TRANSISTOR 2SC4177	
Q708	8-729-117-32	s	TRANSISTOR 2SC4177	
Q709	8-729-907-26	s	TRANSISTOR IMX1	
Q710	8-729-117-32	s	TRANSISTOR 2SC4177	
Q711	8-729-117-32	s	TRANSISTOR 2SC4177	
Q712	8-729-117-32	s	TRANSISTOR 2SC4177	
Q713	8-729-902-96	s	TRANSISTOR FMS1	
Q714	8-729-903-10	s	TRANSISTOR FMW1	
Q715	8-729-117-32	s	TRANSISTOR 2SC4177	
Q716	8-729-117-32	s	TRANSISTOR 2SC4177	
Q717	8-729-117-32	s	TRANSISTOR 2SC4177	
Q801	8-729-117-32	s	TRANSISTOR 2SC4177	
Q802	8-729-117-32	s	TRANSISTOR 2SC4177	
Q803	8-729-117-32	s	TRANSISTOR 2SC4177	
Q804	8-729-140-63	s	TRANSISTOR 2SA1611-M5M6	
R100	1-216-097-91	s	METAL, CHIP 100k 5% 1/10W	
R101	1-216-651-11	s	METAL, CHIP 1k 0.5% 1/10W	
R102	1-216-651-11	s	METAL, CHIP 1k 0.5% 1/10W	
R103	1-216-651-11	s	METAL, CHIP 1k 0.5% 1/10W	
R104	1-216-651-11	s	METAL, CHIP 1k 0.5% 1/10W	
R105	1-216-049-91	s	METAL, CHIP 1k 5% 1/10W	
R106	1-216-013-00	s	METAL, CHIP 33 5% 1/10W	
R107	1-216-097-91	s	METAL, CHIP 100k 5% 1/10W	
R108	1-216-097-91	s	METAL, CHIP 100k 5% 1/10W	
R109	1-216-025-91	s	METAL, CHIP 100 5% 1/10W	
R110	1-216-651-11	s	METAL, CHIP 1k 0.5% 1/10W	
R111	1-216-049-91	s	METAL, CHIP 1k 5% 1/10W	
R112	1-216-049-91	s	METAL, CHIP 1k 5% 1/10W	
R113	1-216-651-11	s	METAL, CHIP 1k 0.5% 1/10W	
R114	1-216-651-11	s	METAL, CHIP 1k 0.5% 1/10W	
R115	1-216-049-91	s	METAL, CHIP 1k 5% 1/10W	
R116	1-216-041-00	s	METAL, CHIP 470 5% 1/10W	

(VRA-5A BOARD(for UVW-1400, NTSC))

Ref. No. or Q'ty	Part No.	SP	Description
R117	1-216-639-11	s	METAL, CHIP 330 0.5% 1/10W
R118	1-216-639-11	s	METAL, CHIP 330 0.5% 1/10W
R119	1-216-041-00	s	METAL, CHIP 470 5% 1/10W
R120	1-216-641-11	s	METAL, CHIP 390 0.5% 1/10W
R121	1-216-057-00	s	METAL, CHIP 2.2k 5% 1/10W
R122	1-216-037-00	s	METAL, CHIP 330 5% 1/10W
R123	1-216-065-00	s	METAL, CHIP 4.7k 5% 1/10W
R124	1-216-049-91	s	METAL, CHIP 1k 5% 1/10W
R125	1-216-065-00	s	METAL, CHIP 4.7k 5% 1/10W
R126	1-216-041-00	s	METAL, CHIP 470 5% 1/10W
R127	1-216-025-91	s	METAL, CHIP 100 5% 1/10W
R128	1-216-065-00	s	METAL, CHIP 4.7k 5% 1/10W
R129	1-216-049-91	s	METAL, CHIP 1k 5% 1/10W
R130	1-216-073-00	s	METAL, CHIP 10k 5% 1/10W
R131	1-216-049-91	s	METAL, CHIP 1k 5% 1/10W
R132	1-216-049-91	s	METAL, CHIP 1k 5% 1/10W
R133	1-216-037-00	s	METAL, CHIP 330 5% 1/10W
R134	1-216-065-00	s	METAL, CHIP 4.7k 5% 1/10W
R135	1-216-657-11	s	METAL, CHIP 1.8k 0.5% 1/10W
R136	1-216-025-91	s	METAL, CHIP 100 5% 1/10W
R137	1-216-057-00	s	METAL, CHIP 2.2k 5% 1/10W
R138	1-216-651-11	s	METAL, CHIP 1k 0.5% 1/10W
R139	1-208-814-11	s	METAL, CHIP 22k 0.5% 1/10W
R140	1-216-651-11	s	METAL, CHIP 1k 0.5% 1/10W
R141	1-216-037-00	s	METAL, CHIP 330 5% 1/10W
R142	1-216-049-91	s	METAL, CHIP 1k 5% 1/10W
R143	1-216-057-00	s	METAL, CHIP 2.2k 5% 1/10W
R144	1-216-037-00	s	METAL, CHIP 330 5% 1/10W
R145	1-216-065-00	s	METAL, CHIP 4.7k 5% 1/10W
R146	1-216-049-91	s	METAL, CHIP 1k 5% 1/10W
R147	1-216-065-00	s	METAL, CHIP 4.7k 5% 1/10W
R148	1-216-121-91	s	METAL, CHIP 1M 5% 1/10W
R149	1-216-057-00	s	METAL, CHIP 2.2k 5% 1/10W
R150	1-216-049-91	s	METAL, CHIP 1k 5% 1/10W
R151	1-216-081-00	s	METAL, CHIP 22k 5% 1/10W
R152	1-216-121-91	s	METAL, CHIP 1M 5% 1/10W
R153	1-216-057-00	s	METAL, CHIP 2.2k 5% 1/10W
R154	1-216-049-91	s	METAL, CHIP 1k 5% 1/10W
R155	1-216-073-00	s	METAL, CHIP 10k 5% 1/10W
R156	1-216-073-00	s	METAL, CHIP 10k 5% 1/10W
R157	1-216-081-00	s	METAL, CHIP 22k 5% 1/10W
R158	1-216-073-00	s	METAL, CHIP 10k 5% 1/10W
R159	1-216-049-91	s	METAL, CHIP 1k 5% 1/10W
R160	1-216-049-91	s	METAL, CHIP 1k 5% 1/10W
R161	1-216-065-00	s	METAL, CHIP 4.7k 5% 1/10W
R162	1-216-037-00	s	METAL, CHIP 330 5% 1/10W
R163	1-216-025-91	s	METAL, CHIP 100 5% 1/10W
R164	1-216-057-00	s	METAL, CHIP 2.2k 5% 1/10W
R165	1-216-651-11	s	METAL, CHIP 1k 0.5% 1/10W
R166	1-208-814-11	s	METAL, CHIP 22k 0.5% 1/10W
R167	1-216-651-11	s	METAL, CHIP 1k 0.5% 1/10W
R168	1-216-037-00	s	METAL, CHIP 330 5% 1/10W
R169	1-216-049-91	s	METAL, CHIP 1k 5% 1/10W
R170	1-216-057-00	s	METAL, CHIP 2.2k 5% 1/10W
R171	1-216-037-00	s	METAL, CHIP 330 5% 1/10W
R172	1-216-065-00	s	METAL, CHIP 4.7k 5% 1/10W
R173	1-216-049-91	s	METAL, CHIP 1k 5% 1/10W
R174	1-216-065-00	s	METAL, CHIP 4.7k 5% 1/10W
R175	1-216-025-91	s	METAL, CHIP 100 5% 1/10W

Note: In this list * marked parts are design changed.
Refer to pages 18-29 to 18-31 for applicable serial numbers.

(VRA-5A BOARD(for UVW-1400, NTSC))

Ref. No. or Q'ty	Part No.	SP	Description	
R176	1-216-049-91	s	METAL, CHIP 1k 5% 1/10W	
R177	1-216-025-91	s	METAL, CHIP 100 5% 1/10W	
R178	1-216-627-11	s	METAL, CHIP 100 0.5% 1/10W	
R180	1-216-651-11	s	METAL, CHIP 1k 0.5% 1/10W	
R181	1-216-025-91	s	METAL, CHIP 100 5% 1/10W	
R182	1-216-049-91	s	METAL, CHIP 1k 5% 1/10W	
R184	1-216-651-11	s	METAL, CHIP 1k 0.5% 1/10W	
R185	1-216-025-91	s	METAL, CHIP 100 5% 1/10W	
R186	1-216-049-91	s	METAL, CHIP 1k 5% 1/10W	
*R188	1-216-619-11	s	METAL, CHIP 47 0.5% 1/10W	*1
	1-216-618-11	s	METAL, CHIP 43 0.5% 1/10W	*2
R190	1-216-646-11	s	METAL, CHIP 620 0.5% 1/10W	
R193	1-216-097-91	s	METAL, CHIP 100k 5% 1/10W	
R200	1-216-651-11	s	METAL, CHIP 1k 0.5% 1/10W	
R201	1-216-651-11	s	METAL, CHIP 1k 0.5% 1/10W	
R202	1-216-073-00	s	METAL, CHIP 10k 5% 1/10W	
R203	1-216-073-00	s	METAL, CHIP 10k 5% 1/10W	
R204	1-216-655-11	s	METAL, CHIP 1.5k 0.5% 1/10W	
R205	1-216-631-11	s	METAL, CHIP 150 0.5% 1/10W	
R206	1-216-655-11	s	METAL, CHIP 1.5k 0.5% 1/10W	
R207	1-216-631-11	s	METAL, CHIP 150 0.5% 1/10W	
R208	1-216-619-11	s	METAL, CHIP 47 0.5% 1/10W	
R209	1-216-619-11	s	METAL, CHIP 47 0.5% 1/10W	
R210	1-216-009-00	s	METAL, CHIP 22 5% 1/10W	
R211	1-216-013-00	s	METAL, CHIP 33 5% 1/10W	
R212	1-216-009-00	s	METAL, CHIP 22 5% 1/10W	
R216	1-216-013-00	s	METAL, CHIP 33 5% 1/10W	
R217	1-216-089-91	s	METAL, CHIP 47k 5% 1/10W	
R220	1-218-764-11	s	METAL, CHIP 330k 0.5% 1/10W	
R223	1-216-663-11	s	METAL, CHIP 3.3k 0.5% 1/10W	
R224	1-208-810-11	s	METAL, CHIP 15k 0.5% 1/10W	
R225	1-216-663-11	s	METAL, CHIP 3.3k 0.5% 1/10W	
R226	1-216-081-00	s	METAL, CHIP 22k 5% 1/10W	
R227	1-216-065-00	s	METAL, CHIP 4.7k 5% 1/10W	
R228	1-216-687-11	s	METAL, CHIP 33k 0.5% 1/10W	
R229	1-216-671-11	s	METAL, CHIP 6.8k 0.5% 1/10W	
R230	1-216-635-11	s	METAL, CHIP 220 0.5% 1/10W	
R231	1-216-635-11	s	METAL, CHIP 220 0.5% 1/10W	
R232	1-216-635-11	s	METAL, CHIP 220 0.5% 1/10W	
R233	1-216-635-11	s	METAL, CHIP 220 0.5% 1/10W	
R234	1-216-049-91	s	METAL, CHIP 1k 5% 1/10W	
R236	1-216-049-91	s	METAL, CHIP 1k 5% 1/10W	
R238	1-216-073-00	s	METAL, CHIP 10k 5% 1/10W	
R239	1-216-073-00	s	METAL, CHIP 10k 5% 1/10W	
R241	1-216-089-91	s	METAL, CHIP 47k 5% 1/10W	
R242	1-216-696-11	s	METAL, CHIP 75k 0.5% 1/10W	
R243	1-216-041-00	s	METAL, CHIP 470 5% 1/10W	
R244	1-216-041-00	s	METAL, CHIP 470 5% 1/10W	
R245	1-216-065-00	s	METAL, CHIP 4.7k 5% 1/10W	
R246	1-216-639-11	s	METAL, CHIP 330 0.5% 1/10W	
R247	1-216-639-11	s	METAL, CHIP 330 0.5% 1/10W	
R248	1-208-812-11	s	METAL, CHIP 18k 0.5% 1/10W	
R249	1-216-081-00	s	METAL, CHIP 22k 5% 1/10W	
R250	1-216-065-00	s	METAL, CHIP 4.7k 5% 1/10W	
R251	1-216-065-00	s	METAL, CHIP 4.7k 5% 1/10W	
R252	1-216-049-91	s	METAL, CHIP 1k 5% 1/10W	
R253	1-216-097-91	s	METAL, CHIP 100k 5% 1/10W	
R254	1-216-639-11	s	METAL, CHIP 330 0.5% 1/10W	

(VRA-5A BOARD(for UVW-1400, NTSC))

Ref. No. or Q'ty	Part No.	SP	Description
R255	1-216-639-11	s	METAL, CHIP 330 0.5% 1/10W
R256	1-216-049-91	s	METAL, CHIP 1k 5% 1/10W
R257	1-216-049-91	s	METAL, CHIP 1k 5% 1/10W
R258	1-216-073-00	s	METAL, CHIP 10k 5% 1/10W
R259	1-216-073-00	s	METAL, CHIP 10k 5% 1/10W
R261	1-216-073-00	s	METAL, CHIP 10k 5% 1/10W
R262	1-216-073-00	s	METAL, CHIP 10k 5% 1/10W
R263	1-216-073-00	s	METAL, CHIP 10k 5% 1/10W
R265	1-216-073-00	s	METAL, CHIP 10k 5% 1/10W
R266	1-216-073-00	s	METAL, CHIP 10k 5% 1/10W
R268	1-216-073-00	s	METAL, CHIP 10k 5% 1/10W
R269	1-216-073-00	s	METAL, CHIP 10k 5% 1/10W
R270	1-216-073-00	s	METAL, CHIP 10k 5% 1/10W
R272-279	1-216-073-00	s	METAL, CHIP 10k 5% 1/10W
R280	1-216-695-11	s	METAL, CHIP 68k 0.5% 1/10W
R301	1-216-073-00	s	METAL, CHIP 10k 5% 1/10W
R302	1-216-051-00	s	METAL, CHIP 1.2k 5% 1/10W
R303	1-216-049-91	s	METAL, CHIP 1k 5% 1/10W
R304	1-216-025-91	s	METAL, CHIP 100 5% 1/10W
R305	1-208-806-11	s	METAL, CHIP 10k 0.5% 1/10W
R306	1-208-806-11	s	METAL, CHIP 10k 0.5% 1/10W
R307	1-216-049-91	s	METAL, CHIP 1k 5% 1/10W
R308	1-216-049-91	s	METAL, CHIP 1k 5% 1/10W
R309	1-216-049-91	s	METAL, CHIP 1k 5% 1/10W
R310	1-216-049-91	s	METAL, CHIP 1k 5% 1/10W
R311	1-216-057-00	s	METAL, CHIP 2.2k 5% 1/10W
R312	1-216-057-00	s	METAL, CHIP 2.2k 5% 1/10W
R313	1-216-025-91	s	METAL, CHIP 100 5% 1/10W
R314	1-216-057-00	s	METAL, CHIP 2.2k 5% 1/10W
R315	1-216-073-00	s	METAL, CHIP 10k 5% 1/10W
R316	1-216-073-00	s	METAL, CHIP 10k 5% 1/10W
R317	1-216-049-91	s	METAL, CHIP 1k 5% 1/10W
R318	1-216-049-91	s	METAL, CHIP 1k 5% 1/10W
R319	1-216-049-91	s	METAL, CHIP 1k 5% 1/10W
R320	1-216-049-91	s	METAL, CHIP 1k 5% 1/10W
R321	1-216-097-91	s	METAL, CHIP 100k 5% 1/10W
R322	1-216-049-91	s	METAL, CHIP 1k 5% 1/10W
R323	1-216-646-11	s	METAL, CHIP 620 0.5% 1/10W
R324	1-216-057-00	s	METAL, CHIP 2.2k 5% 1/10W
R325	1-216-057-00	s	METAL, CHIP 2.2k 5% 1/10W
R326	1-216-041-00	s	METAL, CHIP 470 5% 1/10W
R327	1-208-774-11	s	METAL, CHIP 470 5% 1/10W
R328	1-208-800-11	s	METAL, CHIP 5.6k 0.5% 1/10W
R329	1-216-065-00	s	METAL, CHIP 4.7k 5% 1/10W
R330	1-216-049-91	s	METAL, CHIP 1k 5% 1/10W
R331	1-208-774-11	s	METAL, CHIP 470 5% 1/10W
R332	1-216-065-00	s	METAL, CHIP 4.7k 5% 1/10W
R333	1-216-117-00	s	METAL, CHIP 680k 5% 1/10W
R334	1-216-667-11	s	METAL, CHIP 4.7k 0.5% 1/10W
R335	1-216-073-00	s	METAL, CHIP 10k 5% 1/10W
R336	1-216-699-11	s	METAL, CHIP 100k 0.5% 1/10W
R338	1-216-089-91	s	METAL, CHIP 47k 5% 1/10W
R339	1-216-085-00	s	METAL, CHIP 33k 5% 1/10W
R340	1-216-073-00	s	METAL, CHIP 10k 5% 1/10W
R341	1-216-667-11	s	METAL, CHIP 4.7k 0.5% 1/10W
R342	1-218-760-11	s	METAL, CHIP 220k 0.5% 1/10W
R343	1-216-057-00	s	METAL, CHIP 2.2k 5% 1/10W
R344	1-216-085-00	s	METAL, CHIP 33k 5% 1/10W
R345	1-216-085-00	s	METAL, CHIP 33k 5% 1/10W

Note: In this list * marked parts are design changed.
Refer to pages 18-29 to 18-31 for applicable serial numbers.

(VRA-5A BOARD(for UVW-1400, NTSC))

Ref. No. or Q'ty	Part No.	SP	Description	
R346	1-216-073-00	s	METAL, CHIP 10k 5% 1/10W	
R347	1-216-049-91	s	METAL, CHIP 1k 5% 1/10W	
R348	1-216-065-00	s	METAL, CHIP 4.7k 5% 1/10W	
R349	1-216-049-91	s	METAL, CHIP 1k 5% 1/10W	
R350	1-216-025-91	s	METAL, CHIP 100 5% 1/10W	
R351	1-216-085-00	s	METAL, CHIP 33k 5% 1/10W	
R352	1-208-801-11	s	METAL, CHIP 6.2k 0.5% 1/10W	
R353	1-216-634-11	s	METAL, CHIP 200 0.5% 1/10W	
R354	1-216-663-11	s	METAL, CHIP 3.3k 0.5% 1/10W	
R355	1-216-073-00	s	METAL, CHIP 10k 5% 1/10W	
R356	1-216-065-00	s	METAL, CHIP 4.7k 5% 1/10W	
R357	1-216-121-91	s	METAL, CHIP 1M 5% 1/10W	
R358	1-216-117-00	s	METAL, CHIP 680k 5% 1/10W	
R359	1-216-635-11	s	METAL, CHIP 220 0.5% 1/10W	
R360	1-216-667-11	s	METAL, CHIP 4.7k 0.5% 1/10W	
R361	1-216-049-91	s	METAL, CHIP 1k 5% 1/10W	
R362	1-216-651-11	s	METAL, CHIP 1k 0.5% 1/10W	
R363	1-208-806-11	s	METAL, CHIP 10k 0.5% 1/10W	
R364	1-208-806-11	s	METAL, CHIP 10k 0.5% 1/10W	
R365	1-216-651-11	s	METAL, CHIP 1k 0.5% 1/10W	
R367	1-216-025-91	s	METAL, CHIP 100 5% 1/10W	
R368	1-216-651-11	s	METAL, CHIP 1k 0.5% 1/10W	
R369	1-216-665-11	s	METAL, CHIP 3.9k 0.5% 1/10W	
R370	1-216-049-91	s	METAL, CHIP 1k 5% 1/10W	
R371	1-216-635-11	s	METAL, CHIP 220 0.5% 1/10W	
R372	1-216-639-11	s	METAL, CHIP 330 0.5% 1/10W	
*R375	1-216-681-11	s	METAL, CHIP 18k 0.5% 1/10W	*31
	1-216-683-11	s	METAL, CHIP 22k 0.5% 1/10W	*45
	1-208-812-11	s	METAL, CHIP 18k 0.5% 1/10W	*35
R376	1-216-073-00	s	METAL, CHIP 10k 5% 1/10W	
R377	1-208-784-11	s	METAL, CHIP 1.2k 0.5% 1/10W	
R378	1-208-810-11	s	METAL, CHIP 15k 0.5% 1/10W	
R379	1-216-025-91	s	METAL, CHIP 100 5% 1/10W	
R380	1-216-671-11	s	METAL, CHIP 6.8k 0.5% 1/10W	
R381	1-216-073-00	s	METAL, CHIP 10k 5% 1/10W	
R382	1-216-673-11	s	METAL, CHIP 8.2k 0.5% 1/10W	
R383	1-216-673-11	s	METAL, CHIP 8.2k 0.5% 1/10W	
R384	1-216-673-11	s	METAL, CHIP 8.2k 0.5% 1/10W	
R385	1-216-025-91	s	METAL, CHIP 100 5% 1/10W	
R386	1-216-677-11	s	METAL, CHIP 12k 0.5% 1/10W	
R387	1-216-651-11	s	METAL, CHIP 1k 0.5% 1/10W	
R388	1-216-651-11	s	METAL, CHIP 1k 0.5% 1/10W	
R389	1-216-651-11	s	METAL, CHIP 1k 0.5% 1/10W	
R390	1-216-655-11	s	METAL, CHIP 1.5k 0.5% 1/10W	
R391	1-216-655-11	s	METAL, CHIP 1.5k 0.5% 1/10W	
R392	1-216-065-00	s	METAL, CHIP 4.7k 5% 1/10W	
R393	1-216-663-11	s	METAL, CHIP 3.3k 0.5% 1/10W	
R394	1-216-049-91	s	METAL, CHIP 1k 5% 1/10W	
R395	1-216-049-91	s	METAL, CHIP 1k 5% 1/10W	
R397	1-216-295-91	s	RES, CHIP 0	
R399	1-216-651-11	s	METAL, CHIP 1k 0.5% 1/10W	
R400	1-208-789-11	s	METAL, CHIP 2k 0.5% 1/10W	
R401	1-208-784-11	s	METAL, CHIP 1.2k 0.5% 1/10W	
R402	1-216-648-11	s	METAL, CHIP 750 0.5% 1/10W	
R403	1-216-037-00	s	METAL, CHIP 330 5% 1/10W	
R404	1-216-671-11	s	METAL, CHIP 6.8k 0.5% 1/10W	
R405	1-208-817-11	s	METAL, CHIP 30k 0.5% 1/10W	
R406	1-216-041-00	s	METAL, CHIP 470 5% 1/10W	
R407	1-216-133-00	s	METAL, CHIP 3.3M 5% 1/10W	

(VRA-5A BOARD(for UVW-1400, NTSC))

Ref. No. or Q'ty	Part No.	SP	Description
R501	1-216-085-00	s	METAL, CHIP 33k 5% 1/10W
R502	1-216-073-00	s	METAL, CHIP 10k 5% 1/10W
R503	1-216-667-11	s	METAL, CHIP 4.7k 0.5% 1/10W
R504	1-216-663-11	s	METAL, CHIP 3.3k 0.5% 1/10W
R505	1-216-065-00	s	METAL, CHIP 4.7k 5% 1/10W
R506	1-216-651-11	s	METAL, CHIP 1k 0.5% 1/10W
R507	1-216-651-11	s	METAL, CHIP 1k 0.5% 1/10W
R508	1-216-065-00	s	METAL, CHIP 4.7k 5% 1/10W
R509	1-216-641-11	s	METAL, CHIP 390 0.5% 1/10W
R510	1-216-663-11	s	METAL, CHIP 3.3k 0.5% 1/10W
R511	1-216-615-11	s	METAL, CHIP 33 0.5% 1/10W
R512	1-218-184-11	s	METAL, CHIP 997 0.1% 1/16W
R514	1-216-635-11	s	METAL, CHIP 220 0.5% 1/10W
R515	1-216-699-11	s	METAL, CHIP 100k 0.5% 1/10W
R516	1-218-922-11	s	METAL, CHIP 3.26k 0.10% 1/16W
R517	1-216-604-11	s	METAL, CHIP 11 0.5% 1/10W
R518	1-216-661-11	s	METAL, CHIP 2.7k 0.5% 1/10W
R519	1-216-057-00	s	METAL, CHIP 2.2k 5% 1/10W
R520	1-216-025-91	s	METAL, CHIP 100 5% 1/10W
R521	1-216-667-11	s	METAL, CHIP 4.7k 0.5% 1/10W
R522	1-216-655-11	s	METAL, CHIP 1.5k 0.5% 1/10W
R523	1-216-687-11	s	METAL, CHIP 33k 0.5% 1/10W
R524	1-216-295-91	s	RES, CHIP 0
R525	1-216-657-11	s	METAL, CHIP 1.8k 0.5% 1/10W
R526	1-216-682-11	s	METAL, CHIP 20k 0.5% 1/10W
R527	1-208-810-11	s	METAL, CHIP 15k 0.5% 1/10W
R528	1-216-295-91	s	RES, CHIP 0
R529	1-216-295-91	s	RES, CHIP 0
R530	1-216-687-11	s	METAL, CHIP 33k 0.5% 1/10W
R531	1-208-774-11	s	METAL, CHIP 470 5% 1/10W
R532	1-216-667-11	s	METAL, CHIP 4.7k 0.5% 1/10W
R533	1-208-774-11	s	METAL, CHIP 470 5% 1/10W
R534	1-216-025-91	s	METAL, CHIP 100 5% 1/10W
R535	1-216-025-91	s	METAL, CHIP 100 5% 1/10W
R536	1-216-057-00	s	METAL, CHIP 2.2k 5% 1/10W
R537	1-216-661-11	s	METAL, CHIP 2.7k 0.5% 1/10W
R538	1-216-657-11	s	METAL, CHIP 1.8k 0.5% 1/10W
R539	1-216-025-91	s	METAL, CHIP 100 5% 1/10W
R540	1-216-663-11	s	METAL, CHIP 3.3k 0.5% 1/10W
R541	1-216-659-11	s	METAL, CHIP 2.2k 0.5% 1/10W
R542	1-216-073-00	s	METAL, CHIP 10k 5% 1/10W
R543	1-216-073-00	s	METAL, CHIP 10k 5% 1/10W
R544	1-216-025-91	s	METAL, CHIP 100 5% 1/10W
R545	1-216-037-00	s	METAL, CHIP 330 5% 1/10W
R546	1-216-037-00	s	METAL, CHIP 330 5% 1/10W
R547	1-208-810-11	s	METAL, CHIP 15k 0.5% 1/10W
R548	1-208-806-11	s	METAL, CHIP 10k 0.5% 1/10W
R549	1-216-295-91	s	RES, CHIP 0
R550	1-216-013-00	s	METAL, CHIP 33 5% 1/10W
R551	1-216-013-00	s	METAL, CHIP 33 5% 1/10W
R552	1-216-065-00	s	METAL, CHIP 4.7k 5% 1/10W
R553	1-216-655-11	s	METAL, CHIP 1.5k 0.5% 1/10W
R554	1-208-814-11	s	METAL, CHIP 22k 0.5% 1/10W
R555	1-216-663-11	s	METAL, CHIP 3.3k 0.5% 1/10W
R556	1-216-667-11	s	METAL, CHIP 4.7k 0.5% 1/10W
R557	1-216-677-11	s	METAL, CHIP 12k 0.5% 1/10W
R558	1-216-065-00	s	METAL, CHIP 4.7k 5% 1/10W
R559	1-216-073-00	s	METAL, CHIP 10k 5% 1/10W
R560	1-216-073-00	s	METAL, CHIP 10k 5% 1/10W

Note: In this list * marked parts are design changed.
Refer to pages 18-29 to 18-31 for applicable serial numbers.

(VRA-5A BOARD(for UVW-1400, NTSC))

Ref. No. or Q'ty	Part No.	SP	Description
R561	1-216-665-11	s	METAL, CHIP 3.9k 0.5% 1/10W
R562	1-216-049-91	s	METAL, CHIP 1k 5% 1/10W
R563	1-216-025-91	s	METAL, CHIP 100 5% 1/10W
R564	1-208-806-11	s	METAL, CHIP 10k 0.5% 1/10W
R565	1-208-806-11	s	METAL, CHIP 10k 0.5% 1/10W
R601	1-216-085-00	s	METAL, CHIP 33k 5% 1/10W
R602	1-216-073-00	s	METAL, CHIP 10k 5% 1/10W
R603	1-216-667-11	s	METAL, CHIP 4.7k 0.5% 1/10W
R604	1-216-051-00	s	METAL, CHIP 1.2k 5% 1/10W
R605	1-216-663-11	s	METAL, CHIP 3.3k 0.5% 1/10W
R606	1-216-065-00	s	METAL, CHIP 4.7k 5% 1/10W
R607	1-216-651-11	s	METAL, CHIP 1k 0.5% 1/10W
R608	1-216-651-11	s	METAL, CHIP 1k 0.5% 1/10W
R609	1-216-065-00	s	METAL, CHIP 4.7k 5% 1/10W
R610	1-216-627-11	s	METAL, CHIP 100 0.5% 1/10W
R611	1-216-659-11	s	METAL, CHIP 2.2k 0.5% 1/10W
R612	1-216-611-11	s	METAL, CHIP 22 0.5% 1/10W
R613	1-218-184-11	s	METAL, CHIP 997 0.1% 1/16W
R614	1-208-806-11	s	METAL, CHIP 10k 0.5% 1/10W
R615	1-216-635-11	s	METAL, CHIP 220 0.5% 1/10W
R617	1-218-922-11	s	METAL, CHIP 3.26k 0.10% 1/16W
R618	1-216-603-11	s	METAL, CHIP 10 0.5% 1/10W
R619	1-216-661-11	s	METAL, CHIP 2.7k 0.5% 1/10W
R620	1-216-025-91	s	METAL, CHIP 100 5% 1/10W
R621	1-216-057-00	s	METAL, CHIP 2.2k 5% 1/10W
R622	1-216-667-11	s	METAL, CHIP 4.7k 0.5% 1/10W
R623	1-216-655-11	s	METAL, CHIP 1.5k 0.5% 1/10W
R624	1-216-687-11	s	METAL, CHIP 33k 0.5% 1/10W
R625	1-216-646-11	s	METAL, CHIP 620 0.5% 1/10W
R626	1-216-295-91	s	RES, CHIP 0
R627	1-216-682-11	s	METAL, CHIP 20k 0.5% 1/10W
R628	1-208-810-11	s	METAL, CHIP 15k 0.5% 1/10W
R629	1-216-651-11	s	METAL, CHIP 1k 0.5% 1/10W
R630	1-216-295-91	s	RES, CHIP 0
R631	1-216-687-11	s	METAL, CHIP 33k 0.5% 1/10W
R632	1-216-648-11	s	METAL, CHIP 750 0.5% 1/10W
R633	1-216-667-11	s	METAL, CHIP 4.7k 0.5% 1/10W
R634	1-216-041-00	s	METAL, CHIP 470 5% 1/10W
R635	1-216-025-91	s	METAL, CHIP 100 5% 1/10W
R636	1-216-073-00	s	METAL, CHIP 10k 5% 1/10W
R637	1-216-025-91	s	METAL, CHIP 100 5% 1/10W
R638	1-216-057-00	s	METAL, CHIP 2.2k 5% 1/10W
R639	1-208-775-11	s	METAL, CHIP 510 0.5% 1/10W
R640	1-216-646-11	s	METAL, CHIP 620 0.5% 1/10W
R641	1-208-775-11	s	METAL, CHIP 510 0.5% 1/10W
R642	1-216-651-11	s	METAL, CHIP 1k 0.5% 1/10W
R643	1-216-057-00	s	METAL, CHIP 2.2k 5% 1/10W
R644	1-216-041-00	s	METAL, CHIP 470 5% 1/10W
R645	1-216-049-91	s	METAL, CHIP 1k 5% 1/10W
R646	1-216-057-00	s	METAL, CHIP 2.2k 5% 1/10W
R647	1-216-049-91	s	METAL, CHIP 1k 5% 1/10W
R648	1-216-025-91	s	METAL, CHIP 100 5% 1/10W
R649	1-216-025-91	s	METAL, CHIP 100 5% 1/10W
R650	1-216-037-00	s	METAL, CHIP 330 5% 1/10W
R651	1-216-037-00	s	METAL, CHIP 330 5% 1/10W
R652	1-216-013-00	s	METAL, CHIP 33 5% 1/10W
R653	1-216-013-00	s	METAL, CHIP 33 5% 1/10W
R654	1-216-667-11	s	METAL, CHIP 4.7k 0.5% 1/10W
R655	1-216-663-11	s	METAL, CHIP 3.3k 0.5% 1/10W

(VRA-5A BOARD(for UVW-1400, NTSC))

Ref. No. or Q'ty	Part No.	SP	Description
R656	1-216-025-91	s	METAL, CHIP 100 5% 1/10W
R657	1-208-806-11	s	METAL, CHIP 10k 0.5% 1/10W
R658	1-208-806-11	s	METAL, CHIP 10k 0.5% 1/10W
R701	1-216-025-91	s	METAL, CHIP 100 5% 1/10W
R702	1-216-049-91	s	METAL, CHIP 1k 5% 1/10W
R703	1-208-625-11	s	METAL, CHIP 2.25k 0.1% 1/16W
R704	1-208-627-11	s	METAL, CHIP 4.41k 0.1% 1/16W
R705	1-208-630-11	s	METAL, CHIP 11.49 0.1% 1/16W
R706	1-216-049-91	s	METAL, CHIP 1k 5% 1/10W
R708	1-216-025-91	s	METAL, CHIP 100 5% 1/10W
R709	1-216-049-91	s	METAL, CHIP 1k 5% 1/10W
R710	1-216-657-11	s	METAL, CHIP 1.8k 0.5% 1/10W
R711	1-208-625-11	s	METAL, CHIP 2.25k 0.1% 1/16W
R712	1-208-630-11	s	METAL, CHIP 11.49 0.1% 1/16W
R713	1-216-057-00	s	METAL, CHIP 2.2k 5% 1/10W
R714	1-216-055-00	s	METAL, CHIP 1.8k 5% 1/10W
R715	1-218-477-11	s	METAL, CHIP 220 5% 1/4W
R716	1-208-789-11	s	METAL, CHIP 2k 0.5% 1/10W
R717	1-208-774-11	s	METAL, CHIP 470 5% 1/10W
R718	1-208-774-11	s	METAL, CHIP 470 5% 1/10W
R719	1-216-041-00	s	METAL, CHIP 470 5% 1/10W
R720	1-216-049-91	s	METAL, CHIP 1k 5% 1/10W
R721	1-216-049-91	s	METAL, CHIP 1k 5% 1/10W
R722	1-216-025-91	s	METAL, CHIP 100 5% 1/10W
R723	1-216-049-91	s	METAL, CHIP 1k 5% 1/10W
R724	1-208-623-11	s	METAL, CHIP 1.43k 0.1% 1/16W
R725	1-208-625-11	s	METAL, CHIP 2.25k 0.1% 1/16W
R726	1-208-627-11	s	METAL, CHIP 4.41k 0.1% 1/16W
R727	1-216-057-00	s	METAL, CHIP 2.2k 5% 1/10W
R728	1-216-055-00	s	METAL, CHIP 1.8k 5% 1/10W
R729	1-218-477-11	s	METAL, CHIP 220 5% 1/4W
R730	1-208-789-11	s	METAL, CHIP 2k 0.5% 1/10W
R731	1-208-774-11	s	METAL, CHIP 470 5% 1/10W
R732	1-208-774-11	s	METAL, CHIP 470 5% 1/10W
R733	1-216-041-00	s	METAL, CHIP 470 5% 1/10W
R734	1-216-049-91	s	METAL, CHIP 1k 5% 1/10W
R735	1-216-049-91	s	METAL, CHIP 1k 5% 1/10W
R736	1-216-625-11	s	METAL, CHIP 82 0.5% 1/10W
R737	1-216-625-11	s	METAL, CHIP 82 0.5% 1/10W
R738	1-216-622-11	s	METAL, CHIP 62 0.5% 1/10W
R739	1-216-625-11	s	METAL, CHIP 82 0.5% 1/10W
R740	1-216-025-91	s	METAL, CHIP 100 5% 1/10W
R741	1-216-025-91	s	METAL, CHIP 100 5% 1/10W
R742	1-216-041-00	s	METAL, CHIP 470 5% 1/10W
R743	1-216-057-00	s	METAL, CHIP 2.2k 5% 1/10W
R744	1-216-045-00	s	METAL, CHIP 680 5% 1/10W
R745	1-216-041-00	s	METAL, CHIP 470 5% 1/10W
R746	1-216-667-11	s	METAL, CHIP 4.7k 0.5% 1/10W
R747	1-216-627-11	s	METAL, CHIP 100 0.5% 1/10W
R748	1-216-057-00	s	METAL, CHIP 2.2k 5% 1/10W
R749	1-216-657-11	s	METAL, CHIP 1.8k 0.5% 1/10W
R750	1-216-045-00	s	METAL, CHIP 680 5% 1/10W
R751	1-216-651-11	s	METAL, CHIP 1k 0.5% 1/10W
R752	1-216-057-00	s	METAL, CHIP 2.2k 5% 1/10W
R753	1-216-057-00	s	METAL, CHIP 2.2k 5% 1/10W
R754	1-216-648-11	s	METAL, CHIP 750 0.5% 1/10W
R755	1-208-806-11	s	METAL, CHIP 10k 0.5% 1/10W
R756	1-216-671-11	s	METAL, CHIP 6.8k 0.5% 1/10W
R801	1-216-097-91	s	METAL, CHIP 100k 5% 1/10W

Note: In this list * marked parts are design changed.
Refer to pages 18-29 to 18-31 for applicable serial numbers.

(VRA-5A BOARD(for UVW-1400, NTSC))

Ref. No. or Q'ty	Part No.	SP	Description
R802	1-216-073-00	s	METAL, CHIP 10k 5% 1/10W
R803	1-216-073-00	s	METAL, CHIP 10k 5% 1/10W
R804	1-216-065-00	s	METAL, CHIP 4.7k 5% 1/10W
R805	1-216-025-91	s	METAL, CHIP 100 5% 1/10W
R806	1-216-639-11	s	METAL, CHIP 330 0.5% 1/10W
R807	1-208-774-11	s	METAL, CHIP 470 5% 1/10W
R808	1-216-025-91	s	METAL, CHIP 100 5% 1/10W
R809	1-208-810-11	s	METAL, CHIP 15k 0.5% 1/10W
R810	1-208-810-11	s	METAL, CHIP 15k 0.5% 1/10W
R811	1-216-073-00	s	METAL, CHIP 10k 5% 1/10W
R812	1-216-646-11	s	METAL, CHIP 620 0.5% 1/10W
R813	1-216-025-91	s	METAL, CHIP 100 5% 1/10W
R814	1-216-065-00	s	METAL, CHIP 4.7k 5% 1/10W
R815	1-216-065-00	s	METAL, CHIP 4.7k 5% 1/10W
R816	1-216-089-91	s	METAL, CHIP 47k 5% 1/10W
R817	1-216-073-00	s	METAL, CHIP 10k 5% 1/10W
R818	1-216-073-00	s	METAL, CHIP 10k 5% 1/10W
RV101	1-241-760-11	s	RES, ADJ METAL 470
RV102	1-241-760-11	s	RES, ADJ METAL 470
RV103	1-241-762-11	s	RES, ADJ METAL 2.2k
RV104	1-241-760-11	s	RES, ADJ METAL 470
RV105	1-241-759-21	s	RES, ADJ METAL 220
RV201	1-241-784-11	s	RES, ADJ METAL 4.7k
RV202	1-241-785-11	s	RES, ADJ METAL 10k
RV203	1-241-785-11	s	RES, ADJ METAL 10k
RV301	1-241-762-11	s	RES, ADJ METAL 2.2k
RV302	1-241-785-11	s	RES, ADJ METAL 10k
RV303	1-241-784-11	s	RES, ADJ METAL 4.7k
RV304	1-241-784-11	s	RES, ADJ METAL 4.7k
RV305	1-241-784-11	s	RES, ADJ METAL 4.7k
RV306	1-241-762-11	s	RES, ADJ METAL 2.2k
RV501	1-241-761-11	s	RES, ADJ METAL 1k
RV502	1-241-762-11	s	RES, ADJ METAL 2.2k
RV503	1-241-762-11	s	RES, ADJ METAL 2.2k
RV602	1-241-763-11	s	RES, ADJ METAL 4.7k
RV603	1-241-763-11	s	RES, ADJ METAL 4.7k
RV701	1-241-760-11	s	RES, ADJ METAL 470
RV702	1-241-761-11	s	RES, ADJ METAL 1k
RV703	1-241-761-11	s	RES, ADJ METAL 1k
S201	1-571-275-31	s	SWITCH, SLIDE
TH201	1-807-972-11	s	THERMISTOR SV-1715 1.25k
X301	1-527-722-00	s	CRYSTAL 14.31818MHz
X302	1-760-109-21	s	CRYSTAL 10.738635MHz

VRA-5AP BOARD(for UVW-1400P, PAL)

Ref. No. or Q'ty	Part No.	SP	Description	
VRA-5AP board is used for UVW-1400P.				
1pc	A-8275-604-A	o	MOUNTED CIRCUIT BOARD, VRA-5AP	
1pc	3-182-386-02	o	PLATE, SHIELD (L), CARD	
1pc	7-621-759-45	s	SCREW, +PSW2.6x6	
1pc	8-752-036-77	s	IC CXA1179N	
1pc	3-179-084-01	s	LEVER (R), PC BOARD	
1pc	3-179-085-01	s	LEVER (L), PC BOARD	
C101	1-126-933-11	s	ELECT 100uF 20% 16V	
C102	1-126-933-11	s	ELECT 100uF 20% 16V	
C103	1-163-033-91	s	CERAMIC, CHIP 0.022uF 50V	
C104	1-163-033-91	s	CERAMIC, CHIP 0.022uF 50V	
C105	1-164-004-11	s	CERAMIC, CHIP 0.1uF 10% 25V	
C106	1-126-925-11	s	ELECT 470uF 20% 10V	
C107	1-126-925-11	s	ELECT 470uF 20% 10V	
C108	1-163-033-91	s	CERAMIC, CHIP 0.022uF 50V	
C109	1-126-925-11	s	ELECT 470uF 20% 10V	
C110	1-163-033-91	s	CERAMIC, CHIP 0.022uF 50V	
C111	1-131-347-00	s	TANTALUM 1uF 10% 35V	
C112	1-163-033-91	s	CERAMIC, CHIP 0.022uF 50V	
C113	1-163-033-91	s	CERAMIC, CHIP 0.022uF 50V	
C114	1-163-033-91	s	CERAMIC, CHIP 0.022uF 50V	
C115	1-126-933-11	s	ELECT 100uF 20% 16V	
C116	1-126-933-11	s	ELECT 100uF 20% 16V	
C117	1-163-033-91	s	CERAMIC, CHIP 0.022uF 50V	
C118	1-163-033-91	s	CERAMIC, CHIP 0.022uF 50V	
C119	1-126-933-11	s	ELECT 100uF 20% 16V	
C121	1-163-227-11	s	CERAMIC, CHIP 10pF 5% 50V	
C122	1-163-231-11	s	CERAMIC, CHIP 15pF 5% 50V	
C123	1-163-231-11	s	CERAMIC, CHIP 15pF 5% 50V	
C124	1-163-033-91	s	CERAMIC, CHIP 0.022uF 50V	
C125	1-163-033-91	s	CERAMIC, CHIP 0.022uF 50V	
C126	1-163-033-91	s	CERAMIC, CHIP 0.022uF 50V	
C127	1-126-933-11	s	ELECT 100uF 20% 16V	
C128	1-131-381-00	s	TANTALUM 47uF 10% 10V	
C129	1-131-381-00	s	TANTALUM 47uF 10% 10V	
C130	1-131-353-00	s	TANTALUM 10uF 10% 35V	
C131	1-131-381-00	s	TANTALUM 47uF 10% 10V	
C132	1-131-381-00	s	TANTALUM 47uF 10% 10V	
C133	1-163-033-91	s	CERAMIC, CHIP 0.022uF 50V	
C134	1-163-033-91	s	CERAMIC, CHIP 0.022uF 50V	
C135	1-131-353-00	s	TANTALUM 10uF 10% 35V	
C136	1-163-033-91	s	CERAMIC, CHIP 0.022uF 50V	
C137	1-126-933-11	s	ELECT 100uF 20% 16V	
C138	1-163-227-11	s	CERAMIC, CHIP 10pF 5% 50V	
C140	1-163-235-11	s	CERAMIC, CHIP 22pF 5% 50V	
C141	1-163-231-11	s	CERAMIC, CHIP 15pF 5% 50V	
C142	1-163-033-91	s	CERAMIC, CHIP 0.022uF 50V	
C143	1-163-033-91	s	CERAMIC, CHIP 0.022uF 50V	
C144	1-163-033-91	s	CERAMIC, CHIP 0.022uF 50V	
C145	1-163-235-11	s	CERAMIC, CHIP 22pF 5% 50V	
C146	1-126-933-11	s	ELECT 100uF 20% 16V	
C147	1-126-933-11	s	ELECT 100uF 20% 16V	
C148	1-126-933-11	s	ELECT 100uF 20% 16V	
C200	1-163-033-91	s	CERAMIC, CHIP 0.022uF 50V	
*C201	1-163-227-11	s	CERAMIC, CHIP 10pF 5% 50V	*24
*C202	1-163-243-11	s	CERAMIC, CHIP 47pF 5% 50V	*24
	1-164-232-11	s	CERAMIC, CHIP 0.01uF 10% 100V	*25

Note: In this list * marked parts are design changed.
Refer to pages 18-29 to 18-31 for applicable serial numbers.

(VRA-5AP BOARD(for UVW-1400P, PAL))

Ref. No. or Q'ty	Part No.	SP	Description	
*C203	1-163-243-11	s	CERAMIC, CHIP 47pF 5% 50V	*24
	1-163-099-00	s	CERAMIC, CHIP 18pF 5% 50V	*25
C204	1-163-237-11	s	CERAMIC, CHIP 27pF 5% 50V	
C205	1-163-253-11	s	CERAMIC, CHIP 120pF 5% 50V	
C206	1-163-253-11	s	CERAMIC, CHIP 120pF 5% 50V	
C207	1-126-933-11	s	ELECT 100uF 20% 16V	
C208	1-163-251-11	s	CERAMIC, CHIP 100pF 5% 50V	
C209	1-163-251-11	s	CERAMIC, CHIP 100pF 5% 50V	
C210	1-163-251-11	s	CERAMIC, CHIP 100pF 5% 50V	
C211	1-163-251-11	s	CERAMIC, CHIP 100pF 5% 50V	
C217	1-163-033-91	s	CERAMIC, CHIP 0.022uF 50V	
C218	1-163-133-00	s	CERAMIC, CHIP 470pF 5% 50V	
C219	1-163-033-91	s	CERAMIC, CHIP 0.022uF 50V	
C220	1-163-139-00	s	CERAMIC, CHIP 820pF 5% 50V	
C221	1-163-033-91	s	CERAMIC, CHIP 0.022uF 50V	
C222	1-163-033-91	s	CERAMIC, CHIP 0.022uF 50V	
C223	1-126-925-11	s	ELECT 470uF 20% 10V	
C224	1-126-925-11	s	ELECT 470uF 20% 10V	
C225-234	1-163-033-91	s	CERAMIC, CHIP 0.022uF 50V	
C238	1-163-033-91	s	CERAMIC, CHIP 0.022uF 50V	
C239	1-163-033-91	s	CERAMIC, CHIP 0.022uF 50V	
C240	1-126-933-11	s	ELECT 100uF 20% 16V	
C241-251	1-163-033-91	s	CERAMIC, CHIP 0.022uF 50V	
C252	1-126-933-11	s	ELECT 100uF 20% 16V	
C253-258	1-163-033-91	s	CERAMIC, CHIP 0.022uF 50V	
C259	1-163-251-11	s	CERAMIC, CHIP 100pF 5% 50V	
C260	1-163-251-11	s	CERAMIC, CHIP 100pF 5% 50V	
C261	1-126-933-11	s	ELECT 100uF 20% 16V	
C262	1-126-933-11	s	ELECT 100uF 20% 16V	
C263	1-163-033-91	s	CERAMIC, CHIP 0.022uF 50V	
C264	1-163-033-91	s	CERAMIC, CHIP 0.022uF 50V	
C265	1-163-251-11	s	CERAMIC, CHIP 100pF 5% 50V	
*C266	1-163-227-11	s	CERAMIC, CHIP 10pF 5% 50V	*32
C267	1-163-139-00	s	CERAMIC, CHIP 820pF 5% 50V	
C268	1-163-139-00	s	CERAMIC, CHIP 820pF 5% 50V	
C269	1-163-251-11	s	CERAMIC, CHIP 100pF 5% 50V	
C270	1-164-161-11	s	CERAMIC, CHIP 0.0022uF 10% 100V	
C271	1-163-033-91	s	CERAMIC, CHIP 0.022uF 50V	
C301	1-126-933-11	s	ELECT 100uF 20% 16V	
C302	1-126-933-11	s	ELECT 100uF 20% 16V	
C303	1-163-033-91	s	CERAMIC, CHIP 0.022uF 50V	
C304	1-163-033-91	s	CERAMIC, CHIP 0.022uF 50V	
C305	1-126-933-11	s	ELECT 100uF 20% 16V	
C306	1-163-033-91	s	CERAMIC, CHIP 0.022uF 50V	
C307	1-163-249-11	s	CERAMIC, CHIP 82pF 5% 50V	
C308	1-163-033-91	s	CERAMIC, CHIP 0.022uF 50V	
C309	1-163-033-91	s	CERAMIC, CHIP 0.022uF 50V	
C310	1-163-235-11	s	CERAMIC, CHIP 22pF 5% 50V	
C311	1-163-235-11	s	CERAMIC, CHIP 22pF 5% 50V	
C312	1-131-353-00	s	TANTALUM 10uF 10% 35V	
C313	1-164-004-11	s	CERAMIC, CHIP 0.1uF 10% 25V	
C314	1-163-033-91	s	CERAMIC, CHIP 0.022uF 50V	
C316	1-163-125-00	s	CERAMIC, CHIP 220pF 5% 50V	
C317	1-163-033-91	s	CERAMIC, CHIP 0.022uF 50V	
C318	1-163-033-91	s	CERAMIC, CHIP 0.022uF 50V	
C319	1-163-033-91	s	CERAMIC, CHIP 0.022uF 50V	
C320	1-126-933-11	s	ELECT 100uF 20% 16V	
C321	1-126-933-11	s	ELECT 100uF 20% 16V	

(VRA-5AP BOARD(for UVW-1400P, PAL))

Ref. No. or Q'ty	Part No.	SP	Description
C322	1-126-933-11	s	ELECT 100uF 20% 16V
C323	1-163-239-11	s	CERAMIC, CHIP 33pF 5% 50V
C324	1-163-263-11	s	CERAMIC, CHIP 330pF 5% 50V
C325	1-163-121-00	s	CERAMIC, CHIP 150pF 5% 50V
C326	1-164-004-11	s	CERAMIC, CHIP 0.1uF 10% 25V
C327	1-164-004-11	s	CERAMIC, CHIP 0.1uF 10% 25V
C328	1-163-033-91	s	CERAMIC, CHIP 0.022uF 50V
C329	1-163-033-91	s	CERAMIC, CHIP 0.022uF 50V
C330	1-126-933-11	s	ELECT 100uF 20% 16V
C331	1-163-017-00	s	CERAMIC, CHIP 0.0047uF 5% 50V
C332	1-163-017-00	s	CERAMIC, CHIP 0.0047uF 5% 50V
C333	1-163-033-91	s	CERAMIC, CHIP 0.022uF 50V
C334	1-163-033-91	s	CERAMIC, CHIP 0.022uF 50V
C335	1-126-933-11	s	ELECT 100uF 20% 16V
C336	1-163-033-91	s	CERAMIC, CHIP 0.022uF 50V
C337	1-163-033-91	s	CERAMIC, CHIP 0.022uF 50V
C338	1-163-133-00	s	CERAMIC, CHIP 470pF 5% 50V
C339	1-163-251-11	s	CERAMIC, CHIP 100pF 5% 50V
C340	1-163-033-91	s	CERAMIC, CHIP 0.022uF 50V
C341	1-126-933-11	s	ELECT 100uF 20% 16V
C342	1-163-033-91	s	CERAMIC, CHIP 0.022uF 50V
C343	1-163-033-91	s	CERAMIC, CHIP 0.022uF 50V
C344	1-163-121-00	s	CERAMIC, CHIP 150pF 5% 50V
C345	1-163-033-91	s	CERAMIC, CHIP 0.022uF 50V
C346	1-164-004-11	s	CERAMIC, CHIP 0.1uF 10% 25V
C347	1-164-004-11	s	CERAMIC, CHIP 0.1uF 10% 25V
C348	1-163-235-11	s	CERAMIC, CHIP 22pF 5% 50V
C349	1-163-239-11	s	CERAMIC, CHIP 33pF 5% 50V
C350	1-126-933-11	s	ELECT 100uF 20% 16V
C351	1-163-033-91	s	CERAMIC, CHIP 0.022uF 50V
C352	1-163-133-00	s	CERAMIC, CHIP 470pF 5% 50V
C353	1-126-933-11	s	ELECT 100uF 20% 16V
C354	1-163-121-00	s	CERAMIC, CHIP 150pF 5% 50V
C355	1-163-033-91	s	CERAMIC, CHIP 0.022uF 50V
C356	1-163-089-00	s	CERAMIC, CHIP 6pF 50V
C357	1-163-033-91	s	CERAMIC, CHIP 0.022uF 50V
C358	1-164-004-11	s	CERAMIC, CHIP 0.1uF 10% 25V
C359	1-163-033-91	s	CERAMIC, CHIP 0.022uF 50V
C360	1-164-004-11	s	CERAMIC, CHIP 0.1uF 10% 25V
C361	1-163-241-11	s	CERAMIC, CHIP 39pF 5% 50V
C362	1-163-033-91	s	CERAMIC, CHIP 0.022uF 50V
C363	1-163-231-11	s	CERAMIC, CHIP 15pF 5% 50V
C364	1-163-033-91	s	CERAMIC, CHIP 0.022uF 50V
C365	1-126-933-11	s	ELECT 100uF 20% 16V
C366	1-163-263-11	s	CERAMIC, CHIP 330pF 5% 50V
C367	1-163-033-91	s	CERAMIC, CHIP 0.022uF 50V
C368	1-126-933-11	s	ELECT 100uF 20% 16V
C369	1-163-033-91	s	CERAMIC, CHIP 0.022uF 50V
C370	1-163-017-00	s	CERAMIC, CHIP 0.0047uF 5% 50V
C371	1-126-933-11	s	ELECT 100uF 20% 16V
C372	1-163-033-91	s	CERAMIC, CHIP 0.022uF 50V
C373	1-163-033-91	s	CERAMIC, CHIP 0.022uF 50V
C374	1-163-033-91	s	CERAMIC, CHIP 0.022uF 50V
C375	1-163-220-11	s	CERAMIC, CHIP 3pF 50V
C376	1-163-227-11	s	CERAMIC, CHIP 10pF 5% 50V
C377	1-126-933-11	s	ELECT 100uF 20% 16V
C378	1-126-933-11	s	ELECT 100uF 20% 16V
C379	1-163-131-00	s	CERAMIC, CHIP 390pF 5% 50V
C380	1-163-251-11	s	CERAMIC, CHIP 100pF 5% 50V

Note: In this list * marked parts are design changed.
Refer to pages 18-29 to 18-31 for applicable serial numbers.

(VRA-5AP BOARD(for UVW-1400P, PAL))

Ref. No. or Q'ty	Part No.	SP	Description
C381	1-163-033-91	s	CERAMIC, CHIP 0.022uF 50V
C382	1-163-251-11	s	CERAMIC, CHIP 100pF 5% 50V
C383	1-164-004-11	s	CERAMIC, CHIP 0.1uF 10% 25V
C384	1-163-033-91	s	CERAMIC, CHIP 0.022uF 50V
C385	1-163-139-00	s	CERAMIC, CHIP 820pF 5% 50V
C386	1-163-033-91	s	CERAMIC, CHIP 0.022uF 50V
C387	1-163-033-91	s	CERAMIC, CHIP 0.022uF 50V
C388	1-163-251-11	s	CERAMIC, CHIP 100pF 5% 50V
C389	1-126-933-11	s	ELECT 100uF 20% 16V
C390	1-163-033-91	s	CERAMIC, CHIP 0.022uF 50V
C391	1-163-033-91	s	CERAMIC, CHIP 0.022uF 50V
C392	1-163-089-00	s	CERAMIC, CHIP 6pF 50V
C393	1-163-099-00	s	CERAMIC, CHIP 18pF 5% 50V
C394	1-163-241-11	s	CERAMIC, CHIP 39pF 5% 50V
C395	1-126-933-11	s	ELECT 100uF 20% 16V
C396	1-163-102-00	s	CERAMIC, CHIP 24pF 5% 50V
C397	1-163-251-11	s	CERAMIC, CHIP 100pF 5% 50V
C398	1-164-232-11	s	CERAMIC, CHIP 0.01uF 10% 100V
C399	1-163-263-11	s	CERAMIC, CHIP 330pF 5% 50V
C501	1-126-933-11	s	ELECT 100uF 20% 16V
C502	1-126-933-11	s	ELECT 100uF 20% 16V
C503	1-126-933-11	s	ELECT 100uF 20% 16V
C504	1-163-033-91	s	CERAMIC, CHIP 0.022uF 50V
C505	1-163-033-91	s	CERAMIC, CHIP 0.022uF 50V
C506	1-163-102-00	s	CERAMIC, CHIP 24pF 5% 50V
C507	1-163-257-11	s	CERAMIC, CHIP 180pF 5% 50V
C508	1-126-933-11	s	ELECT 100uF 20% 16V
C509	1-126-933-11	s	ELECT 100uF 20% 16V
C510	1-163-033-91	s	CERAMIC, CHIP 0.022uF 50V
C511	1-104-923-11	s	MICA, CHIP 180pF 0.25% 50V
C513	1-163-091-00	s	CERAMIC, CHIP 8pF 50V
C514	1-163-235-11	s	CERAMIC, CHIP 22pF 5% 50V
C515	1-163-091-00	s	CERAMIC, CHIP 8pF 50V
C516	1-163-227-11	s	CERAMIC, CHIP 10pF 5% 50V
C517	1-163-033-91	s	CERAMIC, CHIP 0.022uF 50V
C518	1-163-033-91	s	CERAMIC, CHIP 0.022uF 50V
C519	1-163-033-91	s	CERAMIC, CHIP 0.022uF 50V
C520	1-163-033-91	s	CERAMIC, CHIP 0.022uF 50V
C521	1-131-353-00	s	TANTALUM 10uF 10% 35V
C522	1-163-102-00	s	CERAMIC, CHIP 24pF 5% 50V
C523	1-126-933-11	s	ELECT 100uF 20% 16V
C524	1-163-033-91	s	CERAMIC, CHIP 0.022uF 50V
C525	1-164-004-11	s	CERAMIC, CHIP 0.1uF 10% 25V
C526	1-163-033-91	s	CERAMIC, CHIP 0.022uF 50V
C527	1-163-033-91	s	CERAMIC, CHIP 0.022uF 50V
C528	1-163-033-91	s	CERAMIC, CHIP 0.022uF 50V
C529	1-163-033-91	s	CERAMIC, CHIP 0.022uF 50V
C530	1-163-275-11	s	CERAMIC, CHIP 0.001uF 5% 50V
C531	1-164-161-11	s	CERAMIC, CHIP 0.0022uF 10% 100V
C603	1-126-933-11	s	ELECT 100uF 20% 16V
C604	1-163-033-91	s	CERAMIC, CHIP 0.022uF 50V
C605	1-163-033-91	s	CERAMIC, CHIP 0.022uF 50V
C606	1-163-099-00	s	CERAMIC, CHIP 18pF 5% 50V
C607	1-163-125-00	s	CERAMIC, CHIP 220pF 5% 50V
C608	1-126-933-11	s	ELECT 100uF 20% 16V
C609	1-126-933-11	s	ELECT 100uF 20% 16V
C610	1-163-033-91	s	CERAMIC, CHIP 0.022uF 50V
C611	1-104-923-11	s	MICA, CHIP 180pF 0.25% 50V
C613	1-163-091-00	s	CERAMIC, CHIP 8pF 50V

(VRA-5AP BOARD(for UVW-1400P, PAL))

Ref. No. or Q'ty	Part No.	SP	Description
C614	1-163-227-11	s	CERAMIC, CHIP 10pF 5% 50V
C615	1-163-091-00	s	CERAMIC, CHIP 8pF 50V
C616	1-163-227-11	s	CERAMIC, CHIP 10pF 5% 50V
C617	1-163-033-91	s	CERAMIC, CHIP 0.022uF 50V
C618	1-163-033-91	s	CERAMIC, CHIP 0.022uF 50V
C619	1-163-033-91	s	CERAMIC, CHIP 0.022uF 50V
C620	1-163-033-91	s	CERAMIC, CHIP 0.022uF 50V
C621	1-131-353-00	s	TANTALUM 10uF 10% 35V
C622	1-163-139-00	s	CERAMIC, CHIP 820pF 5% 50V
C623	1-163-139-00	s	CERAMIC, CHIP 820pF 5% 50V
C624	1-163-033-91	s	CERAMIC, CHIP 0.022uF 50V
C625	1-126-933-11	s	ELECT 100uF 20% 16V
C626	1-163-033-91	s	CERAMIC, CHIP 0.022uF 50V
C627	1-163-033-91	s	CERAMIC, CHIP 0.022uF 50V
C628	1-163-033-91	s	CERAMIC, CHIP 0.022uF 50V
C631	1-126-933-11	s	ELECT 100uF 20% 16V
C632	1-163-033-91	s	CERAMIC, CHIP 0.022uF 50V
C701	1-126-933-11	s	ELECT 100uF 20% 16V
C702	1-126-933-11	s	ELECT 100uF 20% 16V
C703	1-126-933-11	s	ELECT 100uF 20% 16V
C704	1-126-933-11	s	ELECT 100uF 20% 16V
C705	1-131-347-00	s	TANTALUM 1uF 10% 35V
C706	1-163-033-91	s	CERAMIC, CHIP 0.022uF 50V
C708	1-126-933-11	s	ELECT 100uF 20% 16V
C709	1-163-125-00	s	CERAMIC, CHIP 220pF 5% 50V
C710	1-163-125-00	s	CERAMIC, CHIP 220pF 5% 50V
C711	1-163-033-91	s	CERAMIC, CHIP 0.022uF 50V
C712	1-163-033-91	s	CERAMIC, CHIP 0.022uF 50V
C713	1-163-251-11	s	CERAMIC, CHIP 100pF 5% 50V
C714	1-163-251-11	s	CERAMIC, CHIP 100pF 5% 50V
C803	1-126-933-11	s	ELECT 100uF 20% 16V
C809	1-163-033-91	s	CERAMIC, CHIP 0.022uF 50V
C901	1-126-933-11	s	ELECT 100uF 20% 16V
C902	1-126-933-11	s	ELECT 100uF 20% 16V
C903	1-163-033-91	s	CERAMIC, CHIP 0.022uF 50V
C904	1-163-033-91	s	CERAMIC, CHIP 0.022uF 50V
C905	1-126-933-11	s	ELECT 100uF 20% 16V
C906	1-126-933-11	s	ELECT 100uF 20% 16V
C907	1-163-033-91	s	CERAMIC, CHIP 0.022uF 50V
C908	1-163-033-91	s	CERAMIC, CHIP 0.022uF 50V
C909	1-126-933-11	s	ELECT 100uF 20% 16V
C910	1-163-033-91	s	CERAMIC, CHIP 0.022uF 50V
C911	1-126-933-11	s	ELECT 100uF 20% 16V
C912	1-126-933-11	s	ELECT 100uF 20% 16V
C913	1-163-033-91	s	CERAMIC, CHIP 0.022uF 50V
C914	1-163-033-91	s	CERAMIC, CHIP 0.022uF 50V
C915	1-126-933-11	s	ELECT 100uF 20% 16V
C916	1-163-033-91	s	CERAMIC, CHIP 0.022uF 50V
C917	1-126-933-11	s	ELECT 100uF 20% 16V
C918	1-163-033-91	s	CERAMIC, CHIP 0.022uF 50V
CN101	1-573-782-21	o	CONNECTOR, PHEC 60P, MALE
CN102	1-573-782-21	o	CONNECTOR, PHEC 60P, MALE
CV301	1-141-442-91	s	CAP, TRIMMER 20pF
D101	8-719-941-23	s	DIODE DA204U
D102	8-719-941-23	s	DIODE DA204U
D109	8-719-123-82	s	DIODE 1SS303-T1
D202	8-719-123-82	s	DIODE 1SS303-T1
D301	8-719-041-39	s	DIODE KV1470

Note: In this list * marked parts are design changed.
Refer to pages 18-29 to 18-31 for applicable serial numbers.

(VRA-5AP BOARD(for UVW-1400P, PAL))

Ref. No. or Q'ty	Part No.	SP	Description	
D302	8-719-941-23	s	DIODE DA204U	
D303	8-719-821-39	s	DIODE 1SV160	
*D305	8-713-300-88	s	DIODE 1T33C-01	*31
	8-719-002-81	s	DIODE 1T363A-M20-T8A	*32
D306	8-719-941-23	s	DIODE DA204U	
*D307	8-719-941-23	s	DIODE DA204U	*32
D701	8-719-105-38	s	DIODE RD3.0M-B1	
FB201	1-543-309-21	s	BEAD, FERRITE	
FL101	1-239-769-11	s	FILTER, LOW-PASS 5MHz	
FL102	1-239-313-11	s	FILTER, LOW-PASS 2MHz	
FL103	1-239-313-11	s	FILTER, LOW-PASS 2MHz	
FL201	1-239-769-11	s	FILTER, LOW-PASS 5MHz	
FL202	1-239-801-11	s	FILTER, LOW-PASS 4MHz	
IC101	8-759-300-71	s	IC HD14053BFP	
IC102	8-759-300-71	s	IC HD14053BFP	
IC103	8-759-908-92	s	IC TL084CNS	
IC104	8-759-925-76	s	IC SN74HC08ANS	
IC201	8-759-925-90	s	IC SN74HC74ANS	
IC202	8-759-300-71	s	IC HD14053BFP	
IC203	8-759-927-46	s	IC SN74HC00ANS	
IC205	8-759-085-99	s	IC MB40568PF-G-BND	
IC206	8-759-085-99	s	IC MB40568PF-G-BND	
IC207	8-759-035-93	s	IC TC7S32F-TE85L	
*IC208	8-759-113-97	s	IC UPD42505C-50	*31
	8-759-277-19	s	IC UPD485505G-35	*32
*IC209	8-759-113-97	s	IC UPD42505C-50	*31
	8-759-277-19	s	IC UPD485505G-35	*32
IC210	8-759-513-76	s	IC CXD8161AQ	
IC211	8-759-031-84	s	IC TC7S04F	
IC212	8-752-329-28	s	IC CXD1151Q	
IC213	8-752-363-43	s	IC CXD1171M-1-TH	
IC214	8-752-363-43	s	IC CXD1171M-1-TH	
IC215	8-759-300-71	s	IC HD14053BFP	
IC216	8-759-907-81	s	IC SN74LS221NS	
IC218	8-759-925-85	s	IC SN74HC32ANS	
IC220	8-759-300-71	s	IC HD14053BFP	
IC301	8-759-008-67	s	IC MC14066BF	
IC302	8-752-339-04	s	IC CXD2208Q	
IC303	8-759-908-92	s	IC TL084CNS	
IC304	8-759-906-53	s	IC TL062CPS	
IC305	8-759-031-84	s	IC TC7S04F	
IC306	8-759-908-92	s	IC TL084CNS	
IC307	8-759-031-84	s	IC TC7S04F	
IC308	8-759-906-53	s	IC TL062CPS	
IC309	8-759-300-71	s	IC HD14053BFP	
IC310	8-759-520-55	s	IC CXD8243AM	
IC311	8-759-008-67	s	IC MC14066BF	
IC312	8-759-907-81	s	IC SN74LS221NS	
IC313	8-759-239-58	s	IC TC74HC221AF	
IC314	8-759-009-06	s	IC MC14052BF	
IC315	8-759-908-15	s	IC TL431CLP	
IC316	8-759-908-15	s	IC TL431CLP	
IC317	8-759-031-84	s	IC TC7S04F	
IC501	1-810-334-11	s	HIC BP-023	
IC502	8-759-908-15	s	IC TL431CLP	
IC601	1-810-334-11	s	HIC BP-023	
IC602	8-759-908-15	s	IC TL431CLP	

(VRA-5AP BOARD(for UVW-1400P, PAL))

Ref. No. or Q'ty	Part No.	SP	Description		
IC701	8-759-300-71	s	IC HD14053BFP		
IC702	8-752-052-82	s	IC CXA1432M		
IC703	8-759-242-64	s	IC TC4W53F		
IC704	8-759-239-58	s	IC TC74HC221AF		
IC705	8-759-925-90	s	IC SN74HC74ANS		
IC706	8-759-926-24	s	IC SN74HC164ANS		
IC707	8-759-242-64	s	IC TC4W53F		
IC901	8-759-182-84	s	IC PQ05SZ5U		
IC902	8-759-822-95	s	IC L79M05T-FA		
IC903	8-759-182-84	s	IC PQ05SZ5U		
IC904	8-759-172-41	s	IC L78M09T-TL		
L101-105	1-410-482-31	s	INDUCTOR 100uH		
L107	1-410-482-31	s	INDUCTOR 100uH		
L201	1-408-413-00	s	INDUCTOR 22uH		
*L202	1-408-413-00	s	INDUCTOR 22uH		*24
	1-410-473-11	s	INDUCTOR 18uH		*25
L203	1-408-418-00	s	INDUCTOR 56uH		
L204	1-408-413-00	s	INDUCTOR 22uH		
L205	1-410-462-11	s	INDUCTOR 2.2uH		
L206	1-408-400-00	s	INDUCTOR 1.8uH		
L207	1-410-482-31	s	INDUCTOR 100uH		
L208	1-410-482-31	s	INDUCTOR 100uH		
L301	1-410-482-31	s	INDUCTOR 100uH		
L302	1-410-464-11	s	INDUCTOR 3.3uH		
L303	1-410-476-11	s	INDUCTOR 33uH		
L304	1-410-476-11	s	INDUCTOR 33uH		
L305	1-408-406-00	s	INDUCTOR 5.6uH		
L306-314	1-410-482-31	s	INDUCTOR 100uH		
L315	1-410-470-11	s	INDUCTOR 10uH		
L316	1-408-411-00	s	INDUCTOR 15uH		
L317	1-410-476-11	s	INDUCTOR 33uH		
L501	1-410-482-31	s	INDUCTOR 100uH		
L502	1-410-482-31	s	INDUCTOR 100uH		
L503	1-408-419-00	s	INDUCTOR 68uH		
L505	1-410-468-11	s	INDUCTOR 6.8uH		
L506	1-410-482-31	s	INDUCTOR 100uH		
L507	1-410-478-11	s	INDUCTOR 47uH		
L603	1-408-420-00	s	INDUCTOR 82uH		
L605	1-410-464-11	s	INDUCTOR 3.3uH		
L606	1-410-482-31	s	INDUCTOR 100uH		
L607	1-408-425-00	s	INDUCTOR 220uH		
L608	1-410-482-31	s	INDUCTOR 100uH		
L901-905	1-412-533-21	s	INDUCTOR 47uH		
LV301	1-406-746-11	s	INDUCTOR, VAR 22uH		
Q101	8-729-117-32	s	TRANSISTOR 2SC4177		
Q102	8-729-117-32	s	TRANSISTOR 2SC4177		
Q103	8-729-140-63	s	TRANSISTOR 2SA1611-M5M6		
Q104	8-729-904-41	s	TRANSISTOR FMY3		
Q105	8-729-117-32	s	TRANSISTOR 2SC4177		
Q106	8-729-140-63	s	TRANSISTOR 2SA1611-M5M6		
Q107	8-729-140-63	s	TRANSISTOR 2SA1611-M5M6		
Q108	8-729-117-32	s	TRANSISTOR 2SC4177		
Q109	8-729-117-32	s	TRANSISTOR 2SC4177		
Q110	8-729-117-32	s	TRANSISTOR 2SC4177		
Q111	8-729-117-32	s	TRANSISTOR 2SC4177		
Q112	8-729-140-63	s	TRANSISTOR 2SA1611-M5M6		
Q113	8-729-140-63	s	TRANSISTOR 2SA1611-M5M6		

Note: In this list * marked parts are design changed.
Refer to pages 18-29 to 18-31 for applicable serial numbers.

(VRA-5AP BOARD(for UVW-1400P, PAL))

Ref. No. or Q'ty	Part No.	SP	Description
Q114	8-729-117-32	s	TRANSISTOR 2SC4177
Q115	8-729-117-32	s	TRANSISTOR 2SC4177
Q116	8-729-140-63	s	TRANSISTOR 2SA1611-M5M6
Q117-122	8-729-117-32	s	TRANSISTOR 2SC4177
Q123	8-729-422-44	s	TRANSISTOR 2SK663
Q124	8-729-422-44	s	TRANSISTOR 2SK663
Q125	8-729-140-63	s	TRANSISTOR 2SA1611-M5M6
Q126	8-729-117-32	s	TRANSISTOR 2SC4177
Q127	8-729-117-32	s	TRANSISTOR 2SC4177
Q128	8-729-117-32	s	TRANSISTOR 2SC4177
Q129	8-729-117-32	s	TRANSISTOR 2SC4177
Q130	8-729-140-63	s	TRANSISTOR 2SA1611-M5M6
Q131	8-729-117-32	s	TRANSISTOR 2SC4177
Q132	8-729-117-32	s	TRANSISTOR 2SC4177
Q133	8-729-117-32	s	TRANSISTOR 2SC4177
Q201	8-729-117-32	s	TRANSISTOR 2SC4177
Q202	8-729-905-12	s	TRANSISTOR DTA144EU
Q203	8-729-905-18	s	TRANSISTOR DTC144EU
Q204	8-729-140-63	s	TRANSISTOR 2SA1611-M5M6
Q207	8-729-117-32	s	TRANSISTOR 2SC4177
Q209	8-729-140-63	s	TRANSISTOR 2SA1611-M5M6
Q210	8-729-117-32	s	TRANSISTOR 2SC4177
Q211	8-729-117-32	s	TRANSISTOR 2SC4177
Q212	8-729-140-63	s	TRANSISTOR 2SA1611-M5M6
Q213	8-729-117-32	s	TRANSISTOR 2SC4177
Q301	8-729-117-32	s	TRANSISTOR 2SC4177
Q303	8-729-117-32	s	TRANSISTOR 2SC4177
Q305	8-729-117-32	s	TRANSISTOR 2SC4177
Q306	8-729-140-63	s	TRANSISTOR 2SA1611-M5M6
Q307	8-729-140-63	s	TRANSISTOR 2SA1611-M5M6
Q308	8-729-905-18	s	TRANSISTOR DTC144EU
Q309	8-729-905-18	s	TRANSISTOR DTC144EU
Q310	8-729-117-32	s	TRANSISTOR 2SC4177
Q311	8-729-117-32	s	TRANSISTOR 2SC4177
Q312	8-729-140-63	s	TRANSISTOR 2SA1611-M5M6
Q313	8-729-140-63	s	TRANSISTOR 2SA1611-M5M6
Q314	8-729-140-63	s	TRANSISTOR 2SA1611-M5M6
Q315	8-729-140-63	s	TRANSISTOR 2SA1611-M5M6
Q316	8-729-905-18	s	TRANSISTOR DTC144EU
Q317	8-729-140-63	s	TRANSISTOR 2SA1611-M5M6
Q318	8-729-117-32	s	TRANSISTOR 2SC4177
Q319	8-729-140-63	s	TRANSISTOR 2SA1611-M5M6
Q320	8-729-140-63	s	TRANSISTOR 2SA1611-M5M6
Q321	8-729-117-32	s	TRANSISTOR 2SC4177
Q322	8-729-143-07	s	TRANSISTOR 2SA1610-YY33
Q323	8-729-143-07	s	TRANSISTOR 2SA1610-YY33
*Q324	8-729-201-27	s	TRANSISTOR 2SC2715-Y
	8-729-120-28	s	TRANSISTOR 2SC1623-L5L6
Q325	8-729-140-47	s	TRANSISTOR 2SC3735-B34
Q508-512	8-729-117-32	s	TRANSISTOR 2SC4177
Q513	8-729-117-72	s	TRANSISTOR 2SC4178
Q514	8-729-117-72	s	TRANSISTOR 2SC4178
Q515	8-729-117-32	s	TRANSISTOR 2SC4177
Q516	8-729-117-72	s	TRANSISTOR 2SC4178
Q517	8-729-117-72	s	TRANSISTOR 2SC4178
Q518	8-729-140-63	s	TRANSISTOR 2SA1611-M5M6
Q519	8-729-117-72	s	TRANSISTOR 2SC4178
Q520	8-729-117-72	s	TRANSISTOR 2SC4178

(VRA-5AP BOARD(for UVW-1400P, PAL))

Ref. No. or Q'ty	Part No.	SP	Description
Q601	8-729-117-32	s	TRANSISTOR 2SC4177
Q602	8-729-117-32	s	TRANSISTOR 2SC4177
Q603	8-729-117-32	s	TRANSISTOR 2SC4177
Q604-610	8-729-117-72	s	TRANSISTOR 2SC4178
Q701	8-729-117-32	s	TRANSISTOR 2SC4177
Q702	8-729-117-32	s	TRANSISTOR 2SC4177
Q703	8-729-117-32	s	TRANSISTOR 2SC4177
Q704	8-729-907-26	s	TRANSISTOR IMX1
Q705	8-729-117-32	s	TRANSISTOR 2SC4177
Q706	8-729-117-32	s	TRANSISTOR 2SC4177
Q707	8-729-117-32	s	TRANSISTOR 2SC4177
Q708	8-729-117-32	s	TRANSISTOR 2SC4177
Q709	8-729-907-26	s	TRANSISTOR IMX1
Q710	8-729-117-32	s	TRANSISTOR 2SC4177
Q711	8-729-117-32	s	TRANSISTOR 2SC4177
Q712	8-729-117-32	s	TRANSISTOR 2SC4177
Q713	8-729-902-96	s	TRANSISTOR FMS1
Q714	8-729-903-10	s	TRANSISTOR FMW1
Q715	8-729-117-32	s	TRANSISTOR 2SC4177
Q716	8-729-117-32	s	TRANSISTOR 2SC4177
Q717	8-729-117-32	s	TRANSISTOR 2SC4177
R100	1-216-097-91	s	METAL, CHIP 100k 5% 1/10W
R101	1-216-651-11	s	METAL, CHIP 1k 0.5% 1/10W
R102	1-216-651-11	s	METAL, CHIP 1k 0.5% 1/10W
R103	1-216-651-11	s	METAL, CHIP 1k 0.5% 1/10W
R104	1-216-651-11	s	METAL, CHIP 1k 0.5% 1/10W
R105	1-216-049-91	s	METAL, CHIP 1k 5% 1/10W
R106	1-216-013-00	s	METAL, CHIP 33 5% 1/10W
R107	1-216-097-91	s	METAL, CHIP 100k 5% 1/10W
R108	1-216-097-91	s	METAL, CHIP 100k 5% 1/10W
R109	1-216-025-91	s	METAL, CHIP 100 5% 1/10W
R110	1-216-651-11	s	METAL, CHIP 1k 0.5% 1/10W
R111	1-216-049-91	s	METAL, CHIP 1k 5% 1/10W
R112	1-216-049-91	s	METAL, CHIP 1k 5% 1/10W
R113	1-216-651-11	s	METAL, CHIP 1k 0.5% 1/10W
R114	1-216-651-11	s	METAL, CHIP 1k 0.5% 1/10W
R115	1-216-049-91	s	METAL, CHIP 1k 5% 1/10W
R116	1-216-041-00	s	METAL, CHIP 470 5% 1/10W
R117	1-216-639-11	s	METAL, CHIP 330 0.5% 1/10W
R118	1-216-639-11	s	METAL, CHIP 330 0.5% 1/10W
R119	1-216-041-00	s	METAL, CHIP 470 5% 1/10W
R120	1-216-641-11	s	METAL, CHIP 390 0.5% 1/10W
R121	1-216-057-00	s	METAL, CHIP 2.2k 5% 1/10W
R122	1-216-037-00	s	METAL, CHIP 330 5% 1/10W
R123	1-216-065-00	s	METAL, CHIP 4.7k 5% 1/10W
R124	1-216-049-91	s	METAL, CHIP 1k 5% 1/10W
*5			
*6 R125	1-216-065-00	s	METAL, CHIP 4.7k 5% 1/10W
R126	1-216-041-00	s	METAL, CHIP 470 5% 1/10W
R127	1-216-025-91	s	METAL, CHIP 100 5% 1/10W
R128	1-216-065-00	s	METAL, CHIP 4.7k 5% 1/10W
R129	1-216-049-91	s	METAL, CHIP 1k 5% 1/10W
R130	1-216-073-00	s	METAL, CHIP 10k 5% 1/10W
R131	1-216-049-91	s	METAL, CHIP 1k 5% 1/10W
R132	1-216-049-91	s	METAL, CHIP 1k 5% 1/10W
R133	1-216-037-00	s	METAL, CHIP 330 5% 1/10W
R134	1-216-065-00	s	METAL, CHIP 4.7k 5% 1/10W
R135	1-216-657-11	s	METAL, CHIP 1.8k 0.5% 1/10W
R136	1-216-025-91	s	METAL, CHIP 100 5% 1/10W

Note: In this list * marked parts are design changed.
Refer to pages 18-29 to 18-31 for applicable serial numbers.

(VRA-5AP BOARD(for UVW-1400P, PAL))

Ref. No. or Q'ty	Part No.	SP	Description	
R137	1-216-057-00	s	METAL, CHIP 2.2k 5% 1/10W	
R138	1-216-651-11	s	METAL, CHIP 1k 0.5% 1/10W	
R139	1-208-814-11	s	METAL, CHIP 22k 0.5% 1/10W	
R140	1-216-651-11	s	METAL, CHIP 1k 0.5% 1/10W	
R141	1-216-037-00	s	METAL, CHIP 330 5% 1/10W	
R142	1-216-049-91	s	METAL, CHIP 1k 5% 1/10W	
R143	1-216-057-00	s	METAL, CHIP 2.2k 5% 1/10W	
R144	1-216-037-00	s	METAL, CHIP 330 5% 1/10W	
R145	1-216-065-00	s	METAL, CHIP 4.7k 5% 1/10W	
R146	1-216-049-91	s	METAL, CHIP 1k 5% 1/10W	
R147	1-216-065-00	s	METAL, CHIP 4.7k 5% 1/10W	
R148	1-216-121-91	s	METAL, CHIP 1M 5% 1/10W	
R149	1-216-057-00	s	METAL, CHIP 2.2k 5% 1/10W	
R150	1-216-049-91	s	METAL, CHIP 1k 5% 1/10W	
R151	1-216-081-00	s	METAL, CHIP 22k 5% 1/10W	
R152	1-216-121-91	s	METAL, CHIP 1M 5% 1/10W	
R153	1-216-057-00	s	METAL, CHIP 2.2k 5% 1/10W	
R154	1-216-049-91	s	METAL, CHIP 1k 5% 1/10W	
R155	1-216-073-00	s	METAL, CHIP 10k 5% 1/10W	
R156	1-216-073-00	s	METAL, CHIP 10k 5% 1/10W	
R157	1-216-081-00	s	METAL, CHIP 22k 5% 1/10W	
R158	1-216-073-00	s	METAL, CHIP 10k 5% 1/10W	
R159	1-216-049-91	s	METAL, CHIP 1k 5% 1/10W	
R160	1-216-049-91	s	METAL, CHIP 1k 5% 1/10W	
R161	1-216-065-00	s	METAL, CHIP 4.7k 5% 1/10W	
R162	1-216-037-00	s	METAL, CHIP 330 5% 1/10W	
R163	1-216-025-91	s	METAL, CHIP 100 5% 1/10W	
R164	1-216-057-00	s	METAL, CHIP 2.2k 5% 1/10W	
R165	1-216-651-11	s	METAL, CHIP 1k 0.5% 1/10W	
R166	1-208-814-11	s	METAL, CHIP 22k 0.5% 1/10W	
R167	1-216-651-11	s	METAL, CHIP 1k 0.5% 1/10W	
R168	1-216-037-00	s	METAL, CHIP 330 5% 1/10W	
R169	1-216-049-91	s	METAL, CHIP 1k 5% 1/10W	
R170	1-216-057-00	s	METAL, CHIP 2.2k 5% 1/10W	
R171	1-216-037-00	s	METAL, CHIP 330 5% 1/10W	
R172	1-216-065-00	s	METAL, CHIP 4.7k 5% 1/10W	
R173	1-216-049-91	s	METAL, CHIP 1k 5% 1/10W	
R174	1-216-065-00	s	METAL, CHIP 4.7k 5% 1/10W	
R175	1-216-025-91	s	METAL, CHIP 100 5% 1/10W	
R176	1-216-049-91	s	METAL, CHIP 1k 5% 1/10W	
R177	1-216-025-91	s	METAL, CHIP 100 5% 1/10W	
R178	1-216-627-11	s	METAL, CHIP 100 0.5% 1/10W	
R180	1-216-651-11	s	METAL, CHIP 1k 0.5% 1/10W	
R181	1-216-025-91	s	METAL, CHIP 100 5% 1/10W	
R182	1-216-049-91	s	METAL, CHIP 1k 5% 1/10W	
R184	1-216-651-11	s	METAL, CHIP 1k 0.5% 1/10W	
R185	1-216-025-91	s	METAL, CHIP 100 5% 1/10W	
R186	1-216-049-91	s	METAL, CHIP 1k 5% 1/10W	
*R188	1-216-617-11	s	METAL, CHIP 39 0.50% 1/10W	*1
	1-216-618-11	s	METAL, CHIP 43 0.50% 1/10W	*2
R189	1-216-025-91	s	METAL, CHIP 100 5% 1/10W	
R190	1-216-646-11	s	METAL, CHIP 620 0.5% 1/10W	
R193	1-216-097-91	s	METAL, CHIP 100k 5% 1/10W	
R200	1-216-651-11	s	METAL, CHIP 1k 0.5% 1/10W	
R201	1-216-651-11	s	METAL, CHIP 1k 0.5% 1/10W	
R202	1-216-073-00	s	METAL, CHIP 10k 5% 1/10W	
R203	1-216-073-00	s	METAL, CHIP 10k 5% 1/10W	
R204	1-216-655-11	s	METAL, CHIP 1.5k 0.5% 1/10W	

(VRA-5AP BOARD(for UVW-1400P, PAL))

Ref. No. or Q'ty	Part No.	SP	Description	
*R205	1-216-643-11	s	METAL, CHIP 470 0.5% 1/10W	*24
	1-216-631-11	s	METAL, CHIP 150 0.5% 1/10W	*25
R206	1-216-655-11	s	METAL, CHIP 1.5k 0.5% 1/10W	
*R207	1-216-643-11	s	METAL, CHIP 470 0.5% 1/10W	*24
	1-216-631-11	s	METAL, CHIP 150 0.5% 1/10W	*25
R208	1-216-619-11	s	METAL, CHIP 47 0.5% 1/10W	
R209	1-216-619-11	s	METAL, CHIP 47 0.5% 1/10W	
R210	1-216-009-00	s	METAL, CHIP 22 5% 1/10W	
R211	1-216-013-00	s	METAL, CHIP 33 5% 1/10W	
R212	1-216-009-00	s	METAL, CHIP 22 5% 1/10W	
R216	1-216-013-00	s	METAL, CHIP 33 5% 1/10W	
R217	1-216-089-91	s	METAL, CHIP 47k 5% 1/10W	
R220	1-218-764-11	s	METAL, CHIP 330k 0.5% 1/10W	
R223	1-216-663-11	s	METAL, CHIP 3.3k 0.5% 1/10W	
R225	1-216-663-11	s	METAL, CHIP 3.3k 0.5% 1/10W	
R226	1-216-081-00	s	METAL, CHIP 22k 5% 1/10W	
R227	1-216-065-00	s	METAL, CHIP 4.7k 5% 1/10W	
R228	1-216-687-11	s	METAL, CHIP 33k 0.5% 1/10W	
R229	1-216-667-11	s	METAL, CHIP 4.7k 0.5% 1/10W	
R230	1-216-635-11	s	METAL, CHIP 220 0.5% 1/10W	
R231	1-216-635-11	s	METAL, CHIP 220 0.5% 1/10W	
R232	1-216-635-11	s	METAL, CHIP 220 0.5% 1/10W	
R233	1-216-635-11	s	METAL, CHIP 220 0.5% 1/10W	
R234	1-216-049-91	s	METAL, CHIP 1k 5% 1/10W	
*R235	1-216-065-00	s	METAL, CHIP 4.7k 5% 1/10W	*32
R236	1-216-049-91	s	METAL, CHIP 1k 5% 1/10W	
R238	1-216-073-00	s	METAL, CHIP 10k 5% 1/10W	
R239	1-216-073-00	s	METAL, CHIP 10k 5% 1/10W	
R240	1-216-295-91	s	RES, CHIP 0	
R241	1-216-089-91	s	METAL, CHIP 47k 5% 1/10W	
R242	1-216-696-11	s	METAL, CHIP 75k 0.5% 1/10W	
R243	1-216-041-00	s	METAL, CHIP 470 5% 1/10W	
R244	1-216-041-00	s	METAL, CHIP 470 5% 1/10W	
R245	1-216-065-00	s	METAL, CHIP 4.7k 5% 1/10W	
R246	1-216-639-11	s	METAL, CHIP 330 0.5% 1/10W	
R247	1-216-639-11	s	METAL, CHIP 330 0.5% 1/10W	
R248	1-208-812-11	s	METAL, CHIP 18k 0.5% 1/10W	
R249	1-216-081-00	s	METAL, CHIP 22k 5% 1/10W	
R250	1-216-065-00	s	METAL, CHIP 4.7k 5% 1/10W	
R251	1-216-065-00	s	METAL, CHIP 4.7k 5% 1/10W	
R252	1-216-049-91	s	METAL, CHIP 1k 5% 1/10W	
R253	1-216-097-91	s	METAL, CHIP 100k 5% 1/10W	
R254	1-216-639-11	s	METAL, CHIP 330 0.5% 1/10W	
R255	1-216-639-11	s	METAL, CHIP 330 0.5% 1/10W	
R256	1-216-049-91	s	METAL, CHIP 1k 5% 1/10W	
R257	1-216-049-91	s	METAL, CHIP 1k 5% 1/10W	
R258	1-216-073-00	s	METAL, CHIP 10k 5% 1/10W	
R259	1-216-073-00	s	METAL, CHIP 10k 5% 1/10W	
R260	1-216-073-00	s	METAL, CHIP 10k 5% 1/10W	
R261	1-216-073-00	s	METAL, CHIP 10k 5% 1/10W	
R263-268	1-216-073-00	s	METAL, CHIP 10k 5% 1/10W	
R270-279	1-216-073-00	s	METAL, CHIP 10k 5% 1/10W	
R280	1-216-695-11	s	METAL, CHIP 68k 0.5% 1/10W	
R301	1-216-073-00	s	METAL, CHIP 10k 5% 1/10W	
R302	1-216-051-00	s	METAL, CHIP 1.2k 5% 1/10W	
R303	1-216-049-91	s	METAL, CHIP 1k 5% 1/10W	
R304	1-216-025-91	s	METAL, CHIP 100 5% 1/10W	
R305	1-208-806-11	s	METAL, CHIP 10k 0.5% 1/10W	
R306	1-208-806-11	s	METAL, CHIP 10k 0.5% 1/10W	

Note: In this list * marked parts are design changed.
Refer to pages 18-29 to 18-31 for applicable serial numbers.

(VRA-5AP BOARD(for UVW-1400P, PAL))

Ref. No. or Q'ty	Part No.	SP	Description	
R307	1-216-049-91	s	METAL, CHIP 1k 5% 1/10W	
R308	1-216-049-91	s	METAL, CHIP 1k 5% 1/10W	
R309	1-216-049-91	s	METAL, CHIP 1k 5% 1/10W	
R310	1-216-049-91	s	METAL, CHIP 1k 5% 1/10W	
R311	1-216-057-00	s	METAL, CHIP 2.2k 5% 1/10W	
R312	1-216-057-00	s	METAL, CHIP 2.2k 5% 1/10W	
R313	1-216-025-91	s	METAL, CHIP 100 5% 1/10W	
R314	1-216-057-00	s	METAL, CHIP 2.2k 5% 1/10W	
R315	1-216-073-00	s	METAL, CHIP 10k 5% 1/10W	
R316	1-216-073-00	s	METAL, CHIP 10k 5% 1/10W	
R317	1-216-049-91	s	METAL, CHIP 1k 5% 1/10W	
R318	1-216-049-91	s	METAL, CHIP 1k 5% 1/10W	
R319	1-216-049-91	s	METAL, CHIP 1k 5% 1/10W	
R320	1-216-049-91	s	METAL, CHIP 1k 5% 1/10W	
R321	1-216-097-91	s	METAL, CHIP 100k 5% 1/10W	
R322	1-216-049-91	s	METAL, CHIP 1k 5% 1/10W	
R323	1-216-646-11	s	METAL, CHIP 620 0.5% 1/10W	
R324	1-216-057-00	s	METAL, CHIP 2.2k 5% 1/10W	
R325	1-216-057-00	s	METAL, CHIP 2.2k 5% 1/10W	
R326	1-216-041-00	s	METAL, CHIP 470 5% 1/10W	
R327	1-208-774-11	s	METAL, CHIP 470 5% 1/10W	
R328	1-216-667-11	s	METAL, CHIP 4.7k 0.5% 1/10W	
R329	1-216-065-00	s	METAL, CHIP 4.7k 5% 1/10W	
R330	1-216-049-91	s	METAL, CHIP 1k 5% 1/10W	
R331	1-208-774-11	s	METAL, CHIP 470 5% 1/10W	
R332	1-216-065-00	s	METAL, CHIP 4.7k 5% 1/10W	
R333	1-216-117-00	s	METAL, CHIP 680k 5% 1/10W	
R334	1-216-667-11	s	METAL, CHIP 4.7k 0.5% 1/10W	
R335	1-216-073-00	s	METAL, CHIP 10k 5% 1/10W	
R336	1-218-764-11	s	METAL, CHIP 330k 0.5% 1/10W	
R337	1-218-764-11	s	METAL, CHIP 330k 0.5% 1/10W	
R338	1-216-089-91	s	METAL, CHIP 47k 5% 1/10W	
R339	1-216-085-00	s	METAL, CHIP 33k 5% 1/10W	
R340	1-216-073-00	s	METAL, CHIP 10k 5% 1/10W	
R341	1-216-667-11	s	METAL, CHIP 4.7k 0.5% 1/10W	
R342	1-216-695-11	s	METAL, CHIP 68k 0.5% 1/10W	
R343	1-216-057-00	s	METAL, CHIP 2.2k 5% 1/10W	
R344	1-216-085-00	s	METAL, CHIP 33k 5% 1/10W	
R345	1-216-085-00	s	METAL, CHIP 33k 5% 1/10W	
R346	1-216-073-00	s	METAL, CHIP 10k 5% 1/10W	
R347	1-216-049-91	s	METAL, CHIP 1k 5% 1/10W	
R348	1-216-065-00	s	METAL, CHIP 4.7k 5% 1/10W	
R349	1-216-049-91	s	METAL, CHIP 1k 5% 1/10W	
R350	1-216-025-91	s	METAL, CHIP 100 5% 1/10W	
R351	1-216-085-00	s	METAL, CHIP 33k 5% 1/10W	
R352	1-208-801-11	s	METAL, CHIP 6.2k 0.5% 1/10W	
R353	1-216-634-11	s	METAL, CHIP 200 0.5% 1/10W	
R354	1-216-663-11	s	METAL, CHIP 3.3k 0.5% 1/10W	
R355	1-216-073-00	s	METAL, CHIP 10k 5% 1/10W	
R356	1-216-065-00	s	METAL, CHIP 4.7k 5% 1/10W	
R357	1-216-121-91	s	METAL, CHIP 1M 5% 1/10W	
R358	1-216-117-00	s	METAL, CHIP 680k 5% 1/10W	
R359	1-216-635-11	s	METAL, CHIP 220 0.5% 1/10W	
R360	1-216-667-11	s	METAL, CHIP 4.7k 0.5% 1/10W	
R361	1-216-049-91	s	METAL, CHIP 1k 5% 1/10W	
R362	1-216-651-11	s	METAL, CHIP 1k 0.5% 1/10W	
R363	1-208-806-11	s	METAL, CHIP 10k 0.5% 1/10W	
R364	1-208-806-11	s	METAL, CHIP 10k 0.5% 1/10W	
R365	1-216-651-11	s	METAL, CHIP 1k 0.5% 1/10W	

(VRA-5AP BOARD(for UVW-1400P, PAL))

Ref. No. or Q'ty	Part No.	SP	Description	
R367	1-216-025-91	s	METAL, CHIP 100 5% 1/10W	
R368	1-216-651-11	s	METAL, CHIP 1k 0.5% 1/10W	
R369	1-216-663-11	s	METAL, CHIP 3.3k 0.5% 1/10W	
R370	1-216-049-91	s	METAL, CHIP 1k 5% 1/10W	
R371	1-216-635-11	s	METAL, CHIP 220 0.5% 1/10W	
R372	1-216-639-11	s	METAL, CHIP 330 0.5% 1/10W	
R373	1-216-295-91	s	RES, CHIP 0	
R374	1-216-295-91	s	RES, CHIP 0	
*R375	1-216-681-11	s	METAL, CHIP 18k 0.5% 1/10W	*31
	1-208-814-11	s	METAL, CHIP 22k 0.5% 1/10W	*32
R376	1-216-073-00	s	METAL, CHIP 10k 5% 1/10W	
R377	1-208-784-11	s	METAL, CHIP 1.2k 0.5% 1/10W	
R378	1-208-810-11	s	METAL, CHIP 15k 0.5% 1/10W	
R379	1-216-025-91	s	METAL, CHIP 100 5% 1/10W	
R380	1-216-671-11	s	METAL, CHIP 6.8k 0.5% 1/10W	
R381	1-216-073-00	s	METAL, CHIP 10k 5% 1/10W	
R382	1-216-673-11	s	METAL, CHIP 8.2k 0.5% 1/10W	
R383	1-216-673-11	s	METAL, CHIP 8.2k 0.5% 1/10W	
R384	1-216-673-11	s	METAL, CHIP 8.2k 0.5% 1/10W	
R385	1-216-025-91	s	METAL, CHIP 100 5% 1/10W	
R386	1-216-677-11	s	METAL, CHIP 12k 0.5% 1/10W	
R387	1-216-657-11	s	METAL, CHIP 1.8k 0.5% 1/10W	
R388	1-216-651-11	s	METAL, CHIP 1k 0.5% 1/10W	
R389	1-216-651-11	s	METAL, CHIP 1k 0.5% 1/10W	
R390	1-208-784-11	s	METAL, CHIP 1.2k 0.5% 1/10W	
R391	1-208-784-11	s	METAL, CHIP 1.2k 0.5% 1/10W	
R392	1-216-065-00	s	METAL, CHIP 4.7k 5% 1/10W	
R393	1-216-663-11	s	METAL, CHIP 3.3k 0.5% 1/10W	
R394	1-216-049-91	s	METAL, CHIP 1k 5% 1/10W	
R395	1-216-049-91	s	METAL, CHIP 1k 5% 1/10W	
R396	1-216-295-91	s	RES, CHIP 0	
R397	1-216-295-91	s	RES, CHIP 0	
R399	1-216-651-11	s	METAL, CHIP 1k 0.5% 1/10W	
R400	1-208-789-11	s	METAL, CHIP 2k 0.5% 1/10W	
R401	1-208-784-11	s	METAL, CHIP 1.2k 0.5% 1/10W	
R402	1-216-648-11	s	METAL, CHIP 750 0.5% 1/10W	
R403	1-216-037-00	s	METAL, CHIP 330 5% 1/10W	
R404	1-216-671-11	s	METAL, CHIP 6.8k 0.5% 1/10W	
R405	1-208-817-11	s	METAL, CHIP 30k 0.5% 1/10W	
R406	1-216-041-00	s	METAL, CHIP 470 5% 1/10W	
R407	1-216-133-00	s	METAL, CHIP 3.3M 5% 1/10W	
*R413	1-216-295-91	s	RES, CHIP 0	*32
R501	1-216-085-00	s	METAL, CHIP 33k 5% 1/10W	
R502	1-216-073-00	s	METAL, CHIP 10k 5% 1/10W	
R503	1-216-667-11	s	METAL, CHIP 4.7k 0.5% 1/10W	
R504	1-216-663-11	s	METAL, CHIP 3.3k 0.5% 1/10W	
R505	1-216-065-00	s	METAL, CHIP 4.7k 5% 1/10W	
R506	1-216-651-11	s	METAL, CHIP 1k 0.5% 1/10W	
R507	1-216-651-11	s	METAL, CHIP 1k 0.5% 1/10W	
R508	1-216-065-00	s	METAL, CHIP 4.7k 5% 1/10W	
R509	1-216-639-11	s	METAL, CHIP 330 0.5% 1/10W	
R510	1-216-661-11	s	METAL, CHIP 2.7k 0.5% 1/10W	
R511	1-216-295-91	s	RES, CHIP 0	
R512	1-218-184-11	s	METAL, CHIP 997 0.1% 1/16W	
R513	1-208-806-11	s	METAL, CHIP 10k 0.5% 1/10W	
R514	1-216-635-11	s	METAL, CHIP 220 0.5% 1/10W	
R515	1-216-699-11	s	METAL, CHIP 100k 0.5% 1/10W	
R516	1-218-922-11	s	METAL, CHIP 3.26k 0.10% 1/16W	
R517	1-216-607-11	s	METAL, CHIP 15 0.50% 1/10W	

Note: In this list * marked parts are design changed.
Refer to pages 18-29 to 18-31 for applicable serial numbers.

(VRA-5AP BOARD(for UVW-1400P, PAL))

Ref. No. or Q'ty	Part No.	SP	Description	
R518	1-216-661-11	s	METAL, CHIP 2.7k 0.5% 1/10W	
R519	1-216-057-00	s	METAL, CHIP 2.2k 5% 1/10W	
R520	1-216-025-91	s	METAL, CHIP 100 5% 1/10W	
R521	1-216-667-11	s	METAL, CHIP 4.7k 0.5% 1/10W	
R522	1-216-655-11	s	METAL, CHIP 1.5k 0.5% 1/10W	
R523	1-216-687-11	s	METAL, CHIP 33k 0.5% 1/10W	
R524	1-216-295-91	s	RES, CHIP 0	
R525	1-216-639-11	s	METAL, CHIP 330 0.5% 1/10W	
R526	1-208-812-11	s	METAL, CHIP 18k 0.5% 1/10W	
R527	1-216-677-11	s	METAL, CHIP 12k 0.5% 1/10W	
R528	1-216-648-11	s	METAL, CHIP 750 0.5% 1/10W	
R529	1-216-295-91	s	RES, CHIP 0	
R530	1-216-687-11	s	METAL, CHIP 33k 0.5% 1/10W	
R531	1-208-774-11	s	METAL, CHIP 470 5% 1/10W	
R532	1-216-667-11	s	METAL, CHIP 4.7k 0.5% 1/10W	
R533	1-208-774-11	s	METAL, CHIP 470 5% 1/10W	
R534	1-216-025-91	s	METAL, CHIP 100 5% 1/10W	
R535	1-216-025-91	s	METAL, CHIP 100 5% 1/10W	
R536	1-216-057-00	s	METAL, CHIP 2.2k 5% 1/10W	
R537	1-216-661-11	s	METAL, CHIP 2.7k 0.5% 1/10W	
R538	1-216-657-11	s	METAL, CHIP 1.8k 0.5% 1/10W	
R539	1-216-025-91	s	METAL, CHIP 100 5% 1/10W	
R540	1-216-663-11	s	METAL, CHIP 3.3k 0.5% 1/10W	
R541	1-216-659-11	s	METAL, CHIP 2.2k 0.5% 1/10W	
R542	1-216-073-00	s	METAL, CHIP 10k 5% 1/10W	
R543	1-216-073-00	s	METAL, CHIP 10k 5% 1/10W	
R544	1-216-025-91	s	METAL, CHIP 100 5% 1/10W	
R545	1-216-037-00	s	METAL, CHIP 330 5% 1/10W	
R546	1-216-037-00	s	METAL, CHIP 330 5% 1/10W	
R547	1-208-810-11	s	METAL, CHIP 15k 0.5% 1/10W	
R548	1-208-806-11	s	METAL, CHIP 10k 0.5% 1/10W	
*R549	1-216-658-11	s	METAL, CHIP 2k 0.5% 1/10W	*31
	1-216-660-11	s	METAL, CHIP 2.4k 0.5% 1/10W	*32
R550	1-216-013-00	s	METAL, CHIP 33 5% 1/10W	
R551	1-216-013-00	s	METAL, CHIP 33 5% 1/10W	
R552	1-216-065-00	s	METAL, CHIP 4.7k 5% 1/10W	
R553	1-216-655-11	s	METAL, CHIP 1.5k 0.5% 1/10W	
R554	1-208-814-11	s	METAL, CHIP 22k 0.5% 1/10W	
R555	1-216-663-11	s	METAL, CHIP 3.3k 0.5% 1/10W	
*R556	1-216-665-11	s	METAL, CHIP 3.9k 0.5% 1/10W	*3
	1-216-666-11	s	METAL, CHIP 4.3k 0.5% 1/10W	*4
R557	1-216-677-11	s	METAL, CHIP 12k 0.5% 1/10W	
R558	1-216-065-00	s	METAL, CHIP 4.7k 5% 1/10W	
R559	1-216-073-00	s	METAL, CHIP 10k 5% 1/10W	
R560	1-216-073-00	s	METAL, CHIP 10k 5% 1/10W	
R561	1-216-665-11	s	METAL, CHIP 3.9k 0.5% 1/10W	
R562	1-216-049-91	s	METAL, CHIP 1k 5% 1/10W	
R563	1-216-025-91	s	METAL, CHIP 100 5% 1/10W	
R564	1-208-806-11	s	METAL, CHIP 10k 0.5% 1/10W	
R565	1-208-806-11	s	METAL, CHIP 10k 0.5% 1/10W	
R601	1-216-085-00	s	METAL, CHIP 33k 5% 1/10W	
R602	1-216-073-00	s	METAL, CHIP 10k 5% 1/10W	
R603	1-216-667-11	s	METAL, CHIP 4.7k 0.5% 1/10W	
R604	1-216-051-00	s	METAL, CHIP 1.2k 5% 1/10W	
R605	1-216-663-11	s	METAL, CHIP 3.3k 0.5% 1/10W	
R606	1-216-065-00	s	METAL, CHIP 4.7k 5% 1/10W	
R607	1-216-651-11	s	METAL, CHIP 1k 0.5% 1/10W	
R608	1-216-651-11	s	METAL, CHIP 1k 0.5% 1/10W	
R609	1-216-065-00	s	METAL, CHIP 4.7k 5% 1/10W	

(VRA-5AP BOARD(for UVW-1400P, PAL))

Ref. No. or Q'ty	Part No.	SP	Description
R610	1-216-635-11	s	METAL, CHIP 220 0.5% 1/10W
R611	1-216-651-11	s	METAL, CHIP 1k 0.5% 1/10W
R612	1-216-622-11	s	METAL, CHIP 62 0.5% 1/10W
R613	1-218-184-11	s	METAL, CHIP 997 0.1% 1/16W
R614	1-208-806-11	s	METAL, CHIP 10k 0.5% 1/10W
R615	1-216-635-11	s	METAL, CHIP 220 0.5% 1/10W
R617	1-218-922-11	s	METAL, CHIP 3.26k 0.10% 1/16W
R618	1-216-295-91	s	RES, CHIP 0
R619	1-216-661-11	s	METAL, CHIP 2.7k 0.5% 1/10W
R620	1-216-025-91	s	METAL, CHIP 100 5% 1/10W
R621	1-216-057-00	s	METAL, CHIP 2.2k 5% 1/10W
R622	1-216-667-11	s	METAL, CHIP 4.7k 0.5% 1/10W
R623	1-216-655-11	s	METAL, CHIP 1.5k 0.5% 1/10W
R624	1-216-687-11	s	METAL, CHIP 33k 0.5% 1/10W
R625	1-216-295-91	s	RES, CHIP 0
R626	1-216-641-11	s	METAL, CHIP 390 0.5% 1/10W
R627	1-208-812-11	s	METAL, CHIP 18k 0.5% 1/10W
R628	1-216-677-11	s	METAL, CHIP 12k 0.5% 1/10W
R629	1-216-651-11	s	METAL, CHIP 1k 0.5% 1/10W
R630	1-216-295-91	s	RES, CHIP 0
R631	1-216-687-11	s	METAL, CHIP 33k 0.5% 1/10W
R632	1-216-648-11	s	METAL, CHIP 750 0.5% 1/10W
R633	1-216-667-11	s	METAL, CHIP 4.7k 0.5% 1/10W
R634	1-216-041-00	s	METAL, CHIP 470 5% 1/10W
R635	1-216-025-91	s	METAL, CHIP 100 5% 1/10W
R636	1-216-073-00	s	METAL, CHIP 10k 5% 1/10W
R637	1-216-025-91	s	METAL, CHIP 100 5% 1/10W
R638	1-216-057-00	s	METAL, CHIP 2.2k 5% 1/10W
R639	1-208-775-11	s	METAL, CHIP 510 0.5% 1/10W
R640	1-216-646-11	s	METAL, CHIP 620 0.5% 1/10W
R641	1-208-775-11	s	METAL, CHIP 510 0.5% 1/10W
R642	1-216-651-11	s	METAL, CHIP 1k 0.5% 1/10W
R643	1-216-057-00	s	METAL, CHIP 2.2k 5% 1/10W
R644	1-216-041-00	s	METAL, CHIP 470 5% 1/10W
R645	1-216-049-91	s	METAL, CHIP 1k 5% 1/10W
R646	1-216-057-00	s	METAL, CHIP 2.2k 5% 1/10W
R647	1-216-049-91	s	METAL, CHIP 1k 5% 1/10W
R648	1-216-025-91	s	METAL, CHIP 100 5% 1/10W
R649	1-216-025-91	s	METAL, CHIP 100 5% 1/10W
R650	1-216-037-00	s	METAL, CHIP 330 5% 1/10W
R651	1-216-037-00	s	METAL, CHIP 330 5% 1/10W
R652	1-216-013-00	s	METAL, CHIP 33 5% 1/10W
R653	1-216-013-00	s	METAL, CHIP 33 5% 1/10W
R654	1-216-667-11	s	METAL, CHIP 4.7k 0.5% 1/10W
R655	1-216-663-11	s	METAL, CHIP 3.3k 0.5% 1/10W
R656	1-216-025-91	s	METAL, CHIP 100 5% 1/10W
R657	1-208-806-11	s	METAL, CHIP 10k 0.5% 1/10W
R658	1-208-806-11	s	METAL, CHIP 10k 0.5% 1/10W
R701	1-216-025-91	s	METAL, CHIP 100 5% 1/10W
R702	1-216-049-91	s	METAL, CHIP 1k 5% 1/10W
R703	1-208-625-11	s	METAL, CHIP 2.25k 0.1% 1/16W
R704	1-208-627-11	s	METAL, CHIP 4.41k 0.1% 1/16W
R705	1-208-630-11	s	METAL, CHIP 11.49 0.1% 1/16W
R706	1-216-049-91	s	METAL, CHIP 1k 5% 1/10W
R708	1-216-025-91	s	METAL, CHIP 100 5% 1/10W
R709	1-216-049-91	s	METAL, CHIP 1k 5% 1/10W
R710	1-216-657-11	s	METAL, CHIP 1.8k 0.5% 1/10W
R711	1-208-625-11	s	METAL, CHIP 2.25k 0.1% 1/16W
R712	1-208-630-11	s	METAL, CHIP 11.49 0.1% 1/16W

Note: In this list * marked parts are design changed.
Refer to pages 18-29 to 18-31 for applicable serial numbers.

(VRA-5AP BOARD(for UVW-1400P, PAL))

Ref. No. or Q'ty	Part No.	SP	Description
R713	1-216-057-00	s	METAL, CHIP 2.2k 5% 1/10W
R714	1-216-055-00	s	METAL, CHIP 1.8k 5% 1/10W
R715	1-218-477-11	s	METAL, CHIP 220 5% 1/4W
R716	1-216-645-11	s	METAL, CHIP 560 0.5% 1/10W
R717	1-208-774-11	s	METAL, CHIP 470 5% 1/10W
R718	1-208-774-11	s	METAL, CHIP 470 5% 1/10W
R719	1-216-041-00	s	METAL, CHIP 470 5% 1/10W
R720	1-216-049-91	s	METAL, CHIP 1k 5% 1/10W
R721	1-216-049-91	s	METAL, CHIP 1k 5% 1/10W
R722	1-216-025-91	s	METAL, CHIP 100 5% 1/10W
R723	1-216-049-91	s	METAL, CHIP 1k 5% 1/10W
R724	1-208-623-11	s	METAL, CHIP 1.43k 0.1% 1/16W
R725	1-208-625-11	s	METAL, CHIP 2.25k 0.1% 1/16W
R726	1-208-627-11	s	METAL, CHIP 4.41k 0.1% 1/16W
R727	1-216-057-00	s	METAL, CHIP 2.2k 5% 1/10W
R728	1-216-055-00	s	METAL, CHIP 1.8k 5% 1/10W
R729	1-218-477-11	s	METAL, CHIP 220 5% 1/4W
R730	1-216-645-11	s	METAL, CHIP 560 0.5% 1/10W
R731	1-208-774-11	s	METAL, CHIP 470 5% 1/10W
R732	1-208-774-11	s	METAL, CHIP 470 5% 1/10W
R733	1-216-041-00	s	METAL, CHIP 470 5% 1/10W
R734	1-216-049-91	s	METAL, CHIP 1k 5% 1/10W
R735	1-216-049-91	s	METAL, CHIP 1k 5% 1/10W
R736	1-216-625-11	s	METAL, CHIP 82 0.5% 1/10W
R737	1-216-625-11	s	METAL, CHIP 82 0.5% 1/10W
R738	1-216-622-11	s	METAL, CHIP 62 0.5% 1/10W
R739	1-216-625-11	s	METAL, CHIP 82 0.5% 1/10W
R740	1-216-025-91	s	METAL, CHIP 100 5% 1/10W
R741	1-216-025-91	s	METAL, CHIP 100 5% 1/10W
R742	1-216-041-00	s	METAL, CHIP 470 5% 1/10W
R743	1-216-057-00	s	METAL, CHIP 2.2k 5% 1/10W
R744	1-216-045-00	s	METAL, CHIP 680 5% 1/10W
R745	1-216-041-00	s	METAL, CHIP 470 5% 1/10W
R746	1-216-667-11	s	METAL, CHIP 4.7k 0.5% 1/10W
R747	1-216-627-11	s	METAL, CHIP 100 0.5% 1/10W
R748	1-216-057-00	s	METAL, CHIP 2.2k 5% 1/10W
R749	1-216-655-11	s	METAL, CHIP 1.5k 0.5% 1/10W
R750	1-216-045-00	s	METAL, CHIP 680 5% 1/10W
R751	1-216-651-11	s	METAL, CHIP 1k 0.5% 1/10W
R752	1-216-057-00	s	METAL, CHIP 2.2k 5% 1/10W
R753	1-216-057-00	s	METAL, CHIP 2.2k 5% 1/10W
R754	1-216-648-11	s	METAL, CHIP 750 0.5% 1/10W
R755	1-208-806-11	s	METAL, CHIP 10k 0.5% 1/10W
R756	1-216-671-11	s	METAL, CHIP 6.8k 0.5% 1/10W
RV101	1-241-760-11	s	RES, ADJ METAL 470
RV102	1-241-760-11	s	RES, ADJ METAL 470
RV103	1-241-762-11	s	RES, ADJ METAL 2.2k
RV104	1-241-760-11	s	RES, ADJ METAL 470
RV105	1-241-759-21	s	RES, ADJ METAL 220
RV201	1-241-784-11	s	RES, ADJ METAL 4.7k
RV202	1-241-785-11	s	RES, ADJ METAL 10k
RV203	1-241-785-11	s	RES, ADJ METAL 10k
RV301	1-241-762-11	s	RES, ADJ METAL 2.2k
RV302	1-241-785-11	s	RES, ADJ METAL 10k
RV303	1-241-784-11	s	RES, ADJ METAL 4.7k
RV304	1-241-784-11	s	RES, ADJ METAL 4.7k
RV305	1-241-784-11	s	RES, ADJ METAL 4.7k
RV306	1-241-762-11	s	RES, ADJ METAL 2.2k
RV501	1-241-761-11	s	RES, ADJ METAL 1k

(VRA-5AP BOARD(for UVW-1400P, PAL))

Ref. No. or Q'ty	Part No.	SP	Description	
RV502	1-241-762-11	s	RES, ADJ METAL 2.2k	
RV503	1-241-762-11	s	RES, ADJ METAL 2.2k	
RV602	1-241-763-11	s	RES, ADJ METAL 4.7k	
RV603	1-241-763-11	s	RES, ADJ METAL 4.7k	
RV701	1-241-760-11	s	RES, ADJ METAL 470	
RV702	1-241-761-11	s	RES, ADJ METAL 1k	
RV703	1-241-761-11	s	RES, ADJ METAL 1k	
S201	1-571-275-31	s	SWITCH, SLIDE	
*S202	1-553-977-00	s	SWITCH, SLIDE	*32
X301	1-579-057-11	s	CRYSTAL 17.734475MHz	
X302	1-760-183-21	s	CRYSTAL 10.664135MHz	

Note: In this list * marked parts are design changed.
Refer to pages 18-29 to 18-31 for applicable serial numbers.

AC BOARD/SOPS-1045(for NTSC)

Ref. No. or Q'ty	Part No.	SP	Description
1pc	⚠ 1-413-889-11	s	REGULATOR, SWITCHING (SOPS-1045)

All of component parts on the AC board are supplied together when you order switching regulator, SOPS-1045.
Therefore, all of component parts on the board should be critical to safe operation.

1pc	1-649-934-11	o	PRINTED CIRCUIT BOARD, AC
1pc	1-533-217-31	s	HOLDER, FUSE
1pc	1-580-375-11	s	INLET 3P
3pcs	4-382-854-01	s	SCREW, PSW M3x8
1pc	7-682-961-01	s	SCREW, +PSW4x8
C151	1-161-740-00	s	CERAMIC 470pF 10% 400V
C152	1-161-740-00	s	CERAMIC 470pF 10% 400V
C153	1-161-740-00	s	CERAMIC 470pF 10% 400V
C154	1-161-740-00	s	CERAMIC 470pF 10% 400V
C155	1-136-472-11	s	FILM 0.1uF 20% 250V
C155	1-136-212-12	s	FILM 0.1uF 20% 250V
C156	1-136-472-11	s	FILM 0.1uF 20% 250V
C156	1-136-212-12	s	FILM 0.1uF 20% 250V
CN151	1-564-215-11	o	PIN, CONNECTOR 4P
F151	1-532-746-11	s	FUSE 4A 125V
L151	1-424-353-11	s	FILTER, LINE
L152	1-424-255-11	s	COIL, CHOKE 10UH
L153	1-424-255-11	s	COIL, CHOKE 10UH
L203	1-406-953-11	s	COIL, CHOKE 30uH
R155	1-202-849-00	s	COMP 820k 10% 1/2W
VZ151	1-809-337-41	s	VARISTOR ENC471D-07AW

AC BOARD/SOPS-1046(for PAL)

Ref. No. or Q'ty	Part No.	SP	Description
1pc	⚠ 1-413-925-12	s	REGULATOR, SWITCHING (SOPS-1046)

All of component parts on the AC board are supplied together when you order switching regulator, SOPS-1046.
Therefore, all of components parts on the board should be critical to safe operation.

1pc	1-533-217-31	s	HOLDER, FUSE
1pc	1-580-375-11	s	INLET 3P
3pcs	4-382-854-01	s	SCREW, PSW M3x8
1pc	7-682-961-01	s	SCREW, +PSW4x8
C151	1-161-742-00	s	CERAMIC 0.0022uF 20% 400V
C152	1-161-742-00	s	CERAMIC 0.0022uF 20% 400V
C153	1-161-742-00	s	CERAMIC 0.0022uF 20% 400V
C154	1-161-742-00	s	CERAMIC 0.0022uF 20% 400V
C155	1-136-472-11	s	FILM 0.1uF 20% 250V
C155	1-136-212-12	s	FILM 0.1uF 20% 250V
C156	1-136-472-11	s	FILM 0.1uF 20% 250V
C156	1-136-212-12	s	FILM 0.1uF 20% 250V
CN151	1-564-215-11	o	CONNECTOR 4P, MALE
F151	1-576-228-11	s	FUSE 2A 250V
L151	1-424-353-11	s	FILTER, LINE
L153	1-424-614-11	s	COIL, CHOKE
L154	1-421-622-11	s	TRANSFORMER, LINE FILTER
R155	1-202-849-00	s	COMP 820k 10% 1/2W
VZ151	1-809-337-41	s	VARISTOR ENC471D-07AW

Note: In this list * marked parts are design changed.
Refer to pages 18-29 to 18-31 for applicable serial numbers.

M BOARD/SOPS-1045(for NTSC)

Ref. No. or Q'ty	Part No.	SP	Description
1pc	⚠ 1-413-889-11	s	REGULATOR, SWITCHING (SOPS-1045)

All of component parts on the M board are supplied together when you order switching regulator, SOPS-1045. Therefore, all of component parts on the board should be critical to safe operation.

1pc	1-649-935-11	o	PRINTED CIRCUIT BOARD, M
1pc	1-543-060-00	s	BEAD, FERRITE
1pc	1-543-923-11	s	BEAD, FERRITE
C106	1-136-185-00	s	FILM 0.22uF 20% 250V
C107	1-161-742-00	s	CERAMIC 0.0022uF 20% 400V
C108	1-161-742-00	s	CERAMIC 0.0022uF 20% 400V
C113	1-125-715-11	s	ELECT 820uF 20% 200V
C114	1-136-206-11	s	FILM 0.033uF 10% 630V
C115	1-136-165-00	s	FILM 0.1uF 5% 50V
C116	1-124-478-11	s	ELECT 100uF 20% 25V
C117	1-124-477-11	s	ELECT 47uF 20% 25V
C118	1-130-487-00	s	MYLAR 0.022uF 5% 50V
C119	1-136-153-00	s	FILM 0.01uF 5% 50V
C120	1-130-048-00	s	FILM 220pF 5% 50V
C121	1-136-165-00	s	FILM 0.1uF 5% 50V
C122	1-124-927-11	s	ELECT 4.7uF 20% 100V
C123	1-161-742-00	s	CERAMIC 0.0022uF 20% 400V
C124	1-161-741-00	s	CERAMIC 1000pF 20% AC400V
C125	1-161-741-00	s	CERAMIC 1000pF 20% AC400V
C126	1-162-117-11	s	CERAMIC 100pF 10% 500V
C201	1-164-645-11	s	CERAMIC 1000pF 10% 500V
C202	1-164-645-11	s	CERAMIC 1000pF 10% 500V
C203	1-128-102-11	s	ELECT 1200uF 20% 16V
C204	1-128-585-11	s	ELECT 270uF 20% 16V
C206	1-164-646-11	s	CERAMIC 2200pF 10% 500V
C207	1-164-646-11	s	CERAMIC 2200pF 10% 500V
C208	1-128-102-11	s	ELECT 1200uF 20% 16V
C209	1-126-987-11	s	ELECT 220uF 20% 10V
C211	1-164-646-11	s	CERAMIC 2200pF 10% 500V
C212	1-164-646-11	s	CERAMIC 2200pF 10% 500V
C213	1-128-102-11	s	ELECT 1200uF 20% 16V
C214	1-126-987-11	s	ELECT 220uF 20% 10V
C215	1-136-165-00	s	FILM 0.1uF 5% 50V
C216	1-164-646-11	s	CERAMIC 2200pF 10% 500V
C217	1-164-646-11	s	CERAMIC 2200pF 10% 500V
C218	1-128-102-11	s	ELECT 1200uF 20% 16V
C219	1-126-987-11	s	ELECT 220uF 20% 10V
C220	1-136-165-00	s	FILM 0.1uF 5% 50V
C221	1-164-645-11	s	CERAMIC 1000pF 10% 500V
C222	1-164-645-11	s	CERAMIC 1000pF 10% 500V
C223	1-128-102-11	s	ELECT 1200uF 20% 16V
C225	1-128-584-11	s	ELECT 120uF 20% 16V
C226	1-128-585-11	s	ELECT 270uF 20% 16V
C228	1-128-585-11	s	ELECT 270uF 20% 16V
C230	1-130-489-00	s	MYLAR 0.033uF 5% 50V
C231	1-136-169-00	s	MYLAR 0.22uF 5% 50V
C232	1-130-483-00	s	MYLAR 0.01uF 5% 50V
C233	1-136-157-00	s	FILM, CHIP 0.022uF 5% 50V
CN101	1-564-216-00	o	CONNECTOR, VH 5P, MALE
CN102	1-564-215-11	o	PIN, CONNECTOR 4P
CN103	1-564-321-00	o	CONNECTOR, VH 2P, MALE
CN201	1-564-932-11	o	CONNECTOR, 9P

(M BOARD/SOPS-1045(for NTSC))

Ref. No. or Q'ty	Part No.	SP	Description
D101	8-719-510-71	s	DIODE D10XB60
D102	8-719-313-16	s	DIODE AU02A
D103	8-719-911-19	s	DIODE 1SS119
D104	8-719-510-26	s	DIODE D1NL20
D105	8-719-510-26	s	DIODE D1NL20
D106	8-719-510-26	s	DIODE D1NL20
D107	8-719-911-19	s	DIODE 1SS119
D108	8-719-109-84	s	DIODE RD5.1ES-B1
D109	8-719-911-19	s	DIODE 1SS119
D110	8-719-109-89	s	DIODE RD5.6ES-B2
D201	8-719-510-12	s	DIODE D10SC4M
D202	8-719-510-39	s	DIODE D10LC20U
D203	8-719-510-39	s	DIODE D10LC20U
D204	8-719-988-31	s	DIODE D10SC6MR
D205	8-719-025-11	s	DIODE D8LC20UR
D206	8-719-027-20	s	DIODE D3S4M-F
D208	8-719-911-19	s	DIODE 1SS119
D209	8-719-109-88	s	DIODE RD5.6ES-B1
D210	8-719-911-19	s	DIODE 1SS119
D211	8-719-110-12	s	DIODE RD9.1ES-B1
D213	8-719-110-42	s	DIODE RD15ES-B3
D214	8-719-110-52	s	DIODE RD20ES-B1
IC101	8-759-520-23	s	IC FA5304P
IC102	8-719-028-92	s	PHOTO-COUPLER PS2652-P-V
IC103	8-719-028-92	s	PHOTO-COUPLER PS2652-P-V
IC103	8-719-820-67	s	PHOTOCOUPLER TLP634GB-LF2
IC201	8-759-604-49	s	IC M5F7909L
IC202	8-759-908-15	s	IC TL431CLP
L101	1-424-389-11	s	FILTER, LINE
L103	1-412-552-11	s	INDUCTOR 2.2mH
L201	1-406-929-11	s	COIL, CHOKE
L202	1-424-254-31	s	COIL, CHOKE 4.7UH
L203	1-406-953-11	s	COIL, CHOKE 30uH
L204	1-424-255-11	s	COIL, CHOKE 10UH
L205	1-424-254-31	s	COIL, CHOKE 4.7UH
L206	1-424-255-11	s	COIL, CHOKE 10UH
L207	1-406-929-11	s	COIL, CHOKE
L208	1-424-255-11	s	COIL, CHOKE 10UH
Q101	8-729-321-75	s	TRANSISTOR 2SK1400A
Q201	8-729-900-80	s	TRANSISTOR DTC114ES
R102	1-217-785-11	s	WIREWOUND 15 5% 5W
R103	1-260-129-91	s	CARBON 330k 5% 1/2W
R104	1-215-902-11	s	METAL 47k 5% 2W
R105	1-215-902-11	s	METAL 47k 5% 2W
R106	1-215-902-11	s	METAL 47k 5% 2W
R107	1-249-404-00	s	CARBON 82 5% 1/4W
R108	1-249-394-11	s	CARBON 12 5% 1/4W
R109	1-249-441-11	s	CARBON 100k 5% 1/4W
R110	1-249-395-11	s	CARBON 15 5% 1/4W
R111	1-249-397-11	s	CARBON 22 5% 1/4W
R112	1-249-381-11	s	CARBON 1 5% 1/4W
R113	1-249-395-11	s	CARBON 15 5% 1/4W
R114	1-249-429-11	s	CARBON 10k 5% 1/4W
R115	1-249-421-11	s	CARBON 2.2k 5% 1/4W
R116	1-247-903-00	s	CARBON 1M 5% 1/4W
R117	1-215-902-11	s	METAL 47k 5% 2W

Note: In this list * marked parts are design changed.
Refer to pages 18-29 to 18-31 for applicable serial numbers.

(M BOARD/SOPS-1045(for NTSC))

Ref. No. or Q'ty	Part No.	SP	Description
R118	1-249-436-11	s	CARBON 39k 5% 1/4W
R201	1-215-882-00	s	METAL 22 5% 2W
R202	1-215-882-00	s	METAL 22 5% 2W
R203	1-215-882-00	s	METAL 22 5% 2W
R204	1-215-882-00	s	METAL 22 5% 2W
R205	1-215-882-00	s	METAL 22 5% 2W
R206	1-249-419-11	s	CARBON 1.5k 5% 1/4W
R209	1-215-429-00	s	METAL 2.2k 1% 1/6W
R210	1-215-433-00	s	METAL 3.3k 1% 1/6W
R212	1-249-413-11	s	CARBON 470 5% 1/4W
R213	1-249-405-11	s	CARBON 100 5% 1/4W
R214	1-249-433-11	s	CARBON 22k 5% 1/4W
RV201	1-237-500-21	s	RES, ADJ METAL 1K
RY101	1-515-864-11	s	RELAY
T101	1-423-874-11	s	TRANSFORMER, CONVERTER
T102	1-424-573-11	s	TRANSFORMER, CURRENT

M BOARD/SOPS-1046(for PAL)

Ref. No. or Q'ty	Part No.	SP	Description
1pc	⚠ 1-413-925-12	s	REGULATOR, SWITCHING (SOPS-1046)

All of component parts on the M board are supplied together when you order switching regulator, SOPS-1046. Therefore, all of components parts on the board should be critical to safe operation.

1pc	1-543-060-00	s	BEAD, FERRITE
1pc	1-543-923-11	s	BEAD, FERRITE
C106	1-136-185-00	s	FILM 0.22uF 20% 250V
C107	1-161-741-00	s	CERAMIC 1000pF 20% 400V
C108	1-161-741-00	s	CERAMIC 1000pF 20% 400V
C113	1-125-731-11	s	ELECT 270MF 20% 400V
C114	1-136-206-11	s	FILM 0.033uF 10% 630V
C115	1-136-165-00	s	FILM 0.1uF 5% 50V
C116	1-124-478-11	s	ELECT 100uF 20% 25V
C117	1-124-478-11	s	ELECT 100uF 20% 25V
C118	1-136-157-00	s	FILM 0.022uF 5% 50V
C119	1-136-153-00	s	FILM 0.01uF 5% 50V
C120	1-130-048-00	s	FILM 220pF 5% 50V
C121	1-136-165-00	s	FILM 0.1uF 5% 50V
C122	1-124-927-11	s	ELECT 4.7uF 20% 100V
C123	1-161-742-00	s	CERAMIC 0.0022uF 20% 400V
C124	1-161-742-00	s	CERAMIC 0.0022uF 20% 400V
C125	1-161-742-00	s	CERAMIC 0.0022uF 20% 400V
C126	1-102-002-00	s	CERAMIC 680pF 10% 500V
C201	1-164-645-11	s	CERAMIC 1000pF 10% 500V
C202	1-164-645-11	s	CERAMIC 1000pF 10% 500V
C203	1-128-102-11	s	ELECT 1200uF 20% 16V
C204	1-128-585-11	s	ELECT 270uF 20% 16V
C206	1-164-646-11	s	CERAMIC 2200pF 10% 500V
C207	1-164-646-11	s	CERAMIC 2200pF 10% 500V
C208	1-128-102-11	s	ELECT 1200uF 20% 16V
C209	1-126-987-11	s	ELECT 220uF 20% 10V
C211	1-164-646-11	s	CERAMIC 2200pF 10% 500V
C212	1-164-646-11	s	CERAMIC 2200pF 10% 500V
C213	1-128-102-11	s	ELECT 1200uF 20% 16V
C214	1-126-987-11	s	ELECT 220uF 20% 10V
C215	1-136-165-00	s	FILM 0.1uF 5% 50V
C216	1-164-646-11	s	CERAMIC 2200pF 10% 500V
C217	1-164-646-11	s	CERAMIC 2200pF 10% 500V
C218	1-128-102-11	s	ELECT 1200uF 20% 16V
C219	1-126-987-11	s	ELECT 220uF 20% 10V
C220	1-136-165-00	s	FILM 0.1uF 5% 50V
C221	1-164-645-11	s	CERAMIC 1000pF 10% 500V
C222	1-164-645-11	s	CERAMIC 1000pF 10% 500V
C223	1-128-102-11	s	ELECT 1200uF 20% 16V
C225	1-128-584-11	s	ELECT 120uF 20% 16V
C226	1-128-585-11	s	ELECT 270uF 20% 16V
C228	1-128-585-11	s	ELECT 270uF 20% 16V
C230	1-130-489-00	s	MYLAR 0.033uF 5% 50V
C231	1-136-169-00	s	MYLAR 0.22uF 5% 50V
C232	1-130-483-00	s	MYLAR 0.01uF 5% 50V
C233	1-136-157-00	s	FILM 0.022uF 5% 50V
CN101	1-564-216-00	o	CONNECTOR, VH 5P, MALE
CN102	1-564-215-11	o	CONNECTOR 4P, MALE
CN103	1-564-321-00	o	CONNECTOR, VH 2P, MALE
CN201	1-564-932-11	o	CONNECTOR 9P, MALE

Note: In this list * marked parts are design changed.
Refer to pages 18-29 to 18-31 for applicable serial numbers.

(M BOARD/SOPS-1046(for PAL))

Ref. No. or Q'ty	Part No.	SP	Description
D101	8-719-510-71	s	DIODE D10XB60
D102	8-719-313-16	s	DIODE AU02A
D103	8-719-911-19	s	DIODE 1SS119
D104	8-719-510-26	s	DIODE D1NL20
D105	8-719-510-26	s	DIODE D1NL20
D106	8-719-313-16	s	DIODE AU02A
D107	8-719-911-19	s	DIODE 1SS119
D108	8-719-109-84	s	DIODE RD5.1ES-B1
D109	8-719-911-19	s	DIODE 1SS119
D110	8-719-109-89	s	DIODE RD5.6ES-B2
D201	8-719-510-12	s	DIODE D10SC4M
D202	8-719-510-39	s	DIODE D10LC20U
D203	8-719-510-39	s	DIODE D10LC20U
D204	8-719-988-31	s	DIODE D10SC6MR
D205	8-719-025-11	s	DIODE D8LC20UR
D206	8-719-027-20	s	DIODE D3S4M-F
D208	8-719-911-19	s	DIODE 1SS119
D209	8-719-109-88	s	DIODE RD5.6ES-B1
D210	8-719-911-19	s	DIODE 1SS119
D211	8-719-110-12	s	DIODE RD9.1ES-B1
D213	8-719-110-42	s	DIODE RD15ES-B3
D214	8-719-110-52	s	DIODE RD20ES-B1
IC101	8-759-520-23	s	IC FA5304P
IC102	8-719-028-92	s	PHOTO-COUPLER PS2652-P-V
IC103	8-719-028-92	s	PHOTO-COUPLER PS2652-P-V
IC201	8-759-604-49	s	IC M5F7909L
IC202	8-759-908-15	s	IC TL431CLP
L101	1-423-974-11	s	FILTER, LINE
L103	1-412-552-11	s	INDUCTOR 2.2mH
L201	1-406-929-11	s	COIL, CHOKE
L202	1-424-254-31	s	COIL, CHOKE 4.7UH
L203	1-406-531-11	s	COIL, CHOKE 30uH
L204	1-424-255-11	s	COIL, CHOKE 10UH
L205	1-424-254-31	s	COIL, CHOKE 4.7UH
L206	1-424-255-11	s	COIL, CHOKE 10UH
L207	1-406-929-11	s	COIL, CHOKE
L208	1-424-255-11	s	COIL, CHOKE 10UH
Q101	8-729-322-18	s	TRANSISTOR 2SK1402A
Q201	8-729-900-80	s	TRANSISTOR DTC114ES
R102	1-217-785-11	s	WIREWOUND 15 5% 5W
R103	1-260-127-11	s	CARBON 220k 5% 1/2W
R104	1-215-904-11	s	METAL 100k 5% 2W
R105	1-215-904-11	s	METAL 100k 5% 2W
R106	1-215-902-11	s	METAL 47k 5% 2W
R107	1-215-374-00	s	METAL 11 1% 1/6W
R108	1-249-394-11	s	CARBON 12 5% 1/4W
R109	1-249-441-11	s	CARBON 100k 5% 1/4W
R110	1-249-390-11	s	CARBON 5.6 5% 1/4W
R111	1-249-397-11	s	CARBON 22 5% 1/4W
R112	1-249-381-11	s	CARBON 1 5% 1/4W
R113	1-249-398-11	s	CARBON 27 5% 1/4W
R114	1-249-429-11	s	CARBON 10k 5% 1/4W
R115	1-249-421-11	s	CARBON 2.2k 5% 1/4W
R116	1-247-903-00	s	CARBON 1M 5% 1/4W
R117	1-215-902-11	s	METAL 47k 5% 2W
R118	1-249-436-11	s	CARBON 39k 5% 1/4W
R119	1-260-127-11	s	CARBON 220k 5% 1/2W
R201	1-215-882-00	s	METAL 22 5% 2W

(M BOARD/SOPS-1046(for PAL))

Ref. No. or Q'ty	Part No.	SP	Description
R202	1-215-882-00	s	METAL 22 5% 2W
R203	1-215-882-00	s	METAL 22 5% 2W
R204	1-215-882-00	s	METAL 22 5% 2W
R205	1-215-882-00	s	METAL 22 5% 2W
R206	1-249-419-11	s	CARBON 1.5k 5% 1/4W
R209	1-215-429-00	s	METAL 2.2k 1% 1/6W
R210	1-215-433-00	s	METAL 3.3k 1% 1/6W
R212	1-249-413-11	s	CARBON 470 5% 1/4W
R213	1-247-807-31	s	CARBON 100 5% 1/4W
R214	1-249-433-11	s	CARBON 22k 5% 1/4W
RV201	1-237-500-21	s	RES, ADJ METAL 1k
RY101	1-515-864-11	s	RELAY
T101	1-426-623-11	s	TRANSFORMER CONVERTER
T102	1-424-573-11	s	TRANSFORMER, CURRENT

Note: In this list * marked parts are design changed.
Refer to pages 18-29 to 18-31 for applicable serial numbers.

FRAME LIST

Ref. No. or Q'ty	Part No.	SP	Description
1pc	A-8263-056-A	s	DRUM ASSY, DBH-43A-R (for UVW-1400)
1pc	A-8263-055-A	s	UPPER DRUM ASSY, DBR-43-R (for UVW-1400)
1pc	A-8263-058-A	s	DRUM ASSY, DBH-44A-R (for UVW-1400P)
1pc	A-8263-057-A	s	UPPER DRUM ASSY, DBR-44-R (for UVW-1400P)
1pc	A-8260-976-A	s	DRUM ASSY, DBH-41A-R (for UVW-1200)
1pc	A-8260-977-A	s	UPPER DRUM ASSY, DBR-41-R (for UVW-1200)
1pc	A-8260-978-A	s	DRUM ASSY, DBH-42A-R (for UVW-1200P)
1pc	A-8260-979-A	s	UPPER DRUM ASSY, DBR-42-R (for UVW-1200P)
1pc	⚠ 1-413-889-11	s	REGULATOR, SWITCHING (SOPS-1045) (for NTSC)
1pc	⚠ 1-413-925-12	s	REGULATOR, SWITCHING (SOPS-1046) (for PAL)
1pc	⚠ 1-467-557-11	s	CONVERTER, DC-DC (for UVW-1200/1200P)
1pc	1-690-106-12	s	WIRE, FLEXIBLE CARD 5P
1pc	⚠ 1-810-374-11	s	UNIT, FLD (for UVW-1400/1400P)
1pc	1-810-381-11	s	SENSOR, CONDENSATION
H1001	8-825-779-11	s	HEAD, PS244-2103H(for UVW-1400/1400P)
	8-825-778-91	s	HEAD, PS244-2103G(for UVW-1200/1200P)
H1002	8-825-554-83	s	HEAD, CTL PS244-21B
H1003	8-825-770-74	s	HEAD, FE EF291-21
L1001	1-543-316-31	s	HEAD, SENSING "TAPE END SENSOR"
L1002	1-543-316-31	s	HEAD, SENSING "TAPE TOP SENSOR"
M1001	1-698-152-11	s	MOTOR, DC (SVD-1449) "THREADING"
M1002	1-698-152-11	s	MOTOR, DC (SVD-1449) "CASSETTE"
M1003	A-8323-773-A	s	MOTOR ASSY (RP), REEL "S-REEL"
M1004	A-8323-773-A	s	MOTOR ASSY (RP), REEL "T-REEL"
M1005	1-698-179-12	s	MOTOR, DC "CAPSTAN"
M1006	1-698-152-11	s	MOTOR, DC (SVD-1449) "POSITION"
PM1001	1-454-338-00	s	SOLENOID "PINCH"
PM1002	1-454-417-41	s	SOLENOID "S-BRAKE"
PM1003	1-454-417-41	s	SOLENOID "T-BRAKE"
S1001	⚠ 1-570-117-31	s	SWITCH, ROCKER "AC POWER"

FRAME, HARNESS, CONNECTOR & CONTACT LIST

Ref. No. or Q'ty	Part No.	SP	Description
to ACE ASSY			
CN922F	1-568-819-11	o	HOUSING 9P
9pcs	1-565-977-11	s	CONTACT, FEMALE AWG28-32
to AP-31B/31BP board (for UVW-1400/1400P only)			
CN1F	1-569-196-41	o	HOUSING 3P
1pc	1-569-191-11	o	CONTACT, FEMALE AWG22-26
2pcs	1-569-193-11	o	CONTACT, FEMALE
CN2F	1-569-196-31	o	HOUSING 3P
1pc	1-569-191-11	o	CONTACT, FEMALE AWG22-26
2pcs	1-569-193-11	o	CONTACT, FEMALE
CN3F	1-569-196-11	o	HOUSING 3P
1pc	1-569-191-11	o	CONTACT, FEMALE AWG22-26
2pcs	1-569-193-11	o	CONTACT, FEMALE
to AP-34/34P board (for UVW-1200/1200P only)			
CN1F	1-569-199-31	o	HOUSING 6P
2pcs	1-569-191-11	o	CONTACT, FEMALE AWG22-26
4pcs	1-569-193-11	o	CONTACT, FEMALE
CN2F	1-569-208-11	o	HOUSING 15P
15pcs	1-569-193-21	o	CONTACT, FEMALE
CN3F	1-562-152-11	o	HOUSING 7P
7pcs	1-564-026-00	o	CONTACT, FEMALE AWG26-30
CN4F	1-562-155-11	o	HOUSING 10P
10pcs	1-564-026-00	o	CONTACT, FEMALE AWG26-30
CN5F	1-569-199-21	o	HOUSING 6P
2pcs	1-569-192-21	o	CONTACT, FEMALE AWG22-26
4pcs	1-569-194-21	o	CONTACT, FEMALE AWG24-30
CN6F	1-569-199-41	o	HOUSING 6P
2pcs	1-569-192-21	o	CONTACT, FEMALE AWG22-26
4pcs	1-569-194-21	o	CONTACT, FEMALE AWG24-30
CN7F	1-562-157-11	o	HOUSING 12P
12pcs	1-564-026-00	o	CONTACT, FEMALE AWG26-30
CN8F	1-569-196-11	o	HOUSING 3P
1pc	1-569-191-11	o	CONTACT, FEMALE AWG22-26
2pcs	1-569-193-11	o	CONTACT, FEMALE
to AR-14A/14AP board (for UVW-1400/1400P only)			
CN1F	1-569-202-11	o	HOUSING 9P
3pcs	1-569-191-11	o	CONTACT, FEMALE AWG22-26
6pcs	1-569-193-11	o	CONTACT, FEMALE
to AUDIO LEVEL METER (for UVW-1400/1400P only)			
CN1F	1-559-586-11	o	WIRE, FLEXIBLE CARD 20P
CN2F	1-559-586-11	o	WIRE, FLEXIBLE CARD 20P
to CAPSTAN MOTOR CONTROL BLOCK			
CN8F	1-562-153-11	o	HOUSING 8P
8pcs	1-564-026-00	o	CONTACT, FEMALE AWG26-30
to CASSETTE			
CN930F	1-562-157-11	o	HOUSING 12P
12pcs	1-564-026-00	o	CONTACT, FEMALE AWG26-30

Note: In this list * marked parts are design changed.
Refer to pages 18-29 to 18-31 for applicable serial numbers.

(FRAME, HARNESS, CONNECTOR & CONTACT LIST)

Ref. No. or Q'ty	Part No.	SP	Description
to CP-225B/225C board			
			CP-225B: UVW-1400/1400P
			CP-225C: UVW-1200/1200P
CN652F	1-562-152-11	o	HOUSING 7P
7pcs	1-564-026-00	o	CONTACT, FEMALE AWG26-30
CN654F(for UVW-1400/1400P only)			
	1-562-157-11	o	HOUSING 12P
12pcs	1-564-026-00	o	CONTACT, FEMALE AWG26-30
CN655F	1-562-185-11	o	HOUSING 14P
14pcs	1-564-026-00	o	CONTACT, FEMALE AWG26-30
CN656F	1-562-147-11	o	HOUSING 2P
2pcs	1-564-026-00	o	CONTACT, FEMALE AWG26-30
to CP-226/226A board			
			CP-226: UVW-1400/1400P
			CP-226A: UVW-1200/1200P
CN274F	1-562-152-11	o	HOUSING 7P
7pcs	1-564-026-00	o	CONTACT, FEMALE AWG26-30
CN275F(for UVW-1400/1400P only)			
	1-562-151-11	o	HOUSING 6P
6pcs	1-564-026-00	o	CONTACT, FEMALE AWG26-30
CN276F	1-562-147-11	o	HOUSING 2P
2pcs	1-564-026-00	o	CONTACT, FEMALE AWG26-30
to CP-239 board			
CN532F	1-575-733-11	s	CABLE, FLAT 17P
to DR-214 board			
CN301F	1-558-261-31	s	WIRE, FLEXIBLE CARD 30P
CN302F	1-558-261-31	s	WIRE, FLEXIBLE CARD 30P
CN303F	1-558-261-31	s	WIRE, FLEXIBLE CARD 30P
to DRUM ASSY			
CN1F	1-580-938-11	o	HOUSING 15P
15pcs	1-565-740-11	o	CONTACT, FEMALE AWG24-30
CN911F	1-569-199-11	o	HOUSING 6P
2pcs	1-569-192-11	o	CONTACT, FEMALE AWG22-26
4pcs	1-569-194-11	o	CONTACT, FEMALE AWG24-30
CN912F	1-569-199-31	o	HOUSING 6P
2pcs	1-569-192-11	o	CONTACT, FEMALE AWG22-26
4pcs	1-569-194-11	o	CONTACT, FEMALE AWG24-30
to DUS-355 board			
CN934F	1-569-195-11	s	HOUSING 2P
2pcs	1-569-193-11	o	CONTACT, FEMALE
to HP-61 board			
CN401F	1-562-155-11	o	HOUSING 10P
10pcs	1-564-026-00	o	CONTACT, FEMALE AWG26-30
CN403F	1-562-148-11	o	HOUSING 3P
3pcs	1-564-026-00	o	CONTACT, FEMALE AWG26-30

(FRAME, HARNESS, CONNECTOR & CONTACT LIST)

Ref. No. or Q'ty	Part No.	SP	Description
to KY-290/290A board			
			KY-290: UVW-1400/1400P
			KY-290A: UVW-1200/1200P
CN590F	1-562-958-11	o	HOUSING 15P
15pcs	1-564-026-00	o	CONTACT, FEMALE AWG26-30
CN591F(for UVW-1400/1400P only)			
	1-559-586-11	o	WIRE, FLEXIBLE CARD 20P
CN592F(for UVW-1400/1400P only)			
	1-562-149-11	o	HOUSING 4P
4pcs	1-564-026-00	o	CONTACT, FEMALE AWG26-30
CN593F(for UVW-1400/1400P only)			
	1-559-586-11	o	WIRE, FLEXIBLE CARD 20P
to MB-471B board (for UVW-1400/1400P only)			
CN251F	1-562-511-11	o	HOUSING 9P
9pcs	1-562-490-11	o	CONTACT, FEMALE AWG22-28
CN261F	1-562-157-11	o	HOUSING 12P
12pcs	1-564-026-00	o	CONTACT, FEMALE AWG26-30
CN265F	1-562-148-11	o	HOUSING 3P
3pcs	1-564-026-00	o	CONTACT, FEMALE AWG26-30
CN274F	1-562-152-11	o	HOUSING 7P
7pcs	1-564-026-00	o	CONTACT, FEMALE AWG26-30
CN275F	1-562-151-11	o	HOUSING 6P
6pcs	1-564-026-00	o	CONTACT, FEMALE AWG26-30
CN276F	1-562-151-11	o	HOUSING 6P
6pcs	1-564-026-00	o	CONTACT, FEMALE AWG26-30
CN277F	1-562-149-11	o	HOUSING 4P
4pcs	1-564-026-00	o	CONTACT, FEMALE AWG26-30
CN278F	1-562-155-11	o	HOUSING 10P
10pcs	1-564-026-00	o	CONTACT, FEMALE AWG26-30
CN281F	1-751-632-11	s	WIRE, FLEXIBLE CARD 34P
to MB-520/520P/520A/520AP board			
			MB-520: UVW-1400
			MB-520P: UVW-1400P
			MB-520A: UVW-1200
			MB-520AP: UVW-1200P
CN200F	1-562-800-11	o	HOUSING 9P
9pcs	1-562-210-11	o	CONTACT, FEMALE AWG18-22
CN201F	1-562-511-11	o	HOUSING 9P
9pcs	1-562-490-11	o	CONTACT, FEMALE AWG22-28
CN211F(for UVW-1400/1400P only)			
	1-562-157-11	o	HOUSING 12P
12pcs	1-564-026-00	o	CONTACT, FEMALE AWG26-30
CN231F(for UVW-1400/1400P only)			
	1-751-632-11	s	WIRE, FLEXIBLE CARD 34P
CN232F	1-575-733-11	s	CABLE, FLAT 17P
CN233F(for UVW-1200/1200P only)			
	1-569-203-11	o	HOUSING 10P
1pc	1-569-191-11	o	CONTACT, FEMALE AWG22-26
9pcs	1-569-193-11	o	CONTACT, FEMALE

Note: In this list * marked parts are design changed.
Refer to pages 18-29 to 18-31 for applicable serial numbers.

(FRAME, HARNESS, CONNECTOR & CONTACT LIST)

Ref. No. or Q'ty	Part No.	SP	Description
CN235F	1-562-148-11	o	HOUSING 3P
3pcs	1-564-026-00	o	CONTACT, FEMALE AWG26-30
CN262F	1-562-958-11	o	HOUSING 15P
15pcs	1-564-026-00	o	CONTACT, FEMALE AWG26-30
CN267F	1-562-152-11	o	HOUSING 7P
7pcs	1-564-026-00	o	CONTACT, FEMALE AWG26-30
CN268F	1-562-185-11	o	HOUSING 14P
14pcs	1-564-026-00	o	CONTACT, FEMALE AWG26-30
CN271F(for UVW-1400/1400P only)			
	1-562-157-11	o	HOUSING 12P
12pcs	1-564-026-00	o	CONTACT, FEMALE AWG26-30
to MS-39/39A board			
	MS-39: UVW-1400/1400P		
	MS-39A: UVW-1200/1200P		
CN350F	1-562-157-11	o	HOUSING 12P
12pcs	1-564-026-00	o	CONTACT, FEMALE AWG26-30
CN351F	1-562-149-11	o	HOUSING 4P
4pcs	1-564-026-00	o	CONTACT, FEMALE AWG26-30
CN352F	1-569-195-11	s	HOUSING 2P
2pcs	1-569-193-11	o	CONTACT, FEMALE
CN353F	1-562-152-11	o	HOUSING 7P
7pcs	1-564-026-00	o	CONTACT, FEMALE AWG26-30
CN354F	1-569-208-11	o	HOUSING 15P
15pcs	1-569-193-11	o	CONTACT, FEMALE
CN355F	1-562-153-11	o	HOUSING 8P
8pcs	1-564-026-00	o	CONTACT, FEMALE AWG26-30
CN356F	1-751-633-11	s	WIRE, FLEXIBLE CARD 13P
CN357F	1-751-634-11	s	WIRE, FLEXIBLE CARD 13P
CN358F	1-562-151-11	o	HOUSING 6P
6pcs	1-564-026-00	o	CONTACT, FEMALE AWG26-30
CN359F	1-562-149-11	o	HOUSING 4P
4pcs	1-564-026-00	o	CONTACT, FEMALE AWG26-30
CN360F	1-569-197-11	o	HOUSING 4P
4pcs	1-569-193-11	o	CONTACT, FEMALE
CN361F	1-569-196-11	o	HOUSING 3P
1pc	1-569-191-11	o	CONTACT, FEMALE AWG22-26
2pcs	1-569-193-11	o	CONTACT, FEMALE
CN362F	1-558-261-31	s	WIRE, FLEXIBLE CARD 30P
CN363F	1-558-261-31	s	WIRE, FLEXIBLE CARD 30P
CN364F	1-558-261-31	s	WIRE, FLEXIBLE CARD 30P
to PD-35 board			
CN851F	1-562-147-11	o	HOUSING 2P
2pcs	1-564-026-00	o	CONTACT, FEMALE AWG26-30
CN854F	1-562-151-11	o	HOUSING 6P
6pcs	1-564-026-00	o	CONTACT, FEMALE AWG26-30

(FRAME, HARNESS, CONNECTOR & CONTACT LIST)

Ref. No. or Q'ty	Part No.	SP	Description
to PTC-66 board			
CN944F	1-562-149-11	o	HOUSING 4P
4pcs	1-564-026-00	o	CONTACT, FEMALE AWG26-30
to PTC-67 board			
CN941F	1-562-152-11	o	HOUSING 7P
7pcs	1-564-026-00	o	CONTACT, FEMALE AWG26-30
CN942F	1-569-195-21	o	HOUSING 2P
2pcs	1-569-193-11	o	CONTACT, FEMALE
CN943F	1-562-147-11	o	HOUSING 2P
2pcs	1-564-026-00	o	CONTACT, FEMALE AWG26-30
to PTC-68 board			
CN940F	1-562-149-11	o	HOUSING 4P
4pcs	1-564-026-00	o	CONTACT, FEMALE AWG26-30
to RM-126 board			
CN946F	1-751-633-12	s	WIRE, FLEXIBLE CARD 13P
CN947F	1-569-197-11	o	HOUSING 4P
4pcs	1-569-193-11	o	CONTACT, FEMALE
to RM-127 board			
CN951F	1-751-634-12	s	WIRE, FLEXIBLE CARD 13P
CN952F	1-569-197-11	o	HOUSING 4P
4pcs	1-569-193-11	o	CONTACT, FEMALE
to RP-70B/70BP board (for UVW-1400/1400P only)			
CN1F	1-569-196-11	o	HOUSING 3P
1pc	1-569-192-11	o	CONTACT, FEMALE AWG22-26
2pcs	1-569-194-11	o	CONTACT, FEMALE AWG24-30
CN101F	1-569-196-31	o	HOUSING 3P
1pc	1-569-192-11	o	CONTACT, FEMALE AWG22-26
2pcs	1-569-194-11	o	CONTACT, FEMALE AWG24-30
CN201F	1-569-196-41	o	HOUSING 3P
1pc	1-569-192-11	o	CONTACT, FEMALE AWG22-26
2pcs	1-569-194-11	o	CONTACT, FEMALE AWG24-30
CN301F	1-569-196-21	o	HOUSING 3P
1pc	1-569-192-11	o	CONTACT, FEMALE AWG22-26
2pcs	1-569-194-11	o	CONTACT, FEMALE AWG24-30
to SE-207 board			
CN950F	1-569-619-11	o	HOUSING 4P
4pcs	1-565-977-11	s	CONTACT, FEMALE AWG28-32
to SWITCHING REGULATOR			
CN1F	⚠ 1-562-800-11	o	HOUSING 9P
9pcs	⚠ 1-562-210-11	o	CONTACT, FEMALE AWG18-22
CN101F	1-562-286-11	o	HOUSING 5P
2pcs	1-562-210-11	o	CONTACT, FEMALE AWG18-22
CN151F	1-562-285-11	o	HOUSING 4P
2pcs	1-562-210-11	o	CONTACT, FEMALE AWG18-22

Note: In this list * marked parts are design changed.
Refer to pages 18-29 to 18-31 for applicable serial numbers.

(FRAME, HARNESS, CONNECTOR & CONTACT LIST)

Ref. No. or Q'ty	Part No.	SP	Description
to TAPE END SENSOR			
CN938F	1-562-147-11	o	HOUSING 2P
2pcs	1-564-026-00	o	CONTACT, FEMALE AWG26-30
to TAPE TOP SENSOR			
CN939F	1-562-147-11	o	HOUSING 2P
2pcs	1-564-026-00	o	CONTACT, FEMALE AWG26-30
to TR-84 board			
CN945F	1-569-619-11	o	HOUSING 4P
4pcs	1-565-977-11	s	CONTACT, FEMALE AWG28-32
to VR-155 board (for UVW-1400/1400P only)			
CN402F	1-562-151-11	o	HOUSING 6P
6pcs	1-564-026-00	o	CONTACT, FEMALE AWG26-30

18-4. PACKING MATERIALS & SUPPLIED ACCESSORIES

Ref. No. or Q'ty	Part No.	SP	Description
1pc	1-590-910-11	s	CORD, AC POWER 3P (for EK)
1pc	1-551-812-11	s	CORD, POWER 3P (for UC)
1pc	1-557-161-11	s	CORD, POWER 2P (for J)
1pc	3-182-362-01	o	SPACER
1pc	3-182-442-02	o	CUSHION (BOTTOM)
1pc	3-182-443-03	o	CUSHION (TOP)
1pc	3-184-058-01	o	INDIVIDUAL CARTON (for UVW-1400P)
1pc	3-183-972-02	o	INDIVIDUAL CARTON (for UVW-1400)
1pc	3-183-977-02	o	INDIVIDUAL CARTON (for UVW-1200)
1pc	3-184-057-01	o	INDIVIDUAL CARTON (for UVW-1200P)
1pc	3-184-411-03	s	PROTOCOL MANUAL (for J)
1pc	3-184-411-13	s	PROTOCOL MANUAL (for UC, EK)
1pc	3-704-355-01	o	SHEET (STANDARD), PROTECTION
1pc	3-758-280-03	s	MANUAL, INSTRUCTION (for UVW-1400: Japanese)
1pc	3-758-280-23	s	MANUAL, INSTRUCTION (for UVW-1400/1400P: English & French)
1pc	3-758-280-43	s	MANUAL, INSTRUCTION (for UVW-1400/1400P: German & Italian)
1pc	3-758-279-03	s	MANUAL, INSTRUCTION (for UVW-1200: Japanese)
1pc	3-758-279-23	s	MANUAL, INSTRUCTION (for UVW-1200/1200P: English & French)
1pc	3-758-279-43	s	MANUAL, INSTRUCTION (for UVW-1200/1200P: German & Italian)
1pc	3-800-983-01	s	INSTRUCTION (for UC)

Note: In this list * marked parts are design changed.
Refer to pages 18-29 to 18-31 for applicable serial numbers.

18-5. OPTIONAL FIXTURES

Part No.	SP	Description
J-6001-820-A	o	DRUM ECCENTRICITY GAUGE (3)
J-6001-830-A	o	DRUM ECCENTRICITY GAUGE (2)
J-6001-840-A	o	DRUM ECCENTRICITY GAUGE (1)
or		
J-6325-530-A	o	DRUM ECCENTRICITY GAUGE (6)
J-6031-820-A	o	MULTI CONNECTOR CABLE (DIBNC)
J-6031-830-A	o	MULTI CONNECTOR CABLE (DOBNC)
J-6080-029-A	o	ADJUSTMENT MIRROR
J-6087-000-A	o	DRUM ECCENTRICITY GAUGE (5)
J-6150-960-A	o	REEL MOTOR SHAFT SLANTNESS CHECK FIXTURE
J-6152-450-A	o	WIRE CLEARANCE GAUGE
J-6320-680-A	o	REEL TABLE HEIGHT GAUGE
J-6320-880-A	o	CASSETTE BASE PLATE (L)
J-6321-500-A	o	TAPE GUIDE ADJUSTMENT DRIVER
J-6332-780-A	o	EXTENSION BOARD, EX-278
J-6332-790-A	o	EXTENSION BOARD, EX-279
J-6381-380-A	o	S CONNECTOR CABLE, EW703
2-034-697-00	o	CLEANING PIECE
3-703-360-09	o	PARALLEL PIN(3x32)
7-661-018-18	o	OIL
7-662-010-04	o	GREASE, SGL-505 (20 g)
7-700-736-01	o	L-SHAPED HEXAGONAL WRENCH (d:1.27 mm)
7-700-736-05	o	L-SHAPED HEXAGONAL WRENCH (d:1.5 mm)
7-700-736-06	o	L-SHAPED HEXAGONAL WRENCH (d:0.89 mm)
8-960-096-01	o	ALIGNMENT TAPE, CR2-1B(for NTSC)
8-960-096-41	o	ALIGNMENT TAPE, CR5-1B(for NTSC)
8-960-097-45	o	ALIGNMENT TAPE, CR8-1A
8-960-096-51	o	ALIGNMENT TAPE, CR2-1B PS(for PAL)
8-960-096-86	o	ALIGNMENT TAPE, CR8-1B PS(for PAL)
8-960-096-91	o	ALIGNMENT TAPE, CR5-1B PS(for PAL)
9-911-053-00	o	THICKNESS GAUGE
9-919-573-01	o	CLEANING FLUID
STANDARD PRODUCTS		TENTEL METER (T2-H7-SLC)

Note: In this list * marked parts are design changed.
Refer to pages 18-29 to 18-31 for applicable serial numbers.

UVW-1400
UVW-1400P
UVW-1200
UVW-1200P (J, UC, EK) J, E
9-977-570-23

Sony Corporation
B&P Company

Printed in Japan
2001. 7 08
©1993